Facility Engineering | 2019

S+S REGELTECHNIK



NEW

SENSOR TECHNOLOGY & FIELD DEVICES



Order Hotline: +49 (0) 911 / 519 47-0 | **Online** Shop: www.SplusS.de



The Ear to the Market

As one the leaders in demanding as well as cost-efficient building sensors, we at S+S Regeltechnik have a keen sense of important trends in the market. And an open ear to the needs of our customers.

Bus-capable multi-functional devices, for instance, are in greater demand than ever, which has resulted in the development of our flexible Modbus housing TYR 3 – engineered for ease of commissioning and convenient operation. The new TYR 2E stainless steel version comes into play where conditions are rough or require maximum hygiene.

Furthermore, we now also offer you our room air sensors for recessed in-wall mounting in the designs of various other panel switch brand manufacturers. In addition, our extended portfolio includes several multi-range pressure transducers with switchable I/U output.

You have a special challenge for us to meet? We will deliver!

Tino Schulze
Managing Director
S+S Regeltechnik GmbH®

Heiko Linke
Managing Director
S+S Regeltechnik GmbH®

S+S REGELTECHNIK

S+S REGELTECHNIK

S+S FOCUS 2019



TYR 2E

STAINLESS STEEL HOUSING
IN INDUSTRIAL DESIGN
FOR PROTECTION CLASS IP 67

» Page 13



TYR 3

3RD GENERATION
MODBUS HOUSING
WITH INNOVATIVE
FUNCTION BRACKET

» Pages 8 / 9

Modbus



AERASGARD®

ACTIVE AND MODBUS
CAPABLE ROOM SENSORS
FOR TEMPERATURE,
HUMIDITY AND CO_2

» Page 12

Modbus



RYMASKON®

MODBUS CAPABLE
ROOM CONTROLLERS

» Pages 10 / 11

Modbus

KYMASGARD®

NEW GENERATION
OF RADIO SENSORS
WITH ENOCEAN
TECHNOLOGY

» Page 442

enocean®

MODBUS-COMPATIBLE MEASURING TRANSDUCERS

Room control units

RYMASKON®200	Room control units for room automation	039
RYMASKON®400	Room control units for room automation	037
RFTF-Modbus-xx	Room control units, on-wall	041
RTM1-Modbus	Room control units, on-wall	043
RFTM-CO_2-Modbus-P	Room control units, on-wall	087
FSFTM-Modbus-xx	Room control units, in-wall	065/089

Temperature sensors

RTM1-Modbus	Room control units, on-wall	043
RPTM1-Modbus-T3	Pendulum room temperature sensor	059
RPTM2-Modbus-T3	Pendulum room temperature sensor	061
HFTM-Modbus-T3	Sleeve sensor	053
ALTM 1-Modbus-T3	Surface-contact temperature measuring transducer	055
ALTM 2-Modbus-T3	Surface-contact temperature measuring transducer	057
ATM 2-Modbus-T3	Outside temperature measuring transducer	045
TM 65-Modbus-T3	Immersion, duct, screw-in sensor	047
MWTM-Modbus-T3	Mean value temperature sensor	051

Humidity sensors

FSFTM-Modbus	Humidity and temperature sensor, in-wall	065
RFTF-Modbus	Room humidity and temperature sensor	063
RPFTF-Modbus-T3	Pendulum room humidity and temperature sensor	071
VFTF-Modbus-T3	Showcase humidity and temperature sensor	073
AFTF-Modbus-T3	Humidity and temperature sensor, on-wall	067
KFTF-Modbus-T3	Duct humidity and temperature sensor	069
TW-Modbus-T3	Dew point control switch	077

Pressure sensors

PREMASGARD® 232x-Modbus-T3	Pressure and differential pressure measuring transducers	081
PREMASGARD® 841x-Modbus	Duct humidity and temperature sensor with pressure measuring transducer	085

Air quality and CO_2 sensors

FSFTM-CO_2-Modbus	In-wall humidity, temperature, air quality and CO_2 sensor	089
RFTM-LQ-CO_2-Modbus	Room humidity, temperature, air quality and CO_2 sensor	087
AFTM-LQ-CO_2-Modbus	On-wall humidity, temperature, air quality and CO_2 sensor	093
KFTM-LQ-CO_2-Modbus	Duct humidity, temperature, air quality and CO_2 sensor	097

TEMPERATURE SENSORS PASSIVE

Room sensors

DTF	In-ceiling temperature sensor	121
RTF	Room temperature sensor, on-wall	102
FSTF	Room temperature sensor, in-wall	112
RPTF 1	Pendulum room temperature sensor	168
RPTF 2	Pendulum room temperature sensor	169
RSTF	Room radiation temperature sensor	171
RTF-xx	Room control units, on-wall	107
FSTF-xx	Room control units, in-wall	116

Cable sensors, surface-contact sensors, outdoor sensors

TF 43/65-F	Immersion/screw-in/duct sensor	135
HTF	Sleeve temperature sensor	158
OFTF	Surface temperature sensor	163
ALTF 1	Surface-contact temperature sensor	164
ALTF 2/02	Surface-contact temperature sensor	167/166
ATF 1/01	Outside temperature sensor	123/122
ATF 2	Outside temperature sensor	125

Duct, immersion, screw-in sensors

TF 43/65	Immersion/screw-in/duct sensor	130/128
TF 43/65-F	Immersion/screw-in/duct sensor with cable	135
TF 54	Immersion/screw-in/duct sensor	144
MWTF	Mean value temperature sensor	139
ETF 6	Screw-in sensor with neck tube	150
ETF 7	Screw-in sensor, fast-acting	141
RGTF 2	Smoke gas screw-in sensor	155
RGTF 1	Smoke gas duct sensor	153
HTF	Screw-in, duct, immersion sensor with cable	160

Radiation temperature sensors

ASTF	On-wall radiation temperature sensor	170
RSTF	Room radiation temperature sensor	171

TEMPERATURE SENSORS ACTIVE

Room sensors

RTM 1	Room temperature measuring transducer	175
FSTM	Room temperature sensor	177
RPTM 1	Pendulum room temperature measuring transducer	205
RPTM 2	Pendulum room temperature measuring transducer	207
HSM	Top hat rail measuring transducer	209

Cable sensors, surface-contact sensors, outdoor sensors

HFTM	Sleeve sensor with measuring transducer	199
ALTM 1	Surface-contact temperature measuring transducer	201
ALTM 2	Surface-contact temperature measuring transducer	203
ATM 2	Outside temperature measuring transducer	179

Duct, immersion, screw-in sensors

TM 43/65	Immersion /Duct temperature measuring transduce	183
TM 54	Immersion/duct temperature measuring transducer	191
RGTM 2	Smoke gas temperature measuring transducer	197
RGTM 1	Smoke gas temperature measuring transducer	195
MWTM	Mean value temperature measuring transducer	189

TEMPERATURE CONTROLLERS / THERMOSTATS

Room temperature controller

RTR-B	Room temperature controller	213
RTR-S	Room temperature controller, fan coil controller	215
RTR-E-UP	Room temperature controller, clock thermostat	219
TET	Top hat rail measuring transducer	251

Built-in controllers, duct controllers

ETR	Equipment temperature controller	227
KTR	Duct temperature controller	233
TR 040/060	Temperature controller	220
TR 22	Temperature controller	221
TR 04040	Temperature controller, two-step	222
TR xx-F	Temperature controller with remote sensor	223

Thermostats

ALTR xx	Surface-contact thermostats	236/237
FST	Frost protection thermostat, mechanical	241
FST-K	Duct frost protection thermostat, mechanical	245
FS	2-phase frost protection thermostat	249

HUMIDITY SENSORS HUMIDITY CONTROLLERS / HYGROSTATS

Room sensors

RFF/RFTF	Room humidity sensor, on-wall	259
FSFM/FSFTM	Room humidity sensor, in-wall	261
RPFF-SD	Pendulum room humidity sensor	291
RPFF/RPFTF	Pendulum room humidity sensor	295
RPFF/RPFTF-25	Pendulum room humidity sensor	299
VFF/VFTF	Showcase humidity and temperature sensor	303
DFF/DFTF	In-ceiling humidity and temperature sensor	265

Outdoor sensors

AFF/AFTF-SD	Outdoor humidity sensor	269
AFF/AFTF	Outdoor humidity sensor	274
AFF/AFTF-20/25	Outdoor humidity sensor	275
AAVTF	Outdoor humidity sensor	279

Duct sensors

KFF/KFTF-SD	Duct humidity sensor	284
KFF/KFTF	Duct humidity sensor	284
KFF/KFTF-20	Duct humidity sensor	285
KAVTF	Duct humidity sensor	289

Hygrostats

RH-2	Room hygrostat, one-step	305
KH-10	Duct hygrostat, one-step	317
KH-40	Duct hygrostat, one-step	319
AH-40	Outdoor hygrostat, one-step	311
RHT	Room hygrostat	304
RHT-30	Room hygrostat, two-step	309
KHT-30	Duct hygrostat, two-step	323
AHT-30	Outside hygrostat, two-step	315

Control switches

KW/KW-SD	Condensation control switch	327/326
TW	Dew point control switch	331
LS	Leakage sensor	333

SENSORS PRESSURE CONTROLLERS / SWITCHES

for gaseous media

PREMASGARD® **711x** Pressure transducer (mbar/Pa)		353
PREMASGARD® **111x /112x /112x-SD** Pressure transducer (mbar/Pa)		348/349
PREMASGARD® **211x /212x /212x-SD** Pressure transducer (mbar/Pa)		343/342
PREMASREG® **711x** Pressure transducer/ switch (mbar/Pa)		357
ALD Measuring transducer atmospheric pressure (mbar)		363
DS 1 / DS 2 Differential pressure switch (mbar/Pa)		367

For volume flow

PREMASREG® **716x** Volume flow measuring transducer/switch (mbar/Pa)		361

for liquid media

SHD /SHD-SD	Pressure transducer (bar)	368/369
SHD 400	Differential pressure transmitter (bar)	371
SHD 692	Differential pressure transmitter (bar)	373

LIGHT INTENSITY SENSORS MOTION DETECTORS / PRESENCE DETECTORS

Light intensity sensors

AHKF	Outdoor light intensity sensor	381
RHKF	Room light intensity sensor	380
DHKF	In-ceiling light intensity sensor	383

Motion detectors

ABWF	Outdoor motion detector	385
RBWF	Room motion detector	384
DBWF/DBWF-C	In-ceiling motion detector	387

Light intensity and motion detectors

ABWF/LF	Outdoor motion detector and light sensor	391
RBWF/LF	Room motion sensor and light sensor	389
DBWF/LF/FTF	In-ceiling motion detector, light sensor, temperature sensor and humidity sensor	393

AIR QUALITY SENSORS FLOW SENSORS / CONTROLLERS

VOC sensor — * with changeover contact

RLQ-SD	Room air quality sensor	403
RLQ-W	Room air quality sensor	* 403
KLQ-SD	Duct air quality sensor	425
KLQ-W	Duct air quality sensor	* 425

CO_2 sensors

FSCO$_2$	Room CO_2 sensor, in-wall	413
FSTM-CO$_2$	Room temperature and CO_2 sensor, in-wall	413
RCO$_2$-SD	Room CO_2 sensor	407
RCO$_2$-W	Room CO_2 sensor	* 407
RTM-CO$_2$-SD	Room temperature and CO_2 sensor	411
RFTM-CO$_2$-W	Room humidity, temperature and CO_2 sensor	* 411
ACO$_2$-SD	On-wall CO_2 sensor	415
ACO$_2$-W	On-wall CO_2 sensor	* 415
ATM-CO$_2$-SD	On-wall temperature and CO_2 sensor	421
AFTM-CO$_2$-W	On-wall humidity, temperature and CO_2 sensor	* 421
KCO$_2$-SD	Duct CO_2 sensor	429
KCO$_2$-W	Duct CO_2 sensor	* 429
KTM-CO$_2$-SD	Duct temperature and CO_2 sensor	435
KFTM-CO$_2$-W	Duct humidity, temperature and CO_2 sensor	* 435

VOC / and CO_2 sensors

RLQ-CO$_2$-W	Room air quality and CO_2 sensor	* 411
RFTM-LQ-CO$_2$-W	Room humidity, temperature, air quality and CO_2 sensor	* 411
ALQ-CO$_2$-W	On-wall air quality and CO_2 sensor	* 421
AFTM-LQ-CO$_2$-W	On-wall humidity, temperature, air quality and CO_2 sensor	* 421
KLQ-CO$_2$-W	Duct air quality and CO_2 sensor	* 435
KFTM-LQ-CO$_2$-W	Duct humidity, temperature, air quality and CO_2 sensor	* 435

Airflow monitors

KLGF / KLSW	Duct airflow monitor	437
SW	Flow monitor	441
WFS	Wind vane switch	439

RADIO SENSORS RADIO TRANSMITTERS / RADIO SIGNAL RECEIVERS

KYMASGARD® **9000**
EnOcean radio transmitter / radio receiver

BC-9000	Operating controller	447
RFTM-FSE	Room humidity and temperature radio sensor	449
RFTM-FSE-ST	Room control unit / room humidity and temperature radio sensor	449
RFTM-LQ-FSE	Room humidity, temperature and air quality sensor	449
RFTM-BW-FSE	Room humidity, temperature sensor and motion detector	449

EnOcean radio transmitters

RTF2-FSE	Room temperature radio sensor	450
RFTF2-FSE	Room humidity and temperature radio sensor	450
RTF2-FSE-P	Room temperature radio sensor	451
RFTF2-FSE-P	Room humidity and temperature radio sensor	451
RTF2-FSE-PT	Room temperature radio sensor	452
RFTF2-FSE-PT	Room humidity and temperature radio sensor	452
RTF2-FSE-PD	Room temperature radio sensor	453
RFTF2-FSE-PD	Room humidity and temperature radio sensor	453
RTF2-FSE-PDT	Room temperature radio sensor	454
WT-FSE	Wall pushbutton	455
FK1-FSE	Door/window contact	457
HT4-FSE	Hand-held remote control unit	456
IN400-FSE-UP	Pushbutton interface, in-wall	466
AFTF-HK-FSE	Outside radio sensor for humidity, temperature and light intensity	470
AWFS-HK-FSE	Outside radio sensor for wind strength and light intensity	471

EnOcean radio signal receivers

DA100-FEM-UP	Dimmer actuator, in-wall	460
JA100-FEM-UP	Venetian blind actuator, in-wall	461
SA100-FEM-UP	Switching actuator, in-wall	462
SA200-FEM-UP	Switching actuator, in-wall	463
TA100-FEM-UP	Thermostat actuator, in-wall	464
TA200-FEM-UP	Thermostat actuator, in-wall	465
JA200-FEM-AP	Venetian blind actuator, on-wall	467
SA400-FEM-AP	Switching actuator, on-wall	468
SV600-FEM-AP	Dimmer actuator, on-wall	469
USB-FEM	USB communication stick	458

EnOcean Gateway

GW-RS485-FEM	Gateway for RS485-Bus	459

IMMERSION SLEEVES ACCESSORIES / SPARE PARTS

Immersion sleeves

TH 08	Immersion sleeves for temperature sensor	474
TH	Immersion sleeves for temperature sensors	476
THR	Immersion sleeves for temperature sensors	478
THE	Immersion sleeves for sleeve sensor	480

Mounting accessories

MFT-20-K	Mounting flanges, plastic	482
MF-xx-K	Mounting flanges, plastic	482
MF-xx-M	Mounting flanges, metal	483
KRD-04	Capillary tube gland bracket, plastic	483
MK-xx	Mounting brackets	485
ESSH	Welding protection sleeve	485
TH-Adapter-HW	Immersion sleeve adapter (Honeywell / CentraLine)	483

Accessories for Modbus sensors

Modbus-Y	Y-adapter for cable gland	484

Accessories for differential pressure switch

ASD-06	Connection set	484
ASD-07	Connection nipple (90°)	484
ASS-UV	Connection hose, UV-resistant	484
DAL	Pressure outlet	484
DS-MW	Mounting bracket, sheet steel	484

Special accessories and spare parts

WS-01	Sun and ball-impact protection hood	486
WS-03	Weather and sun protection hood (Tyr 2)	486
WS-04	Weather and sun protection hood (Tyr 1)	486
PSW-09	Stainless steel paddle (SW)	486
PWFS-08	Stainless steel vane (WFS)	486
WLP-1	Heat-conductive paste, silicone-free	486

TYPE			PAGE
A			
AAVTF	Outdoor humidity sensor		279
ABWF	Outdoor motion detector		385
ABWF/LF	Outdoor motion detector and light sensor		391
ACO_2-Modbus	On-wall CO_2 sensor		093
ACO_2-SD	On-wall CO_2 sensor		415
ACO_2-W	On-wall CO_2 sensor		415
AFF	Outdoor humidity sensor		274
AFF-20	Outdoor humidity sensor		275
AFF-25	Outdoor humidity sensor		275
AFF-SD	Outdoor humidity sensor		269
AFTF	Outdoor humidity and temperature sensor		274
AFTF-20	Outdoor humidity and temperature sensor		275
AFTF-25	Outdoor humidity and temperature sensor		275
AFTF-HK-FSE	Outside radio sensor for humidity, temperature and light intensity	NEW	470
AFTF-Modbus-T3	Humidity and temperature sensor	NEW	067
AFTF-SD	Outdoor humidity and temperature sensor		269
AFTM-CO_2-Modbus	On-wall humidity, temperature CO_2 sensor		093
AFTM-CO_2-W	On-wall humidity, temperature and CO_2 sensor		421
AFTM-LQ-CO_2-Modbus	On-wall humidity, temperature air quality and CO_2 sensor		093
AFTM-LQ-CO_2-W	On-wall humidity, temperature, air quality and CO_2 sensor		421
AHKF	Outdoor light intensity sensor		381
AH-40	Outdoor hygrostat, one-step		311
AHT-30	Outside hygrostat, two-step		315
ALD	Measuring transducer atmospheric pressure		363
ALQ-CO_2-Modbus	On-wall air quality and CO_2 sensor		093
ALQ-CO_2-W	On-wall air quality and CO_2 sensor		421
ALTF 1	Surface-contact temperature sensor		164
ALTF 02	Surface-contact temperature sensor		166
ALTF 2	Surface-contact temperature sensor		167
ALTM 1	Surface-contact temperature measuring transducer		201
ALTM 1-Modbus-T3	Surface-contact temperature measuring transducer	NEW	055
ALTM 2	Surface-contact temperature measuring transducer		203
ALTM 2-Modbus-T3	Surface-contact temperature measuring transducer	NEW	057
ALTR 060	Surface-contact thermostats		237
ALTR 090	Surface-contact thermostats		236
ALTR 1	Surface-contact thermostats		237
ALTR 3	Surface-contact thermostats		237
ALTR 5	Surface-contact thermostats		237
ALTR 7	Surface-contact thermostats		237
ASTF	On-wall radiation temperature sensor		170
ATF 01	Outside temperature sensor		122
ATF 1	Outside temperature sensor		123
ATF 2	Outside temperature sensor		125
ATM 2	Outside temperature measuring transducer		179
ATM 2-Modbus-T3	Outside temperature measuring transducer	NEW	045
ATM-CO_2-SD	On-wall temperature and CO_2 sensor		421
AWFS-HK-FSE	Outside radio sensor for wind strength and light intensity	NEW	471
B			
BC-9000	Operating controller	NEW	447
D			
DA 100-FEM-UP	Dimmer actuator, in-wall	NEW	460
DBWF	In-ceiling motion detector		387
DBWF-C	In-ceiling motion detector		387
DBWF/LF/FTF	In-ceiling motion detector, light sensor, temperature sensor and humidity sensor		393
DFF	In-ceiling humidity sensor		265
DFTF	In-ceiling humidity and temperature sensor		265
DHKF	In-ceiling light intensity sensor		383
DTF	In-ceiling temperature sensor		121
DS 1	Differential pressure switch		367
DS 2	Differential pressure switch		367
E			
ETF 6	Screw-in sensor		150
ETF 7	Screw-in sensor		141
ETR	Equipment temperature controller		227
F			
FK 1-FSE	Door / window contact		457
FS	2-phase frost protection thermostat		249

TYPE			PAGE
$FSCO_2$	Room CO_2 sensor	NEW	413
FSFM	Room humidity sensor	NEW	261
FSFTM	Room humidity and temperature sensor	NEW	261
FSFTM-CO_2-Modbus	Room humidity, temperature and CO_2 sensor	NEW	089
FSFTM-Modbus	Room humidity and temperature sensor	NEW	065
FST	Frost protection thermostat, mechanical		241
FST-K	Duct frost protection thermostat, mechanical		245
FSTF	Room temperature sensor		112
FSTF-xx	Room control units		116
FSTM	Room temperature sensor	NEW	177
FSTM-CO_2	Room temperature and CO_2 sensor	NEW	413
G			
GW-RS485-FEM	Gateway for RS485-Bus	NEW	459
H			
HFTM	Sleeve sensor with measuring transducer		199
HFTM-Modbus-T3	Sleeve sensor	NEW	053
HSM	Top hat rail measuring transducer		209
HT4-FSE	Hand-held remote control unit		456
HTF-50	Sleeve temperature sensor		158
HTF-200	Screw-in, duct, immersion sensor with cable		160
I			
IN 400-FSE-UP	Pushbutton interface, in-wall	NEW	466
J			
JA 100-FEM-UP	Venetian blind actuator, in-wall	NEW	461
JA 200-FEM-AP	Venetian blind actuator, on-wall	NEW	467
K			
KAVTF	Duct humidity sensor		289
KCO_2-Modbus	Duct CO_2 sensor		097
KCO_2-SD	Duct CO_2 sensor		429
KCO_2-W	Duct CO_2 sensor		429
KFF	Duct humidity sensor		284
KFF-20	Duct humidity sensor		285
KFF-SD	Duct humidity sensor		284
KFTF	Duct humidity sensor		284
KFTF-20	Duct humidity sensor		285
KFTF-Modbus-T3	Duct humidity and temperature sensor	NEW	069
KFTF-SD	Duct humidity sensor		284
KFTM-CO_2-Modbus	Duct humidity, temperature CO_2 sensor		097
KFTM-CO_2-W	Duct humidity, temperature and CO_2 sensor		435
KFTM-LQ-CO_2-Modbus	Duct humidity, temperature air quality and CO_2 sensor		097
KFTM-LQ-CO_2-W	Duct humidity, temperature, air quality and CO_2 sensor		435
KH-10	Duct hygrostat, one-step		317
KH-40	Duct hygrostat, one-step		319
KHT-30	Duct hygrostat, two-step		323
KLGF	Duct airflow monitor		437
KLSW	Duct airflow monitor		437
KLQ-CO_2-Modbus	Duct air quality and CO_2 sensor		097
KLQ-CO_2-W	Duct air quality and CO_2 sensor		435
KLQ-SD	Duct air quality sensor		425
KLQ-W	Duct air quality sensor		425
KTM-CO_2-SD	Duct temperature and CO_2 sensor		435
KTR	Duct temperature controller		233
KW	Condensation control switch		327
KW-SD	Condensation control switch		326
L			
LS-2	Leakage sensor		333
LS-4	Leakage sensor		333
M			
MWTF	Mean value temperature sensor		139
MWTM	Mean value temperature measuring transducer		189
MWTM-Modbus-T3	Mean value temperature sensor	NEW	051
O			
OFTF	Surface temperature sensor		163
P			
PREMASGARD® 111x	Pressure transducer		349
PREMASGARD® 112x	Pressure transducer		349
PREMASGARD® 112x-SD	Pressure transducer		348
PREMASGARD® 211x	Pressure transducer	NEW	343
PREMASGARD® 212x	Pressure transducer	NEW	343
PREMASGARD® 212x-SD	Pressure transducer	NEW	342

TYPE		PAGE
PREMASGARD® 232x-Modbus-T3	Pressure transducer NEW	081
PREMASGARD® 711x	Pressure transducer	353
PREMASREG® 711x	Pressure transducer / switch	357
PREMASREG® 716x	Volume flow measuring transducer / switch	361
PREMASGARD® 814x-Modbus	Duct humidity and temperature sensor with pressure transducer NEW	085
R		
RBWF	Room motion detector	384
RBWF/LF	Room motion sensor and light sensor	389
RCO$_2$-Modbus	Room CO_2 sensor	087
RCO$_2$-SD	Room CO_2 sensor	407
RCO$_2$-W	Room CO_2 sensor	407
RFF	Room humidity sensor	259
RFTF	Room humidity sensor	259
RFTF-Modbus	Room humidity and temperature sensor	063
RFTF-Modbus-xx	Room control units	041
RFTF2-FSE	Room humidity and temperature radio sensor	450
RFTF2-FSE-P	Room humidity and temperature radio sensor	451
RFTF2-FSE-PD	Room humidity and temperature radio sensor	453
RFTF2-FSE-PT	Room humidity and temperature radio sensor	452
RFTM-BW-FSE	Room humidity, temperature sensor and motion detector NEW	449
RFTM-CO$_2$-Modbus	Room humidity, temperature CO_2 sensor	087
RFTM-CO$_2$-W	Room humidity, temperature and CO_2 sensor	411
RFTM-FSE	Room humidity and temperature radio sensor NEW	449
RFTM-FSE-ST	Room control unit / room humidity and temperature radio sensor NEW	449
RFTM-LQ-CO$_2$-Modbus	Room humidity, temperature, air quality and CO_2 sensor	087
RFTM-LQ-CO$_2$-W	Room humidity, temperature, air quality and CO_2 sensor	411
RFTM-LQ-FSE	Room humidity, temperature, and air quality radio sensor NEW	449
RGTF1	Smoke gas duct sensor	153
RGTF2	Smoke gas screw-in sensor	155
RGTM1	Smoke gas temperature measuring transducer	195
RGTM2	Smoke gas temperature measuring transducer	197
RH-2	Room hygrostat, one-step	305
RHKF	Room light intensity sensor	380
RHT	Room hygrostat	304
RHT-30	Room air quality and CO_2 sensor	309
RLQ-CO$_2$-Modbus	Room air quality and CO_2 sensor	087
RLQ-CO$_2$-W	Room air quality and CO_2 sensor	411
RLQ-SD	Room air quality sensor	403
RLQ-W	Room air quality sensor	403
RPFF	Pendulum room humidity sensor	295
RPFF-25	Pendulum room humidity sensor	299
RPFF-SD	Pendulum room humidity sensor	291
RPFTF	Pendulum room humidity sensor	295
RPFTF-25	Pendulum room humidity sensor	299
RPFTF-Modbus-T3	Pendulum room humidity and temperature sensor NEW	071
RPTF1	Pendulum room humidity sensor	168
RPTF2	Pendulum room humidity sensor	169
RPTM1	Pendulum room temperature measuring transducer	205
RPTM1-Modbus-T3	Pendulum room temperature sensor NEW	059
RPTM2	Pendulum room temperature measuring transducer	207
RPTM2-Modbus-T3	Pendulum room temperature sensor NEW	061
RSTF	Room radiation temperature sensor	171
RTF	Room temperature sensor	102
RTF-xx	Room control units	107
RTF2-FSE	Room temperature radio sensor	450
RTF2-FSE-P	Room temperature radio sensor	451
RTF2-FSE-PD	Room temperature radio sensor	453
RTF2-FSE-PDT	Room temperature radio sensor	454
RTF2-FSE-PT	Room temperature radio sensor	452
RTM1	Room temperature measuring transducer	175
RTM1-Modbus	Room control units	043
RTM-CO$_2$-SD	Room temperature and CO_2 sensor	411
RTR-B	Room temperature controller	213
RTR-S	Room temperature controller, fan coil controller	215
RTR-E-UP	Room temperature controller, clock thermostat	219
RYMASKON® 200	Room control units for room automation	039
RYMASKON® 400	Room control units for room automation	037

TYPE		PAGE
S		
SA100-FEM-UP	Switching actuator, in-wall NEW	462
SA200-FEM-UP	Switching actuator, in-wall NEW	463
SA400-FEM-AP	Switching actuator, on-wall NEW	468
SHD	Pressure transducer	369
SHD-SD	Pressure transducer	368
SHD400	Differential pressure transmitter	371
SHD692	Differential pressure transmitter	373
SV600-FEM-AP	Dimmer actuator, on-wall NEW	469
SW	Flow monitor	441
T		
TA100-FEM-UP	Thermostat actuator, in-wall NEW	464
TA200-FEM-UP	Thermostat actuator, in-wall NEW	465
TET	Top hat rail measuring transducer	251
TF43	Immersion, duct, screw-in sensor	130
TF43-F	Immersion, duct, screw-in sensor with cable	135
TF54	Immersion, duct, screw-in sensor	144
TF65	Immersion, duct, screw-in sensor	128
TF65-F	Immersion, duct, screw-in sensor with cable	135
TM54	Immersion/duct temperature measuring transducer	191
TM43	Immersion/duct temperature measuring transducer	183
TM65	Immersion/duct temperature measuring transducer	183
TM65-Modbus-T3	Immersion, duct, screw-in sensor NEW	047
TR22	Temperature controller	221
TR040	Temperature controller	220
TR04040	Temperature controller, two-step	222
TR060	Temperature controller	220
TRxx-F	Temperature controller with remote sensor	223
TW	Dew point control switch	331
TW-Modbus-T3	Dew point control switch NEW	077
U		
USB-FEM	USB communication stick	458
V		
VFF	Showcase humidity sensor	303
VFTF	Showcase humidity and temperature sensor	303
VFTF-Modbus-T3	Showcase humidity and temperature sensor NEW	073
W		
WFS	Wind vane switch	439
WT-FSE	Wall pushbutton	455
Accessories		
ASD-06	Connection set	484
ASD-07	Connection nipple (90°)	484
ASS-UV	Connection hose, UV resistant	484
DAL	Pressure outlet NEW	484
DS-MW	Mounting bracket, sheet steel	484
ESSH	Welding protection sleeve	485
KRD-04	Capillary tube gland bracket, plastic	483
MF-xx-K	Mounting flanges, plastic	482
MF-xx-M	Mounting flanges, metal	483
MFT-20-K	Mounting flanges, plastic	482
MK-xx	Mounting brackets	485
Modbus-Y	Y-adapter for cable gland	484
TH-Adapter-HW	Immersion sleeve adapter	483
TH08	Immersion sleeves	474
TH	Immersion sleeves	476
THE	Immersion sleeves	480
THR	Immersion sleeves	478
PSW-09	Stainless steel paddle	486
PWFS-08	Stainless steel vane (WFS)	486
WLP-1	Heat-conductive paste, silicone-free	486
WS-01	Sun and ball-impact protection hood	486
WS-03	Weather and sun protection hood	486
WS-04	Weather and sun protection hood	486
BASIC	Preference programme	498-503

TYR3 MODBUS HOUSING

FOR THE 3RD GENERATION OF BUS DEVICES FROM S+S

Multi-functional devices are in greater demand than ever. This is why we have developed a housing with innovative assembly and connection technology custom-tailored to these requirements.

Key features include long, rugged service life, galvanic isolation of Modbus interface (RS 485), easiest commissioning and convenient operation.

> Modular design
> All connections on one side
> No security gaps for malware from external Bluetooth devices

NEW

4 spring supported, captive quick-release screws (quarter turn) for long-term, zero distortion and true IP 65 protection tight fit



Compact dimensions, 108 x 78 x 48 mm (W x H x D), optionally with display, cutout approx. 51 x 29 mm

Integrated slotted holes (no additional mounting plate needed)

Rugged enclosure materials (30% glass bead filled polyamide, clear cover in polycarbonate)

2 separate M16/M20 connections with integrated sealing and strain relief for cable diameters of 5 to 13 mm

MADE IN GERMANY

S+S REGELTECHNIK



DIP switches
for bus addressing and
bus configuration
in de-energised state
(no external app required)

Twin-isolated push-in terminals
for tool-free I/O wiring

Standardized function bracket for
circuit boards and sensors of Modbus
devices across all product ranges

Large space
for connections

Interchangeable inserts for
pressure connection, humidity
sintered filter or external
temperature sensor

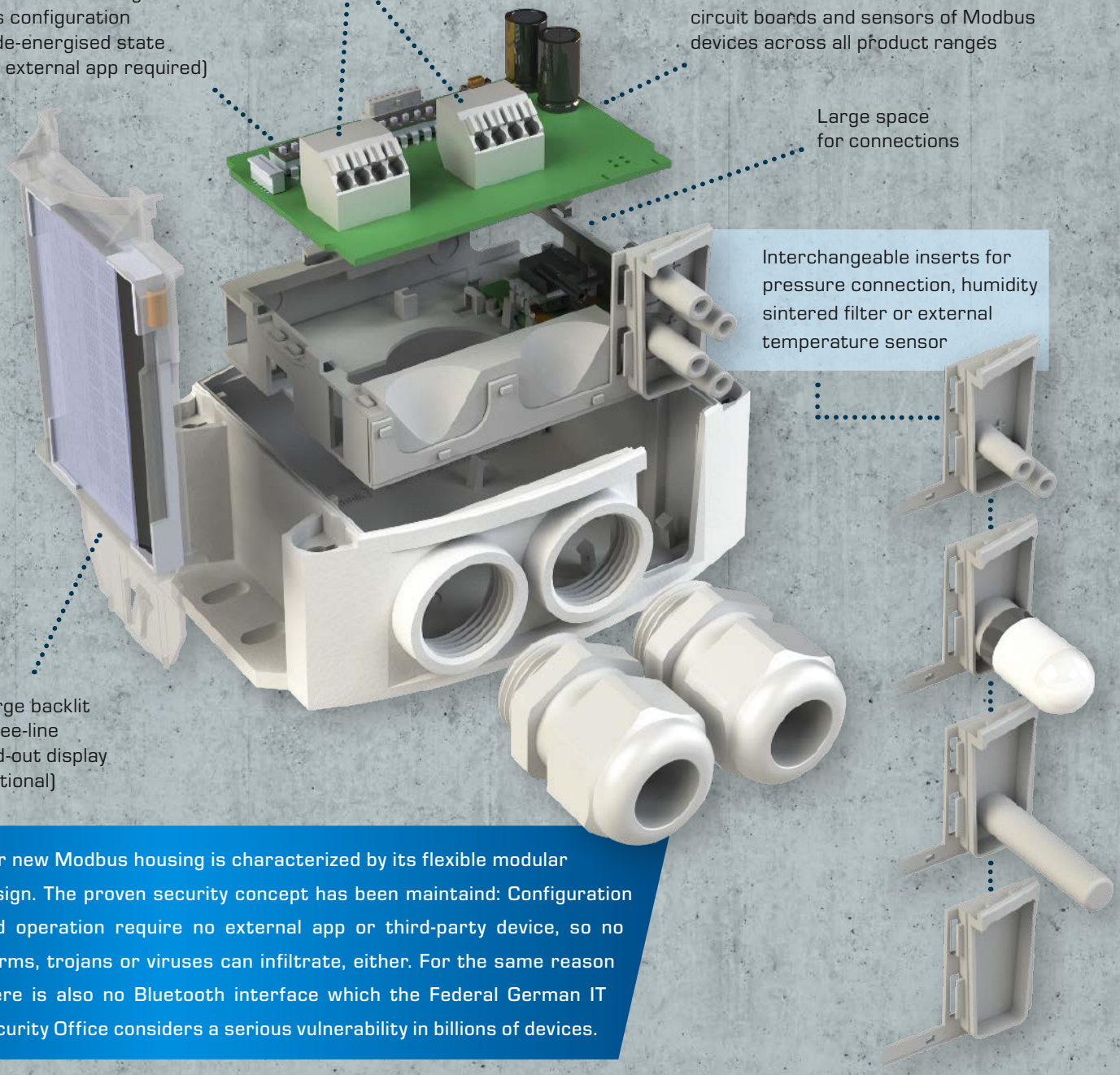

Large backlit
three-line
fold-out display
(optional)

Our new Modbus housing is characterized by its flexible modular design. The proven security concept has been maintaind: Configuration and operation require no external app or third-party device, so no worms, trojans or viruses can infiltrate, either. For the same reason there is also no Bluetooth interface which the Federal German IT Security Office considers a serious vulnerability in billions of devices.

RYMASKON®

MODBUS CAPABLE ROOM CONTROLLERS

As user configurable devices, **RYM**ASKON® room controllers can be integrated in a Modbus network for automated surveillance and control of room climate and lighting. This enables an energy efficient, on-demand room climate control as part of an overall facility management system.

The Modbus control does not restrict the flexible room operation on site. The **RYM**ASKON® **400-Modbus** device can also be used as an autonomous single-room controller.



RYMASKON® 200 - Modbus

- Modbus RTU interface (RS485)
- Integrated temperature and humidity sensors
- 3 digital and 1 universal input
- Programmable LCD multi-function display with RGB backlight in configurable colour (7 basic settings possible), as well as intensity and overall brightness
- 4 to 8 touch function keys
- International icons
- Menu supported configuration
- Buzzer for key tone, fault warning and alarm



Modbus

S+S REGELTECHNIK

LCD multi-function display with dimmable backlight

Touchpad with 6 freely assignable sensor buttons

Rotary encoder with central input key



Glass front panel

Sensor keys for room control with standard icons for temperature, ventilation and/or sun screens and lights; the icons can be custom-configured by means of film templates

IR diode for proximity sensor

RYMASKON® 400 - Modbus

- Modbus RTU interface (RS485)
- Integrated temperature sensor
- 2 digital inputs and 2 digital or analogue outputs
- Suitable also for stand-alone single-room control
- Flat housing with glass front panel in piano-like finish
- Programmable LCD multi-function display with dimmable backlight
- Menu supported configuration by means of recessed rotary encoder with central input key
- 6 user assignable touch function keys
- International icons
- Infrared proximity sensor

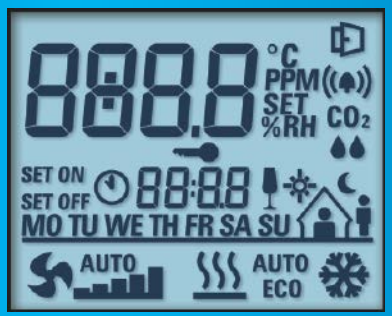

Modbus

GOOD ROOM CLIMATE IS MEASURABLE!

Active and Modbus Capable In-Wall Sensors

With immediate effect, our multi-functional room sensors for temperature, humidity and CO_2 are now also available in the high-quality designs of various panel switch brand manufacturers.

See Products section for details on these new in-wall sensors.

THERMASGARD® **FSTM**
HYGRASGARD® **FSFTM**
AERASGARD® **FSTM-CO_2**
Room sensors

NEW



THERMASGARD® **FSTM-P**
HYGRASGARD® **FSFTM-P**
AERASGARD® **FSFTM-CO_2-Modbus-P**
Room operating devices with potentiometer for set-point adjustment

Modbus

TEMPERATURE ⊕ HUMIDITY ⊕ CO_2 = ALL IN ONE SINGLE DEVICE

PREMASGARD® 211x / 212x / 212x-SD

MULTI-RANGE PRESSURE TRANSDUCERS

We have extended the functionality of our compact pressure, differential pressure and volume flow sensors to include a switchable I/U output. DIP switches enable the selection of parameters, including:

NEW

> Output 0-10 V / 4...20 mA
> Maximum pressure range −5000...+5000 Pa
> Square root output characteristic for volume flow determination

PREMASGARD® **211x**
Pressure connectors on the top side, with / without display



PREMASGARD® **212x**
Pressure connectors on the bottom side, with / without display

PREMASGARD® **212x-SD**

FOR RUGGED OPERATING ENVIRONMENTS

OUR NEW TYR 2E STAINLESS STEEL HOUSING

NEW

For higher demands of durability and hygiene, our proven TYR 2 plastic housing design is now also available in V4A (1.4571) stainless steel for protection class IP 67.

The convenient installation, commissioning and parameterisation features have been maintained.

Various device types on request!

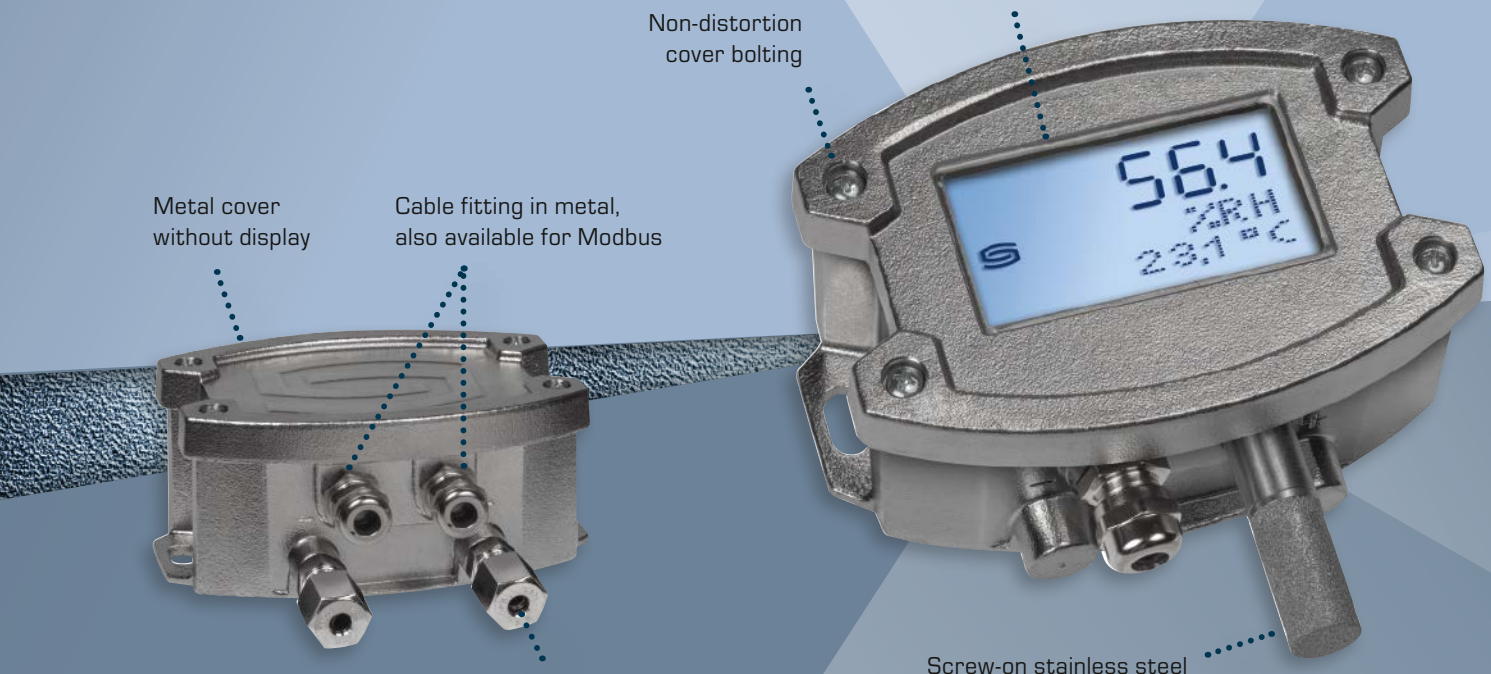

Various temperature, humidity and pressure sensors available in **TYR 2E** stainless steel housing!

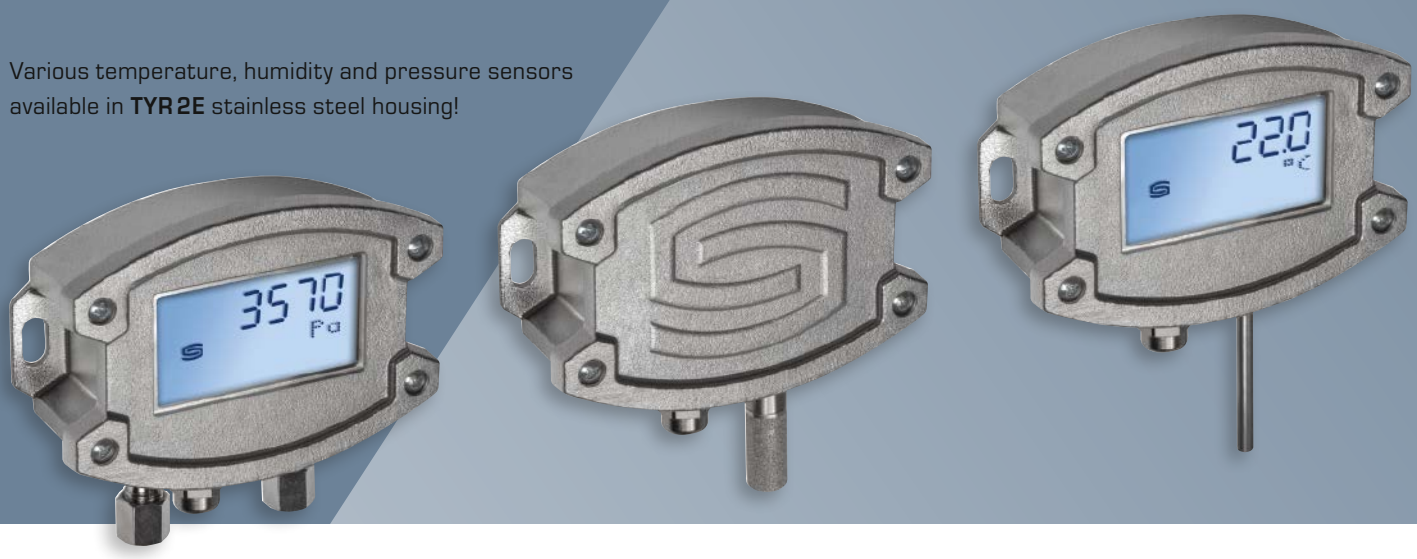

Uncompromising quality on each configuration level

Our portfolio of sensors and transducers is differentiated in three classes depending on the required functionality – without any limitations to their proven S+S quality, reliability and long service life.

S+S STANDARD ***

Tested Safety and Certified Quality

- DIN tested/certified devices
- RoHS conforming materials
- ESD compliant manufacturing
- CE compliance tested by external laboratories

TÜV certified engineering and manufacturing according to EN ISO 9001:2015



Rugged design with snap-on lid

Metal connection pieces

Exchangeable cable connections with integrated strain relief

Complete Programme for Basic Functions

- Compact TYR 01 enclosure in IP 43 protection class
- Up to 2 measuring variables
- Passive outputs, active outputs 0 -10 V, 4 ... 20 mA
- Multi-range switching
- Calibration potentiometers
- Very long product life

MADE IN GERMANY

S+S REGELTECHNIK

S+S PREMIUM ****



Medium Configuration Level for Enhanced Functionality

> Compact TYR 1 enclosure in IP 65 protection class

> Captive quick-release screws (quarter turn) for zero distortion tight fit

> Modbus capable versions

> As needed with three-line display (36 x 15 mm) on fold-out film hinge support

S+S DELUXE *****



Maximum Configuration Level for Highest Demands

> TYR 2 enclosure (126 x 90 x 50 mm) in IP 65 protection class

> Multi-functional devices for up to 5 measuring variables

> Modbus capable versions, analogue and digital outputs, change-over contacts

> As needed with three-line display (70 x 40 mm) on fold-out film hinge support

MADE IN GERMANY

Added Value with System

S+S defines itself as a flexible and innovative partner for your requirements in measurement and control technology. From the patented enclosure design to open system or customer-specific solutions – we provide the highest level of added value and security of investment.

High-performance measurement and control technology helps to save energy and meet strict regulations, such as the German energy efficiency certificate for buildings. To these ends, the bus capability of devices has moved to the fore. We are determined to further strengthen our role as pioneers in this market segment.

OPEN FOR NETWORKED FACILITY AUTOMATION

Sensors and control devices from S+S have an ideal fit in a wide range of open system solutions for facility engineering – from horizontal networks at field level comprising various different participants to the vertical interconnection with higher-level automation and management systems.

Whether Modbus or EnOcean: Our technology is open for all current bus systems used in the industry to collect and provide the required facility data for tasks such as cost control, balancing, and central monitoring.

This helps to secure your investment and facilitates the continuous migration to an integrated architecture of state-of-the-art facility automation.

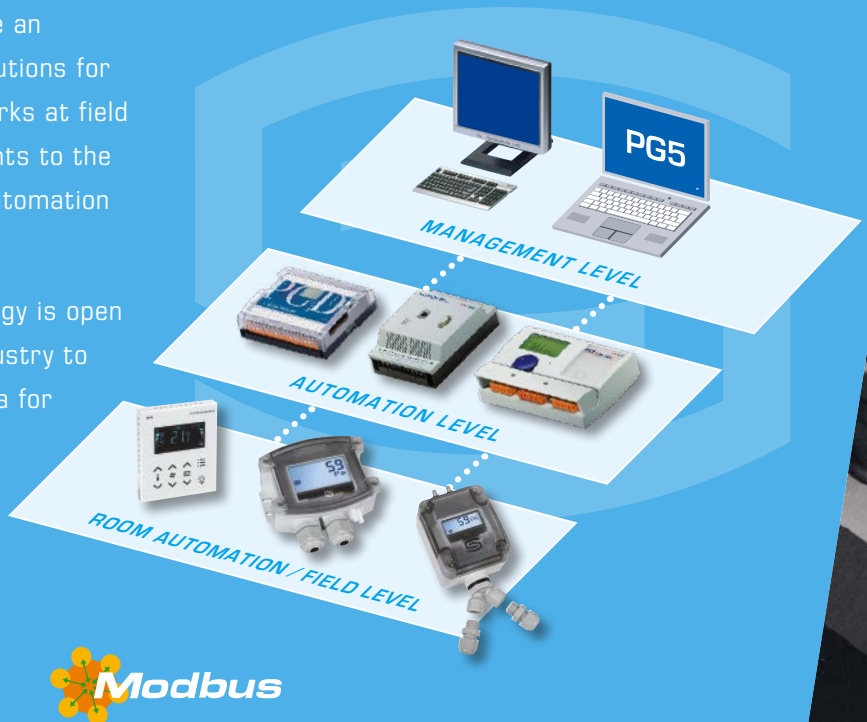

S+S REGELTECHNIK

INDUSTRY FOCUSED SOLUTIONS

Based on our comprehensive experience gained from a wide range of public and institutional projects, we develop complete system solutions for industry-specific facility engineering in banks, airports, hospitals, museums, schools, and sports arenas, to name just a few examples.

As pioneers in this industry, we keep an ear to the market and are firmly committed to the continuous innovation of our product offering – always with an eye on the sustainability and total cost of ownership of our devices.

And true to our promise of providing precision you can feel, made in Germany to the highest standards of quality, at best terms and conditions, including 24-hours shipment of catalogue items on stock.





CUSTOM MANUFACTURING

In addition to our comprehensive range of STANDARD, PREMIUM and DELUXE devices available from stock, we also deliver sensors and controllers manufactured to your specifications.

For instance in compliance with MIL, or with fully metal enclosures for applications according to FDA.

At S+S, devices in smaller volumes down even to singular items are produced with the same precision as larger series.

MADE IN GERMANY

People and Quality

Technology is our business, but above all it is our qualified and motivated employees who make the difference. Each day, they drive the success of S+S Regeltechnik, which we measure by the satisfaction of our customers.

S+S is determined to adhere to its “Made in Germany” principle. We will even go one step further: If it says S+S on the outside, then there’s 100 percent S+S technology inside. The quality and reliability of our products speak for themselves. That’s what our customers value.



> 65 employees

> 500 m² of office / administration space

> 4000 m² of manufacturing space

> 800 m² finished parts warehouse

> 24-hours shipment service

> made-to-order production





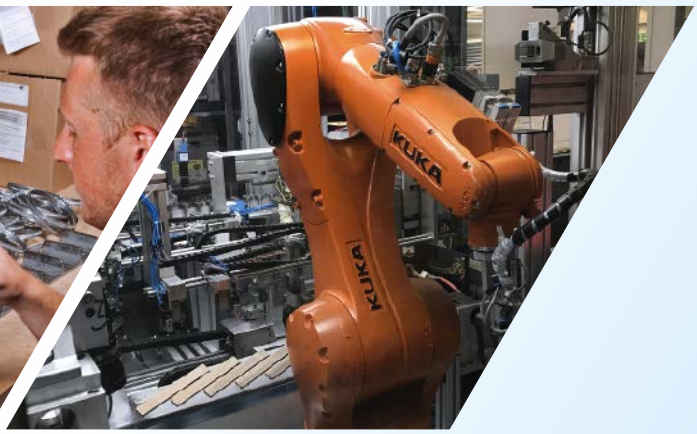



In our climate chambers, we test all S+S measuring and control devices under the toughest conditions for function, ruggedness and reliability.



Everything from a Single Source

S+S stands for a fully integral value chain. All products are designed, developed, manufactured and programmed in-house. In our test center, which includes climate chambers and calibration equipment for all variables, our systems are tested under the toughest conditions for function, ruggedness and longevity.

S+S REGELTECHNIK

Design



Construction



Toolmaking



Hard- & Software

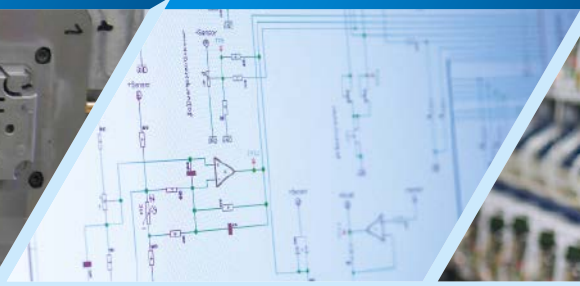

Test Equipment



Production



Testing



Shipping



Five Benefits for Satisfied Customers

At S+S we are naturally proud of the outstanding performance of our products. However, we are not really satisfied before you too are fully convinced of our sensor technology and controllers.

For this reason, we will not rest on our laurels, but keep working hard on further innovating our portfolio. This performance claim is backed by five core principles:

+5

S+S **INNOVATION**

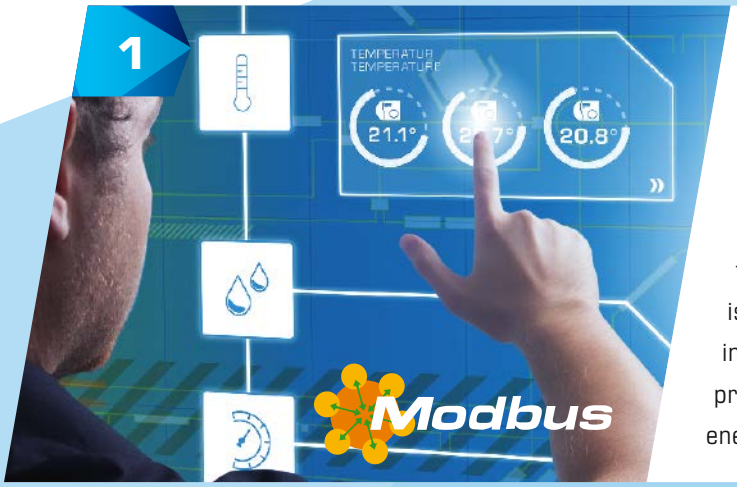

We think ahead and transform the art of the possible into reality. We listen to the market and maintain a focus on practical application at all times. For advanced building sensor technology with a high degree of usability. Our Modbus capable devices, for instance, are characterized by their galvanic isolation from the bus cable, which helps to minimize interferences. Moreover, they can be conveniently programmed and addressed even when not energized.

S+S **EXPERTISE**

PATENTED



Years of experience and creativity are the cornerstones of our business. With qualified technical expertise and openness to new solutions, we develop the sensor and controller technology of tomorrow – today.

S+S owns more than 35 patents, utility models and registered designs, which helps to maximize your security of investment.

S+S **QUALITY**



We measure ourselves against the highest standards – and continuously set new benchmarks ourselves. Our integral quality management system is certified to DIN EN ISO 9001:2015. We comply with the European and German regulations on the restricted use of hazardous substances in electrical and electronic equipment.

In our own climate chambers, our products are tested under the toughest conditions for functionality, ruggedness and durability.

S+S **PRECISION**

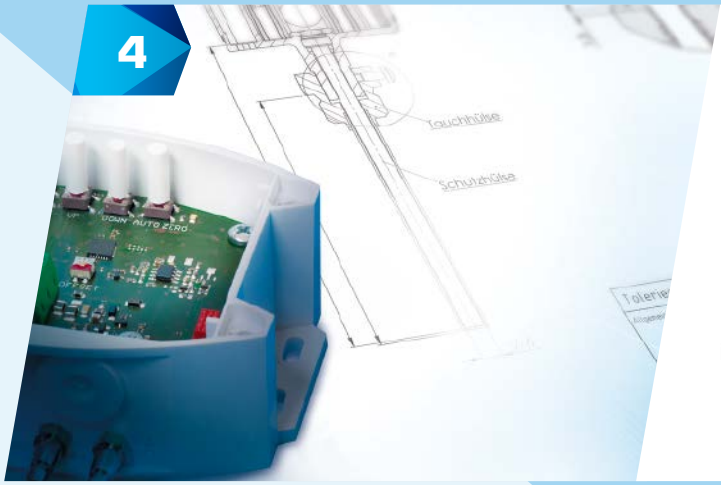

Highest precision is our claim and our promise to you. This is why we develop and manufacture everything at our own facility – from the individual component and design to comprehensive system solutions, using tough and durable materials. Convince yourself, and benefit from the art of German engineering and our vertical manufacturing integration.

S+S **FLEXIBILITY**



In order to maximise your security of supply, all S+S STANDARD, PREMIUM and DELUXE products are shipped from stock within 24 hours.

Our hotline looks forward to your requests for special versions.

S+S REGELTECHNIK

S+S Regeltechnik in the Field

The high quality and reliability of our sensors, transducers and controllers has been proven in many demanding projects in Germany and abroad, from Airbus and the German Parliament to the Observatory in Brussels and the Zoological Collection in Munich.

Our customers value the high performance of our technology for sustainable energy management, efficient facility automation and economic total cost of ownership.



AIRBUS, HAMBURG


GERMANIC NATIONAL MUSEUM, NUREMBERG


GERMAN PARLIAMENT, BERLIN


BMW TOWER AND BMW WORLD, MUNICH

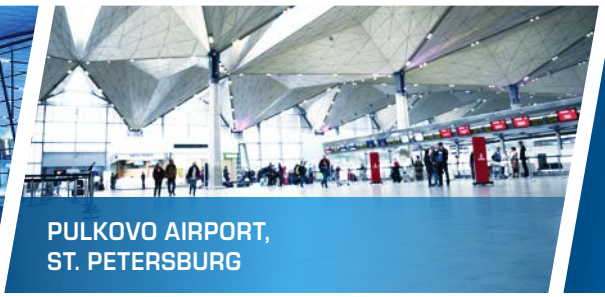
PULKOVO AIRPORT, ST. PETERSBURG

adidas, Herzogenaurach
Airbus, Hamburg
AOL Arena, Dortmund
Audi, Győr, Hungary
Bavarian State Ministry, Munich
Bayreuth Clinic
Berlin Zoo
BMW Tower and BMW World, Munich
Brewery, Mannheim
Charité, Berlin
Daimler-Benz, Sindelfingen
DATEV, Nuremberg
Degussa, Antwerpen
Deutsche Bahn AG, Frankfurt
Erlangen, Tübingen & Stuttgart Universities
Federal German Parliament, Berlin
Federal German Ministry of Agriculture, Berlin
Ford, Saarlouis plant
Fraunhofer Institutes, Freiburg & Dresden
German Embassies Paris & Cairo
German Meteorological Services, Frankfurt
German Opera, Düsseldorf
Germanic National Museum, Nuremberg
Hamburg, Düsseldorf, Stuttgart, Hannover & St. Petersburg Airports
Hannover Stock Exchange
KfW Bank, Frankfurt
Munich & Hamburg University Clinics
National Archive, Merseburg
MAN Nutzfahrzeuge, Munich
Miele, Gütersloh
Museum Island, Berlin
Neue Messe Stuttgart
Opel, Rüsselsheim
Porsche, Weissach, Leipzig, Augsburg
Rheinenergie, Cologne
Rügenwalder Mühle, Bad Zwischenahn
Solothurn Public Hospital, Switzerland
Swarovski, Liechtenstein
U.S. Air Force, Ramstein
Volkswagen, Wolfsburg, Kaluga, Mosel

ELBPHILHARMONIE
HAMBURG

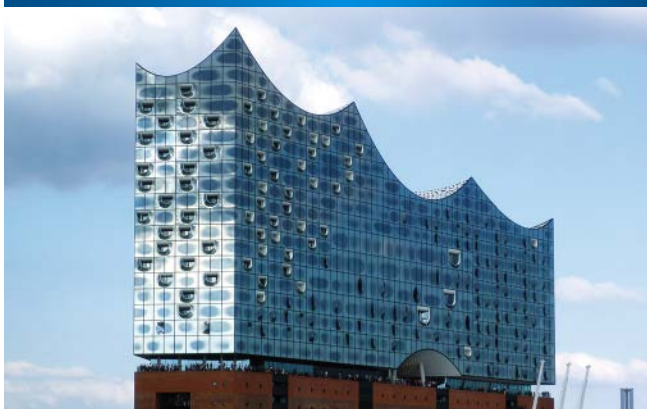

Hamburg's new landmark – come see, listen and be amazed. The “Elbphilharmonie” is a building of superlatives and houses one of the world's best concert halls. This is not only due to its spectular architecture, but also to its unique acoustics.

ADIDAS
HERZOGENAURACH

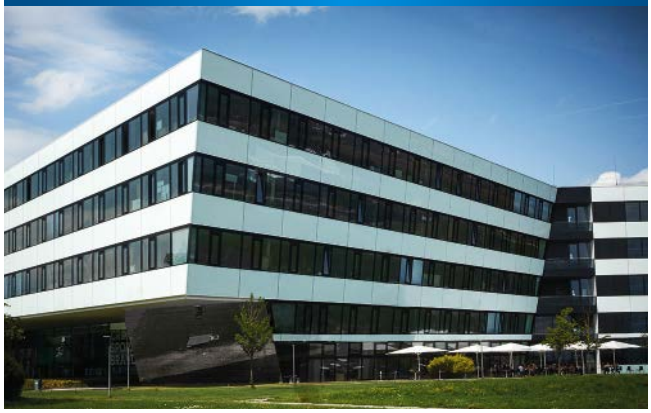

State-of-the-art architecture characterizes the new administration building of Germany's well-know world leader in sports wear. The global player uses some of the most advanced and effective measuring and sensor technology from S+S in its premises.

MUSEUM ISLAND
BERLIN



Berlin's Museum Island is a UNESCO world heritage site. Amongst others, it houses the city's Near East Museum, Byzantine Art Museum and Sculpture Collection.

DATEV
NUREMBERG



DATEV company stands for high-quality software solutions and IT services used by tax consultants, auditors, lawyers and companies.

For further reference projects, please visit our website:

www.SplusS.de

Product Lines



S+S REGELTECHNIK



MODBUS

Bus-capable sensors
with programmable control

Pages 026 – 097

THERMASGARD® & THERMASREG®

Temperature sensor
temperature controllers and thermostats

Pages 098 – 251

HYGRASGARD® & HYGRASREG®

Humidity sensors
humidity controllers and hygrostats

Pages 252 – 333

PREMASGARD® & PREMASREG®

Pressure controllers
pressure regulators and switches

Pages 334– 373

PHOTASGARD® & KINASGARD®

Light intensity sensors
motion detectors and presence detectors

Pages 374 – 393

AERASGARD®, RHEASGARD®& RHEASREG®

Air quality and flow sensors
flow monitors and controllers

Pages 394 – 441

KYMASGARD®

Radio sensors, radio transmitters and
radio signal receivers with EnOcean technology

Pages 442 – 471

Immersion sleeves & Accessories

Basic Programme,
appendix, useful information

Pages 472 – 507



Modbus

As energy costs are soaring, centralized power consumption control is also gaining importance in facility management. The integration of our Modbus-capable temperature, humidity and pressure as well as VOC and CO_2 transducers in a joint network can greatly improve overall energy efficiency and provide substantial savings on running costs.

APPLICATION RANGE

> Industrial and commercial facility automation
> Central energy management in public and private facilities, such as hospitals, administration centers, schools and museums
> Measurement and control of temperature, humidity, pressure and air quality parameters in poorly accessible or remote areas



THERMASGARD®, HYGRASGARD®, PREMASGARD® & AERASGARD®

026 – 097

Room control units, Room sensors

RYMASKON® **200 - Modbus**	Room control unit for room automation, on-wall	039
RYMASKON® **400 - Modbus**	Room control unit for room automation, on-wall	037
RFTF - Modbus - xx	Room control units, on-wall	041
RTM 1 - Modbus	Room sensor, on-wall	043
RFTM - CO_2 - Modbus - P	Room control units, on-wall	087
FSFTM - Modbus **FSFTM - Modbus - P**	Room sensors and Room control units, in-wall	065
FSFTM - CO_2 - Modbus **FSFTM - CO_2 - Modbus - P**	Room sensors and Room control units, in-wall	089

Temperature sensors

RTM 1 - Modbus	Room temperature sensor, on-wall	043
RPTM 1 - Modbus - T3	Pendulum room temperature sensor	059
RPTM 2 - Modbus - T3	Pendulum room temperature sensor	061
HFTM - Modbus - T3	Sleeve sensor	053
ALTM 1 - Modbus - T3	Surface-contact temperature measuring transducer	055
ALTM 2 - Modbus - T3	Surface-contact temperature measuring transducer	057
ATM 2 - Modbus - T3	Outside temperature measuring transducer	045
TM 65 - Modbus - T3	Immersion, duct, screw-in sensor	047
MWTM - Modbus - T3	Mean value temperature sensor	051

Humidity sensors

FSFTM - Modbus	In-wall humidity and temperature sensor	065
RFTF - Modbus	Room humidity and temperature sensor	063
RPFTF - Modbus - T3	Pendulum room humidity and temperature sensor	071
VFTF - Modbus - T3	Showcase humidity and temperature sensor	073
AFTF - Modbus - T3	On-wall humidity and temperature sensor	067
KFTF - Modbus - T3	Duct humidity and temperature sensor	069
TW - Modbus - T3	Dew point sensor	077

Pressure sensors

PREMASGARD® **232x - Modbus - T3**	Pressure transducer	081
PREMASGARD® **814x - Modbus**	Duct humidity and temperature sensor with pressure measuring transducer	085

VOC and CO_2 sensors

FSFTM - CO_2 - Modbus	Multifunctional in-wall sensor*	089
RFTM - LQ - CO_2 - Modbus	Multifunctional room sensor*	087
AFTM - LQ - CO_2 - Modbus	Multifunctional on-wall sensor*	093
KFTM - LQ - CO_2 - Modbus	Multifunctional duct sensor*	097

* for humidity, temperature, air quality and/or CO_2

BUS

Modbus

MADE IN GERMANY

Modbus-Capable Measuring Transducers for multi-functional requirements

Broad Spectrum

All Modbus-compatible S+S temperature, pressure, and humidity sensors are designed to be multifunctional. This reduces the diversity of types and expands their possible applications. Thanks to microprocessor technology, almost any measuring range can be represented, including custom specifications.

Optimum Precision

All devices are developed, manufactured and tested according to the latest criteria. Each sensor is precisely re-adjustable using offset potentiometers.
Take advantage of our experience, our development, manufacturing and product know-how and order these products directly from the manufacturer.

Technical Data

- Galvanic isolation of the RS485 Modbus interface
- Integrated selectable bus termination resistance
- Display with backlighting and freely configurable
- Offset adjustment with potentiometer
- Temperature resolution: 16 bit AD converter, 0.1 K resolution
- Measuring range: –50 to +150 °C
- Accuracy: typically ± 0.2K at + 25 °C
- Power supply: 15...36V DC; 24V AC ± 20 %
- All devices programmable and addressable even when not energized

Certified Quality

Our development and production in Nuremberg/Germany is certified by TÜV Thüringen according to DIN EN ISO 9001:2015.

GOST certificates

EAC certified

Approved Safety

RoHS conforming materials

ESD compliant manufacturing

CE compliance tested by external laboratories

Modbus





1

Illuminated Display

With backlighting as well as freely configurable 7/14 segment and 40-point matrix for display of individual measured values

2

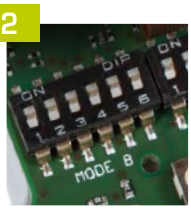

DIP Switches für Busparameter

Easy configuration of bus parameters: baud rate, parity, parity check and bus termination

3

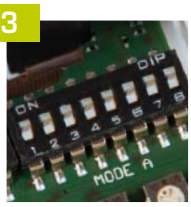

DIP Switches for Bus Address

Up to 247 addresses possible, address can be configured even when the device is not energized

4



Offset Potentiometer

For fine adjustment (zero point offset) and readjustment upon recalibration

5



LED for Telegram Indication

(Green for Receive, Red for Error) Permits fast bus communication diagnosis

6



Bus Terminals

Push-in terminals (2x) for I/O



S+S TECHNOLOGY FOR
SMART BUILDINGS

S+S REGELTECHNIK

Bus address (DIP A) in binary format

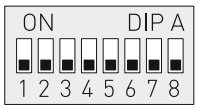

DIP switch [A] for setting the bus address:

Bus address (binary coded, value selectable from 1 to 247)							
DIP 1	**DIP 2**	**DIP 3**	**DIP 4**	**DIP 5**	**DIP 6**	**DIP 7**	**DIP 8**
128	**64**	**32**	**16**	**8**	**4**	**2**	**1**
ON	**ON**	OFF	OFF	OFF	OFF	OFF	**ON**

Example shows
128 + 64 + 1 = 193
as Modbus address.

DIP switch

1		51		101		151		201	
2		52		102		152		202	
3		53		103		153		203	
4		54		104		154		204	
5		55		105		155		205	
6		56		106		156		206	
7		57		107		157		207	
8		58		108		158		208	
9		59		109		159		209	
10		60		110		160		210	
11		61		111		161		211	
12		62		112		162		212	
13		63		113		163		213	
14		64		114		164		214	
15		65		115		165		215	
16		66		116		166		216	
17		67		117		167		217	
18		68		118		168		218	
19		69		119		169		219	
20		70		120		170		220	
21		71		121		171		221	
22		72		122		172		222	
23		73		123		173		223	
24		74		124		174		224	
25		75		125		175		225	
26		76		126		176		226	
27		77		127		177		227	
28		78		128		178		228	
29		79		129		179		229	
30		80		130		180		230	
31		81		131		181		231	
32		82		132		182		232	
33		83		133		183		233	
34		84		134		184		234	
35		85		135		185		235	
36		86		136		186		236	
37		87		137		187		237	
38		88		138		188		238	
39		89		139		189		239	
40		90		140		190		240	
41		91		141		191		241	
42		92		142		192		242	
43		93		143		193		243	
44		94		144		194		244	
45		95		145		195		245	
46		96		146		196		246	
47		97		147		197		247	
48		98		148		198			
49		99		149		199			
50		100		150		200			

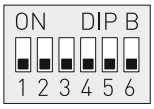

DIP switch [B] for setting bus parameters:

Baud rate (selectable)	DIP 1	DIP 2
9600 baud	**ON**	OFF
19200 baud	**ON**	**ON**
38400 baud	OFF	**ON**
Reserved	OFF	OFF

Parity (selectable)	DIP 3
EVEN (numbered)	**ON**
ODD (numbered)	OFF

Parity check (on/off)	DIP 4
Active (1 stop bit)	**ON**
Inactive (no parity) (2 stop bits)	OFF

8N1 mode (on/off)	DIP 5
Active	**ON**
Inactive (default)	OFF

Bus termination (on/off)	DIP 6
Active	**ON**
Inactive	OFF

Configuration

BUS ADDRESS

The device address in the range of **1 to 247** is set at DIP switch [A].
For switch positions 1 to 8 see the table on the back!

Address 0 is reserved for broadcast messages. Addresses greater than 247 must not be assigned and are ignored by the device.
The DIP switches are binary-coded with the following values:

DIP 1 = **128** ..... DIP 1 = **ON**
DIP 2 = **64** ..... DIP 2 = **ON**
DIP 3 = 32 ..... DIP 3 = OFF
DIP 4 = 16 ..... DIP 4 = OFF
DIP 5 = 8 ..... DIP 5 = OFF
DIP 6 = 4 ..... DIP 6 = OFF
DIP 7 = 2 ..... DIP 7 = OFF
DIP 8 = **1** ..... DIP 8 = **ON**

The switch positions shown here results in the Modbus address **128 + 64 + 1 = 193**

BUS PARAMETERS

The baud rate (speed of transmission) is set at DIP switches 1 and 2 of DIP switch block [B].
Selectable are **9600 baud, 19200 baud**, or **38400 baud** – see table!

Parity is set at DIP switch 3 of DIP switch block [B].
Selectable are **EVEN** or **ODD** – see table!

Parity check is activated via DIP switch 4 of DIP switch block [B].
Selectable are **active (1 stop bit)**, or **inactive (2 stop bits)**, i.e. no parity check – see table!

The **8N1 mode** is activated via DIP switch 5 of DIP switch block [B].
The functionality of DIP switch 3 (parity) and DIP switch 4 (parity check) of DIP switch block [B] is therefore deactivated.
Selectable are 8N1 **active** or **inactive (default)** – see table!.

Bus termination is activated via DIP switch 6 of DIP switch block [B].
Selectable are **active** (bus termination resistance of 120 Ohm), or **inactive** (no bus termination) – see table!

When bus parameters and bus address are changed at devices with **display**,
the respective settings are shown on the display for approx. 30 seconds.

COMMUNICATION INDICATOR

Communication is indicated via two LEDs.
Error-free received telegrams are signalized by the green LED lighting up, regardless of the device address.
Faulty telegrams or triggered Modbus exception telegrams are depicted by the red LED lighting up.

DIAGNOSTICS

An error diagnostic function is integrated.

S+S REGELTECHNIK

Display individually programmable via Modbus interface

Display (Baldur)
Symbols and display examples

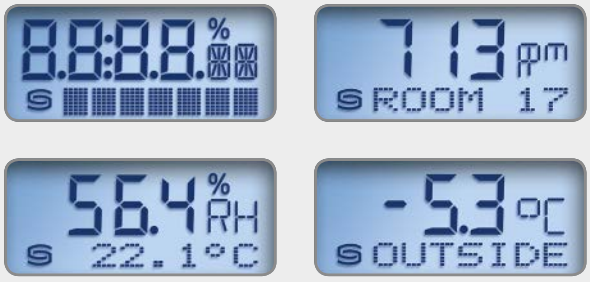

Alternative parameters
Display programmable via index



Display (Tyr 2)
Symbols and display examples



Individually programmable display area for two or three-line displays

Our displays can be controlled via the Modbus interface.
This means that messages such as those from the PLC can also be displayed.

All characters in the display can be individually described both in the 7-segment area, and in the dot matrix area.

Depending on the device type, it is also possible to display alternative parameters such as absolute humidity, dew point, mixture ratio or enthalpy instead of the standard display.

Display (Tyr 3)
Symbols and display examples



Composition of segment patterns

Display (Baldur)
two-line, cut-out approx. 36 x 15 mm

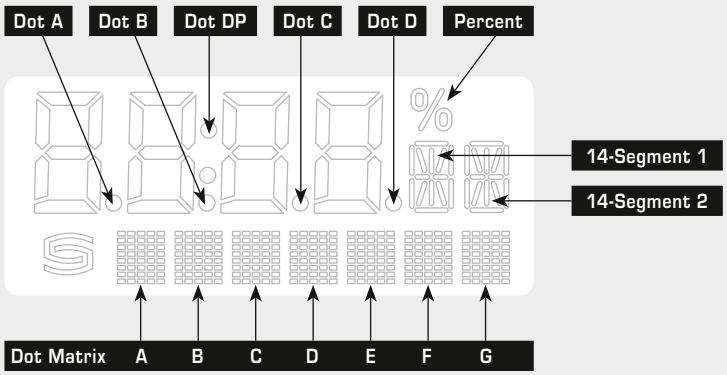

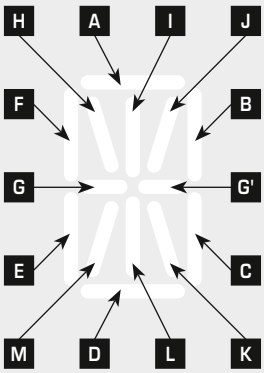

Display (Tyr 2)
three-line, cut-out approx. 70 x 40 mm

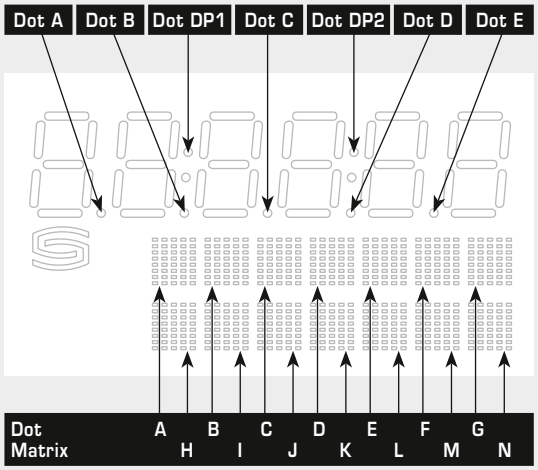

Display (Tyr 3)
three-line, cut-out approx. 51 x 29 mm

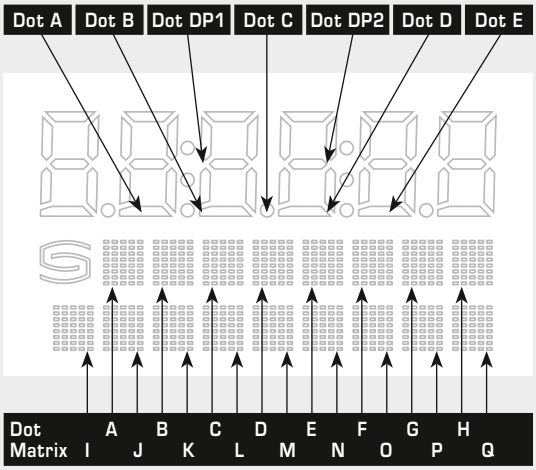

Representable characters in the dot matrix display area for two- and three-line displays

ASCII characters or control characters are displayed as spaces.

ASCII	Sign
32	Blank
33	!
34	“
35	#
36	$
37	%
38	&
40	(
41	)
42	*
43	+
44	,
45	-
46	.
47	/

ASCII	Sign
48	0
49	1
50	2
51	3
52	4
53	5
54	6
55	7
56	8
57	9
58	:
59	;
60	<
61	=
62	>

ASCII	Sign
63	?
64	@
65	A
66	B
67	C
68	D
69	E
70	F
71	G
72	H
73	I
74	J
75	K
76	L
77	M

ASCII	Sign
78	N
79	O
80	P
81	Q
82	R
83	S
84	T
85	U
86	V
87	W
88	X
89	Y
90	Z
91	[
93	]

ASCII	Sign
94	^
95	_
96	\
97	a
98	b
99	c
100	d
101	e
102	f
103	g
104	h
105	i
106	j
107	k
108	l

ASCII	Sign
109	m
110	n
111	o
112	p
113	q
114	r
115	s
116	t
117	u
118	v
119	w
120	x
121	y
122	z
123	{

ASCII	Sign
124	|
125	}
129	ü
132	ä
142	Ä
148	ö
153	Ö
154	Ü
223	°

General layout of bus structure and bus topology with terminating and bias resistors

General layout of bus structure

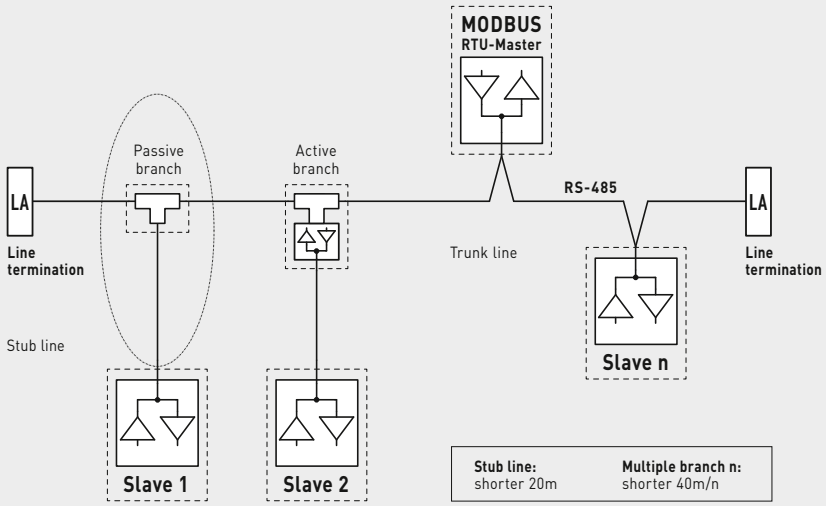

Bus topology with terminating and bias resistors

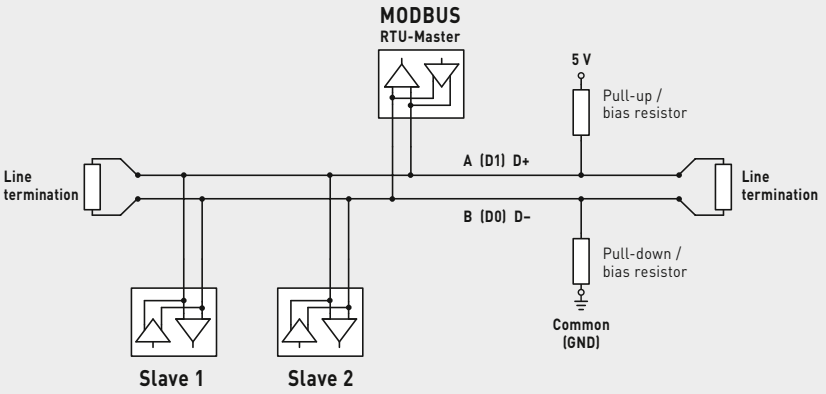

Terminating resistor may only be installed at the ends of the bus line.
In networks with repeaters not more than two line terminations are allowed.
Line termination at the device can be activated via DIP switch 6.
The bias resistors for bus level definition in the resting state are usually activated at the Modbus master / repeater.

The maximum number of subscribers per Modbus segment is 32 devices.
When the number of subscribers is greater, the bus must be subdivided into several segments separated by repeaters. The subscriber address can be set from 1 to 247.

For the bus line, a twisted-pair cable data line / power supply line and copper mesh wire shield must be used. Therefore, the line capacitance should be less than 100 pF/m (e.g. Profibus cable).

Circuit board basic design **Modbus Tyr3**

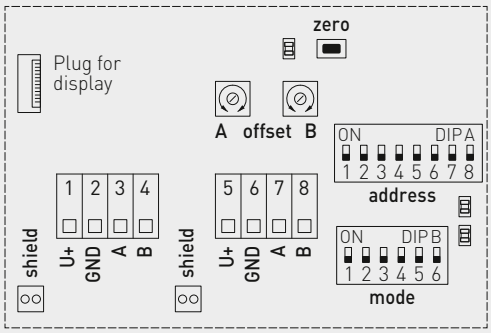

DIP A: Bus address
DIP B: Bus parameters (Baud rate, parity...)
Telegram indicator Reception (LED green) Error (LED red)
LED (internal status)
Reset button
Offset correction
Shielding

TECHNICAL DATA

Power supply:	24 V AC (± 20 %) and 15...36 V DC
Power consumption:	< 2 W / 24 V DC < 3,5 VA / 24 V AC
Electrical connection:	see schematic diagram 0.2 - 1.5 mm², via push-in terminals
Bus parameters:	**can be configured and addressed** via DIP switches **in the absence of current delivery** (under currentless conditions)
Bus interface:	RS 485, **galvanically isolated,** Bus termination activatable via DIP switches. Up to 32 devices possible in one segment. In case of a greater number of devices, RS485 transceivers must be used.
Bus protocol:	Modbus (RTU mode), address range 0...**247** selectable
Baud rate:	9600, 19200, 38400 Baud
Status indicator:	LED green = Telegram valid LED red = Telegram error
Display:	The Modbus interface allows the display to be **individually** configured both in the 7-segment area and in the dot-matrix area.

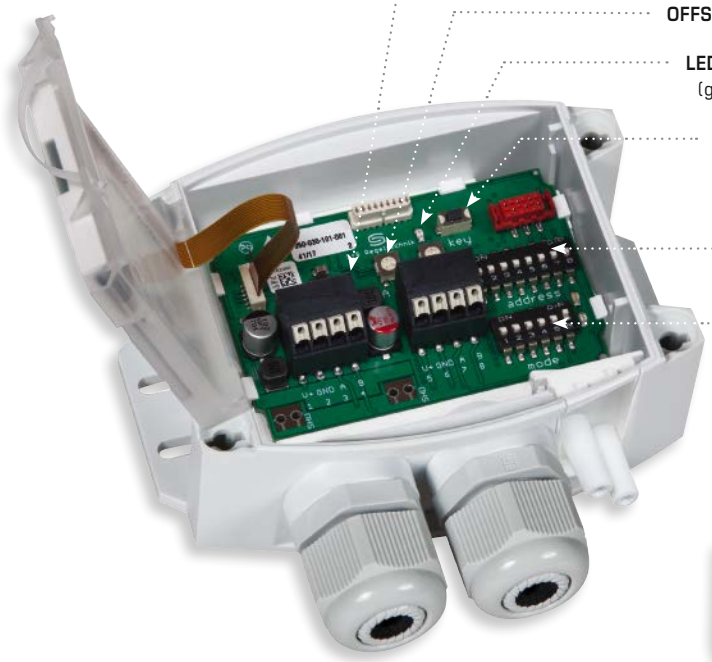

2 separate **plug terminals** (push-in terminals)

OFFSET correction

LED for telegram indication (green for reception , red for error)

Push-button for manual zero point calibration

DIP switches block A for bus address

DIP switches block B for bus parameters



Foldable **display** (optional), Individually programmable display

2 separate **cable glands** with seal and strain relief

RYMASKON® 400 - Modbus

Room control unit for room automation, configurable, with multifunctional display and Modbus connection

S+S REGELTECHNIK

RYMASKON® stands for a series of multifunctional room control units.
The individually configurable **RYM**ASKON® **400 - Modbus** enables automated monitoring and control of the indoor climate and illumination in a Modbus network. It has two digital inputs and two digital/analogue outputs. Room climate control and regulation can be accessed from a central point on a higher-level Modbus master and on-site operation can be selectively or completely disabled. Thanks to its internal outputs, the inputs and settings on the device do not necessarily have to be processed by the master. This means that it is also possible to have decentralised individual room control at any time. An internal sensor detects the room temperature.

Six freely assignable function buttons on the front panel of the unit can be used for on-site operation and configuration. An integrated rotary encoder with a central input button enables manual adjustment of settings and parameter assignment on location. Desired functions (such as "Light ON") and display values can be activated by triggering an approximation sensor when entering the room.

The dimmable multifunctional display is designed specifically for room operation and uses intuitive symbols for a clear view of all available spatial data. Besides the time, weekday and climate parameters (temperature, humidity, dew point, CO_2 content), it can also display additional features, such as heating/cooling and fan modes, window open, lighting, alarm, key lock or room occupancy.

RYMASKON® **412 - Modbus**
RYMASKON® **422 - Modbus**



TECHNICAL DATA

Power supply:	24 V DC (± 10 %)
Power consumption:	1.08 W at 100 % backlighting 0.94 W at 15 % backlighting 0.89 W without backlighting (without load at the actuator outputs)
Inputs:	2 digital inputs without additional 0 V output signal *
Outputs:	RYMASKON 410 : 2 analogue outputs (0-10 V DC) rated current max. 4 mA RYMASKON 420 : 2 digital outputs or PWM rated current 400 mA (short circuit max. 1.2 A)
Interface:	RS485 Modbus RTU Slave (57600, 38400, 19200, 9600 Baud), bus termination can be set via DIP switch
Sensor:	NTC 10 kΩ, 0...+70 °C, precision ±0.4 K
Operating elements:	multifunctional display, 6 touch buttons, 1 rotary encoder, 1 approximation sensor (IR)
Electrical connection:	0.14 - 1.5 mm², via plug-in screw terminals
Enclosure:	plastic, glass front panel, black or white colour
Dimensions:	88 x 173 x 30 mm (incl. connection terminals)
Mounting:	using a plastic mounting plate (see dimensional drawing), wall mounting or on in-wall flush double switch box
Ambient temperature:	+5...+40 °C (operation); –10...+50 °C (storage)
Permitted humidity:	0...85 % r. H. (without dew formation)
Protection type:	IP 20 (according to EN 60 529)
Standards:	CE-conformity, electromagnetic compatibility according to EN 61 326, EMC Directive 2014 / 30 / EU

*** digital inputs (DI1 / DI2)**
In order to connect potential-free contacts, a GND signal (e.g. terminal X2.3) should be routed to the desired input via the contact.

Schematic diagram * **RYM**ASKON® **410 - Modbus**

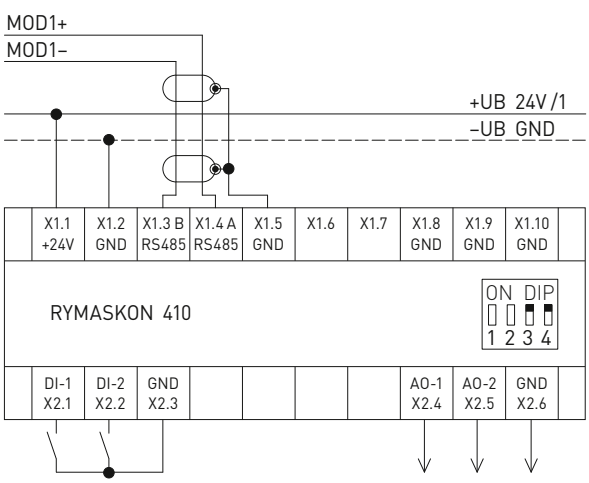

Schematic diagram * **RYM**ASKON® **420 - Modbus**

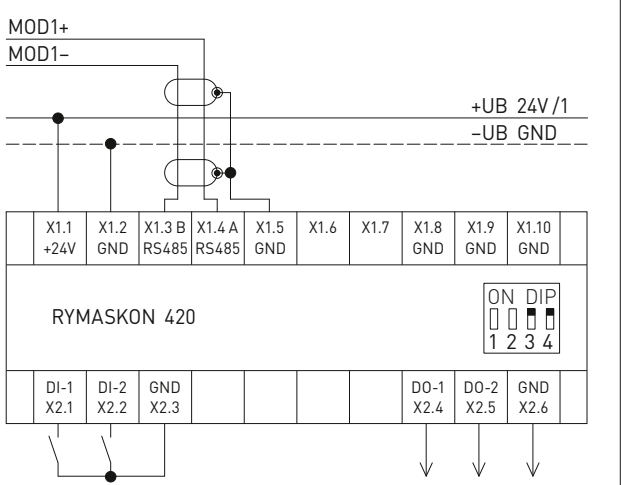

Dimensional drawing — **RYM**ASKON® **400-Modbus**

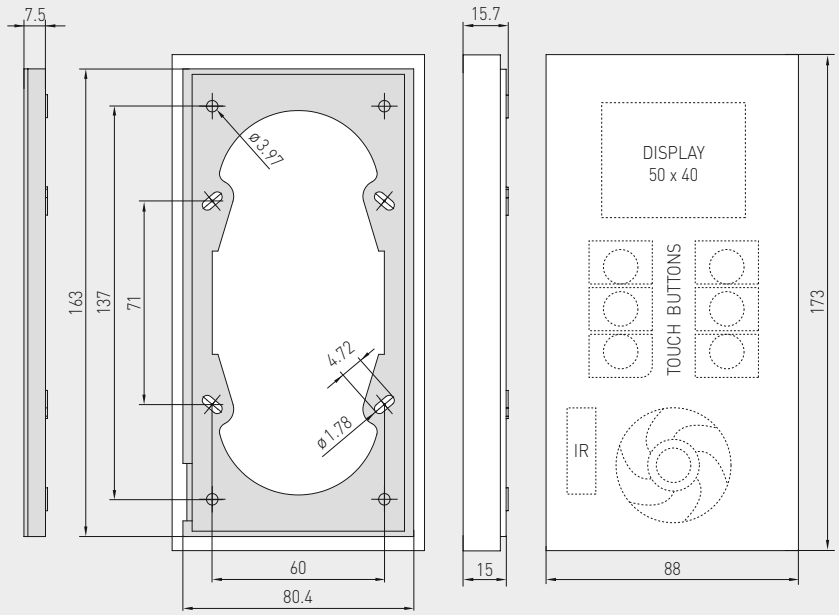

RYMASKON® **411-Modbus**
RYMASKON® **421-Modbus**



Display symbols — **RYM**ASKON® **400-Modbus**



DIP Switch — **RYM**ASKON® **400-Modbus**		
RS 485 bus termination	**DIP 3**	**DIP 4**
activated (default)	**ON**	**ON**
deactivated	OFF	OFF

Note:
Always configure the bus termination of the RS 485 interface (DIP 3 and DIP 4) **in pairs!**

Connecting diagram — **RYM**ASKON® **410-Modbus**

	X2	
Input 1	1	DI-1 (digital) 0 V
Input 2	2	DI-2 (digital) 0 V
	3	GND
Output 1	4	AO-1 (analogue) 0-10 V DC
Output 2	5	AO-2 (analogue) 0-10 V DC
	6	GND
	X1	
	1	+UB 24 V DC
	2	–UB GND
	3	RS485 – B (Modbus RTU)
	4	RS485 – A (Modbus RTU)
	5	GND
	6	
	7	
	8	GND
	9	GND
	10	GND

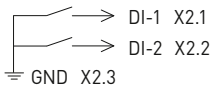

Connecting diagram — **RYM**ASKON® **420-Modbus**

	X2	
Input 1	1	DI-1 (digital) 0 V
Input 2	2	DI-2 (digital) 0 V
	3	GND
Output 1	4	DO-1 (digital / PWM)
Output 2	5	DO-2 (digital / PWM)
	6	GND
	X1	
	1	+UB 24 V DC
	2	–UB GND
	3	RS485 – B (Modbus RTU)
	4	RS485 – A (Modbus RTU)
	5	GND
	6	
	7	
	8	GND
	9	GND
	10	GND

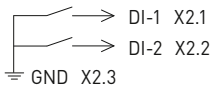

RYMASKON® **400-Modbus** Room control unit for room automation

Type / WG02	Communication	Output	Colour	Display	Item No.
RYMASKON® **410-Modbus**					
RYMASKON 411	RS485	2x (analog) 0-10V	black	■	1901-5121-2101-000
RYMASKON 412	RS485	2x (analog) 0-10V	white	■	1901-5121-2102-000
RYMASKON® **420-Modbus**					
RYMASKON 421	RS485	2x (digital / PWM)	black	■	1901-5121-2201-000
RYMASKON 422	RS485	2x (digital / PWM)	white	■	1901-5121-2202-000
	PWM = pulse-width modulation				
ACCESSORIES					
KA-2	**Modbus communication adapter** with USB/RS485 interface for system connection or/and as an active bus termination resistance				on request

RYMASKON® 200 - Modbus

Room control unit for room automation, configurable, with multifunctional display and Modbus connection

S+S REGELTECHNIK

RYMASKON® stands for a series of multifunctional room control units.
The individually configurable **RYM**ASKON® **200 - Modbus** enables automated monitoring and control of the indoor climate and illumination in a Modbus network. It provides three digital inputs and a universal input, which allows connection of up to four external push buttons or switches. It can be configured remotely from a higher-level Modbus master and integrated into a cross-building room climate monitoring and data acquisition system. Internal sensors record room temperature, relative humidity and dew point.

Up to eight capacitive function buttons on the front panel of the compact unit can be used for on-site operation and configuration. A buzzer sounds to acknowledge button use and can also be used as an acoustic fault or alarm warning.

The dimmable multifunctional display is designed specifically for room operation and uses intuitive symbols for a clear view of all available spatial data. Besides the time, date and climate parameters (temperature, humidity, dew point, CO_2 content), it can also display additional features, such as fan mode or room occupancy. The back light colour can be adapted to the room design.

RYMASKON® **200 - Modbus**
Type 232



TECHNICAL DATA

Power supply:	24 V DC (± 10 %)
Power consumption:	max. 0.8 W
Inputs:	3 digital inputs (for standard push buttons or switches) 1 universal input (can be configured for connecting NTC10K temperature sensors or as additional digital input for the connection of standard push buttons or switches)
Bus interface:	RS485 Modbus RTU slave (57600, 38400, 19200, 9600 Baud), bus termination can be set via DIP switch, configurable speed 1200-115200 bit/s (typically 57600 bit/s), adjustable transfer mode (typically "8E1", 1 start bit, 8 data bits, even parity, 1 stop bit)
Equipment:	1 NFC (Near Field Communication) 1 infra-red receiver (NEC protocol) 1 buzzer
Operating elements:	1 backlit multifunctional display (individually programmable RGB colour selection) 4 / 6 / 8 touch buttons, type-dependent
TEMPERATURE	
Sensor:	CMOS temperature sensor
Measuring Range:	–40...+125 °C, resolution: 0.1 °C
Accuracy:	typically ±0.5 °C (at +5...+60 °C)
HUMIDITY	
Sensor:	capacitative humidity sensor
Measuring Range:	0...100 % r.H., resolution: 0.1 % r.H.
Accuracy:	typically ±2 % r.H. (at +25 °C, 20...80 % r.H.) typically ±3 % r.H. (at +25 °C, 0...20 % r.H. or 80...100 % r.H.)
Electrical connection:	0.2 - 1.5 mm², via plug-in screw terminals
Enclosure:	plastic, black or white colour
Dimensions:	approx. 94.5 x 110 x 19.5 mm
Mounting:	using a plastic mounting plate (see dimensional drawing), on in-wall flush box, Ø 55 mm
Ambient temperature:	0...+50 °C (operation)
Permitted humidity:	0...90 % r. H. (without dew formation)
Protection type:	IP 30 (according to EN 60 529)
Standards:	CE conformity, electromagnetic compatibility according to EN 50491, EMC directive 2014 / 30 / EU
CONTROL	
RYMASKON 210:	Temperature up/down, Room occupancy, Menu
RYMASKON 220:	Temperature up/down, Fan speed up/down, Room occupancy, Menu
RYMASKON 230:	Temperature up/down, Fan speed up/down, Light on/off, Room occupancy, Menu
RYMASKON 240:	Temperature up/down, Sun protection up/down, Light on/off, Room occupancy, Menu
RYMASKON 250:	Temperature up/down, Fan speed up/down, Sun protection up/down, Room occupancy, Menu
RYMASKON 260:	Temperature up/down, Fan speed up/down, Sun protection up/down, Light, Menu
ACCESSORIES	see table

Display symbols — **RYM**ASKON® **200 - Modbus**



DIP Switch — **RYM**ASKON® **200-Modbus**

RS 485 bus termination	**DIP 1**
activated (default)	**ON**
deactivated	OFF

Connecting diagram — **RYM**ASKON® **200 - Modbus**

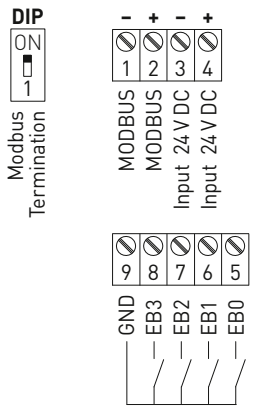

Room control unit for room automation, configurable, with multifunctional display and Modbus connection

Dimensional drawing — **RYMASKON® 200 - Modbus**

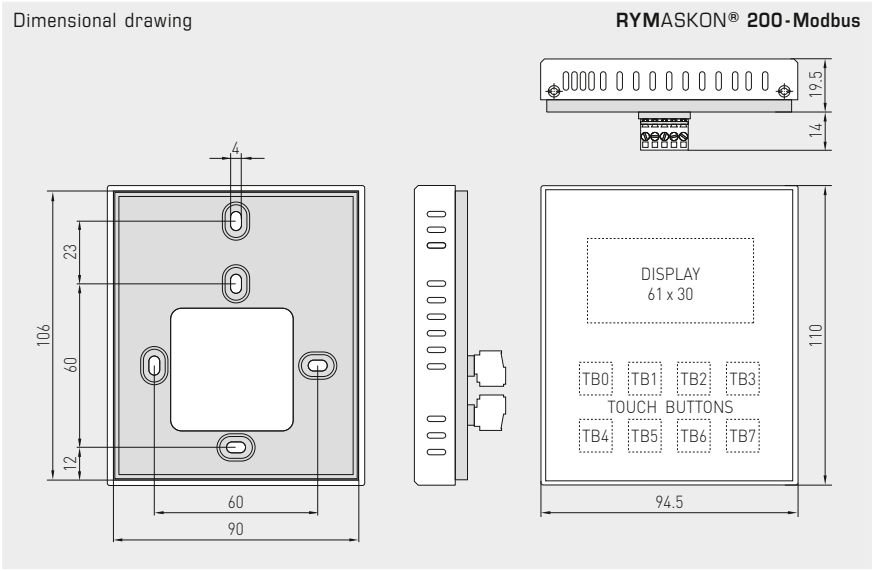

RYMASKON® 200 - Modbus
Type 231



Type 211



Type 221



Type 241



Type 251



Type 261



Type 212



Type 222



Type 242



Type 252



Type 262



RYMASKON® 200 - Modbus Room control unit for room automation

Type / WG02	Communication	Buttons	Control	Colour	Display	Item No.
RYMASKON® 210 - Modbus						
RYMASKON 211	RS485, NFC, NEC	4	**T** | – | – | – | **R** | **M**	black	■	1901-5111-3011-001
RYMASKON 212	RS485, NFC, NEC	4	**T** | – | – | – | **R** | **M**	white	■	1901-5111-3012-001
RYMASKON® 220 - Modbus						
RYMASKON 221	RS485, NFC, NEC	6	**T** | **V** | – | – | **R** | **M**	black	■	1901-5111-3011-002
RYMASKON 222	RS485, NFC, NEC	6	**T** | **V** | – | – | **R** | **M**	white	■	1901-5111-3012-002
RYMASKON® 230 - Modbus						
RYMASKON 231	RS485, NFC, NEC	8	**T** | **V** | – | **L** | **R** | **M**	black	■	1901-5111-3011-003
RYMASKON 232	RS485, NFC, NEC	8	**T** | **V** | – | **L** | **R** | **M**	white	■	1901-5111-3012-003
RYMASKON® 240 - Modbus						
RYMASKON 241	RS485, NFC, NEC	8	**T** | – | **S** | **L** | **R** | **M**	black	■	1901-5111-3011-004
RYMASKON 242	RS485, NFC, NEC	8	**T** | – | **S** | **L** | **R** | **M**	white	■	1901-5111-3012-004
RYMASKON® 250 - Modbus						
RYMASKON 251	RS485, NFC, NEC	8	**T** | **V** | **S** | – | **R** | **M**	black	■	1901-5111-3011-005
RYMASKON 252	RS485, NFC, NEC	8	**T** | **V** | **S** | – | **R** | **M**	white	■	1901-5111-3012-005
RYMASKON® 260 - Modbus						
RYMASKON 261	RS485, NFC, NEC	8	**T** | **V** | **S** | **L** | – | **M**	black	■	1901-5111-3011-006
RYMASKON 262	RS485, NFC, NEC	8	**T** | **V** | **S** | **L** | – | **M**	white	■	1901-5111-3012-006
Control:	**T** = Temperature **S** = Sun protection		**V** = Ventilation **L** = Light		**R** = Room occupancy **M** = Menu	
ACCESSORIES						
KA-2	**Modbus communication adapter** with USB/RS485 interface for system connection or/and as an active bus termination resistance					on request

HYGRASGARD® RFTF-Modbus-xx

Roomoperating humidity and temperature sensor (± 2.0 %), on-wall, for temperature, relative / absolute humidity, dew point, mixture ratio, enthalpy, calibratable, with Modbus connection

S+S REGELTECHNIK

The calibratable room sensor **HYGR**ASGARD® **RFTF-Modbus** with Modbus connection, with/without optional display in an elegant enclosure (Baldur 2) measures the relative humidity and temperature of the room air. These measurands are used to internally calculate various parameters. The Modbus can be used to retrieve the following parameters: relative humidity [% r. H.], absolute humidity [g/m³], mixture ratio [g/kg], dew point temperature [°C], enthalpy [kJ/kg] (ignoring atmospheric air pressure) and room temperature [°C].

As operating element you can chooce between a potentiometer, a 5-pole rotary switch or a presence button. For the temperature / relative humidity / absolute humidity / dew point / mixture ratio / enthalpy or setpoint output devices with LCD display are optionally available for displaying readings. Operating status can be displayed via a maximum of 5 multi-coloured LEDs. These displays (LCDs), as well as the retrieval of measurement and control values, are controlled via the Modbus interface.

RFTF-Modbus-PTD5 5L
with potentiometer, push-buttons, rotary switches and LED display



Display **Standard**

RFTF-Modbus Display



TECHNICAL DATA

Power supply:	24 V AC (± 20 %) and 15…36 V DC
Power consumption:	< 1 VA / 24 V DC, < 2.2 VA / 24 V AC
Sensor:	**Digital humidity sensor with integrated temperature sensor,** low hysteresis, high long-term stability
Data points:	Temperature, relative humidity, absolute humidity, dew point, mixture ratio, enthalpy and setpoint potentiometer, rotary switch and presence button
Measuring range:	0…100 % r.H. (humidity) 0…+ 50 °C (temperature)
Deviation, humidity:	typically **± 2.0** % (20…80 % r. H.) at +25 °C, otherwise ± 3.0 %
Temperature deviation:	typically ± 0.2 K at +25 °C
Zero point offset:	± 10 % r.H. (humidity) ± 10 °C (temperature) adjustable using potentiometer
Ambient temperature:	Storage –35…+85 °C; Operation 0…+50 °C
Medium:	clean air and other **non-aggressive**, non-combustible gases
Bus protocol:	Modbus (RTU mode), address range 0…**247** selectable, LEDs colour-programmable
Signal filtering:	4 s / 32 s
Enclosure:	plastic, material ABS, colour pure white (similar to RAL 9010)
Dimensions:	98 x 98 x 33 mm (Baldur 2)
Installation:	wall mounting or on in-wall flush box, Ø 55 mm, base with 4 holes, for attachment to vertically or horizontally installed in-wall flush boxes for rear cable entry, with predetermined breaking point for cable entry from top / bottom in case of plain on-wall installation
Long-term stability:	± 1 % / year
Permissible air humidity:	< 95 % r. H., non-precipitating air
Protection class:	III (according to EN 60 730)
Protection type:	IP 30 (according to EN 60 529)
Standards:	CE conformity according to EMC Directive 2014 / 30 / EU, according to EN 61 326
Features:	**Display with illumination,** two-line, programmable, cutout approx. 36 x 15 mm (W x H), to display actual humidity and temperature or a selectable parameter or an individually programmable display value
ACCESSORIES	see table

Schematic diagram **RFTF-Modbus**

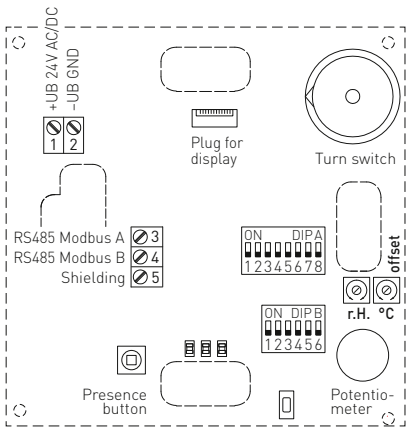

DIP A: Bus address
DIP B: Bus parameters (Baud rate, parity …)
Telegram indicator
Reception (LED green)
Error (LED red)
LED (internal status)
Offset correction temperature: ± 10°C
°C
Offset correction humidity: ± 10% r.H.
r.H.
Plug for display contact is on the right side

Roomoperating humidity and temperature sensor (± 2.0 %), on-wall, for temperature, relative / absolute humidity, dew point, mixture ratio, enthalpy, calibratable, with Modbus connection

Dimensional drawing — Enclosure **Baldur 2**

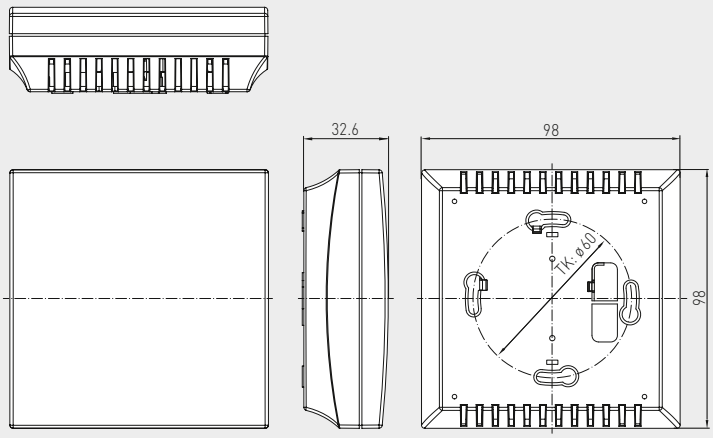

RFTF-Modbus-P T 5L
with display, potentiometer, push-buttons and LED display



Display
alternative output variables

RFTF-Modbus Display



By default, the display alternates between the **actual temperature** and the **actual humidity** (relative humidity). For improved legibility, backlighting is provided.

The Modbus interface allows the display to be **individually** configured both in the 7-segment area and in the dot-matrix area.

The **Modbus configuration** can be used to program an alternative output variable instead of the standard display.
In this case, the first line displays the value and index while the second line displays the corresponding unit.
The index identifies the display type:

Index 1 = temperature in **°C**
Index 2 = setpoint potentiometer in %
Index 3 = dew point in **°C**
Index 4 = relative humidity in % **r.H.**
Index 5 = absolute humidity in **g/m³**
Index 6 = mixture ratio in **g/kg**
Index 7 = enthalpy in **kJ/kg**

HYGRASGARD® RFTF-Modbus	Roomoperating humidity and temperature sensor				
Type / WG01	**Measuring Range / Readout** Humidity (switchable)		Temperature	**Output** / **Display**	**Item No.**
RFTF-Modbus-xx					
RFTF-MODBUS **P**	0...100 % r. H. 0...80 g / kg 0...80 g / m³ 0...85 kJ / kg –20...+80 °C	(default) (MR) (A.H.) (ENT.) (DP)	0...+50 °C	Modbus	1201-42B6-6001-005
RFTF-MODBUS **P** LCD	(5 x as above)		(1 x as above)	Modbus ■	1201-42B6-7001-005
RFTF-MODBUS **P 5L**	(5 x as above)		(1 x as above)	Modbus	1201-42B6-6119-005
RFTF-MODBUS **P 5L** LCD	(5 x as above)		(1 x as above)	Modbus ■	1201-42B6-7119-005
RFTF-MODBUS **P D5**	(5 x as above)		(1 x as above)	Modbus	1201-42B6-6012-841
RFTF-MODBUS **P D5 5L**	(5 x as above)		(1 x as above)	Modbus	1201-42B6-6120-841
RFTF-MODBUS**P T D5 5L**	(5 x as above)		(1 x as above)	Modbus	1201-42B6-6121-841
RFTF-MODBUS **P T**	(5 x as above)		(1 x as above)	Modbus	1201-42B6-6047-005
RFTF-MODBUS **P T** LCD	(5 x as above)		(1 x as above)	Modbus ■	1201-42B6-7047-005
RFTF-MODBUS **P T 5L**	(5 x as above)		(1 x as above)	Modbus	1201-42B6-6051-005
RFTF-MODBUS **P T 5L** LCD	(5 x as above)		(1 x as above)	Modbus ■	1201-42B6-7051-005
Equipment:	**P** = Potentiometer (setpoint setter) **T** = Presence push-buttons			**D5** = Rotary switch, 5-step **5L** = LED display, multi-colour (5x)	
ACCESSORIES					
KA-2	**Modbus communication adapter** with USB/RS485 interface for system connection or/and as an active bus termination resistance				on request

THERMASGARD® RTM1-Modbus

Room operating temperature sensor (± 2.0 %), on-wall, for temperature, relative humidity, dew point, calibratable, with Modbus connection

S+S REGELTECHNIK

Calibratable room temperature measuring transducer **THERM**ASGARD® **RTM1-Modbus** with Modbus connection, with /without optional display for displaying the actual temperature, in an elegant enclosure made of plastic, with snap-on lid, base with 4-hole attachment, for installation on vertically or horizontally installed in-wall flush boxes, with predetermined breaking point for on-wall cable entry.

The calibrateable room operating sensor measures the temperature of non-aggressive gases, particularly air. In this case, a setpoint potentiometer is available as an operating element. For temperature/humidity/dew point or setpoint readings, optional devices with LCD displays for displaying readings are available. The displays (LCD), as well as the retrieval of measurement and control values, are triggered via the Modbus interface.

TECHNICAL DATA

Voltage supply:	24 V AC (± 20 %) and 15…36 V DC
Power consumption:	< 1.0 VA / 24 V DC < 2.2 VA / 24 V AC
Sensor:	**digital humidity sensor** **with integrated temperature sensor,** low hysteresis, high long-term stability
Data points:	temperature, relative humidity, dew point, setpoint potentiometer
Measuring range:	0…+50 °C
Deviation, humidity:	typically **± 2.0** % (20…80 % r. H.) at +25 °C, otherwise ± 3.0 %
Temperature deviation:	typically ± 0.2 K at +25 °C
Zero point offset:	± 10 °C, adjustable by potentiometer
Ambient temperature:	storage –35…+85 °C; operation 0…+50 °C
Medium:	clean air and non-aggressive, non-combustible gases
Bus protocol:	Modbus (RTU mode), address range 0…**247** selectable
Signal filtering:	4 s / 32 s
Process connection:	by screws
Enclosure:	plastic, material ABS, colour pure white (similar to RAL 9010)
Dimensions:	85 x 85 x 27 mm (Baldur 1)
Installation:	wall mounting or on in-wall flush box, Ø 55 mm, base with 4 holes, for attachment to vertically or horizontally installed in-wall flush boxes for rear cable entry, with predetermined breaking point for cable entry from top /bottom in case of plain on-wall installation
Permissible air humidity:	< 95 % r. H., non-precipitating air
Protection class:	III (according to EN 60 730)
Protection type:	IP 30 (according to EN 60 529)
Standards:	CE conformity, electromagnetic compatibility according to EN 61326, according to EMC Directive 2014 / 30 / EU
Optional:	two-line **display with illumination**, programmable, cutout approx. 36 x 15 mm (W x H), for displaying the actual temperature or an individually programmable display value (The Modbus interface allows the display to be individually configured in the 7-segment area and in the dot-matrix area.)
ACCESSORIES	see table

RTM1-Modbus
Standard



Programmable display **RTM1-Modbus**



Schematic diagram **RTM1-Modbus**

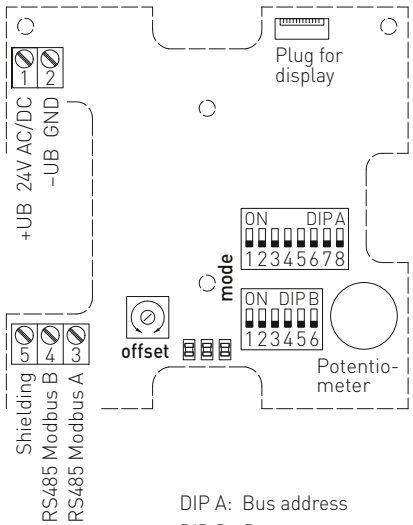

DIP A: Bus address
DIP B: Bus parameters (Baud rate, parity …)
Telegram indicator
Reception (LED green)
Error (LED red)
LED (internal status)
Offset correction temperature: ± 10°C
Plug for display contact is on the right side

Room operating temperature sensor (± 2.0 %), on-wall, for temperature, relative humidity, dew point, calibratable, with Modbus connection

Dimensional drawing — Enclosure **Baldur1**

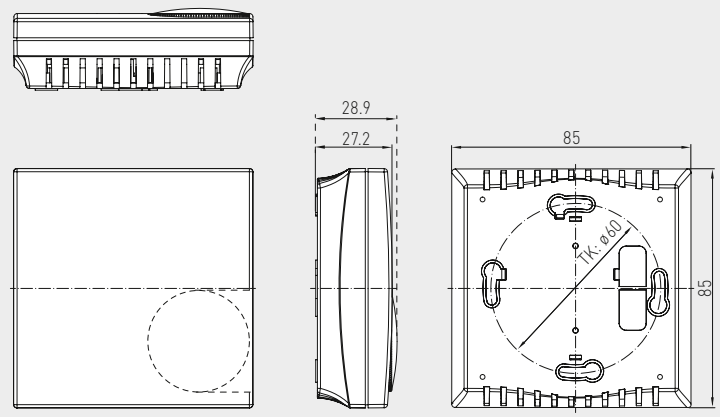

RTM1 - Modbus
with display



RTM1 - Modbus
with display

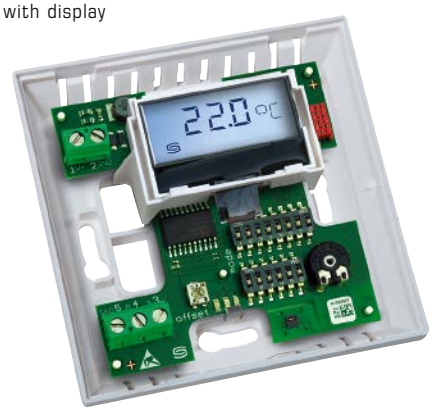

RTM1 - Modbus - P
with display and potentiometer



RTM1 - Modbus
without display

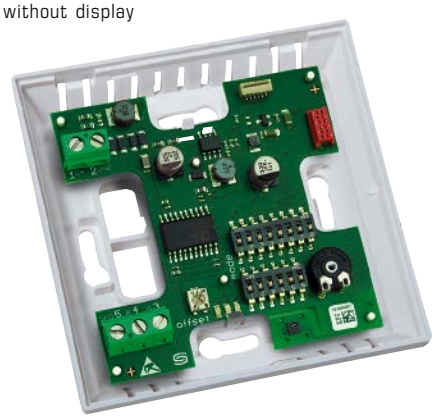

RTM1 - Modbus - P
with potentiometer



THERMASGARD® RTM 1 - Modbus Room operating temperature sensor

Type / WG01	Sensor	Output	Equipment	Display	Art. no.
RTM 1 - Modbus					**IP 30**
RTM1-MODBUS	digital	Modbus	–		1101-42A6-0000-000
RTM1-MODBUS LCD	digital	Modbus	–	■	1101-42A6-2000-000
RTM 1 - P - Modbus					**IP 30**
RTM1-MODBUS P	digital	Modbus	potentiometer		1101-42A6-0001-005
RTM1-MODBUS P LCD	digital	Modbus	potentiometer	■	1101-42A6-2001-005
ACCESSORIES					
KA-2	**Modbus communication adapter** with USB/RS485 interface for system connection or/and as an active bus termination resistance				on request

THERMASGARD® ATM 2 - Modbus - T3

Outside temperature / wet room temperature measuring transducers, calibratable, with Modbus connection

NEW

S+S REGELTECHNIK

Calibratable outside temperature measuring transducers **THERM**ASGARD® **ATM 2 - Modbus - T3** with Modbus connection, enclosure made from impact-resistant plastic with quick-locking screws, with / without optional display (for displaying actual temperature).

For the detection of outside temperatures, temperatures in wet rooms, e.g. for installation in outside walls, in cold storage buildings and greenhouses, in the industrial sector and in agriculture. Installation of the temperature transmitter in outside areas preferably at the north side of the building or in a protected place.

In cases of direct solar irradiation, we recommend the use of our **WS01** or **WS04** sun protection hood (accessory).

The outdoors sensors are factory-calibrated. Adjustment / fine adjustment by the user is possible (zero point offset is adjustable).

ATM 2 - Modbus - T3



TECHNICAL DATA

Voltage supply:	24 V AC (± 20 %) and 15...36 V DC
Power consumption:	< 2 W / 24 V DC; < 3.5 VA / 24 V AC
Sensor:	Pt1000, DIN EN 60751, class B
Measuring range:	–50...+150 °C
Temperature deviation:	typically ± 0.2 K at +25 °C
Zero point offset:	± 10 °C
Ambient temperature:	Measuring transducer –30...+70 °C
Medium:	clean air and non-aggressive, non-combustible gases
Error detection:	sensor breakage, sensor short circuit
Bus protocol:	Modbus (RTU mode), address range 0...**247** selectable
Signal filtering:	0.3 s / 1 s / 10 s
Process connection:	by screws
Enclosure:	plastic, UV-stabilised, material polyamide, 30 % glass-globe reinforced, with quick-locking screws (slotted / Phillips head combination), colour traffic white (similar to RAL 9016), enclosure cover for display is transparent!
Enclosure dimensions:	108 x 78.5 x 43.3 mm (Tyr 3 without display) 108 x 78.5 x 45.8 mm (Tyr 3 with display)
Cable gland:	2x M20 x 1.5; with strain relief, exchangeable, inner diameter 8 - 13 mm
Electrical connection:	0.2 - 1.5 mm², using push-in terminals
Permissible air humidity:	< 95 % r. H., non-precipitating air
Protection class:	III (according to EN 60 730)
Protection type:	IP 65 (according to EN 60 529)
Standards:	CE conformity, electromagnetic compatibility according to EN 61326, according to EMC Directive 2014 / 30 / EU
Optional:	**Display with illumination**, three-line, programmable, cutout approx. 51 x 29 mm (W x H), for displaying the actual temperature or an individually programmable display value (The Modbus interface allows the display to be individually configured in the 7-segment area and in the dot-matrix area.)
ACCESSORIES	see table

Schematic diagram **Modbus Tyr 3**

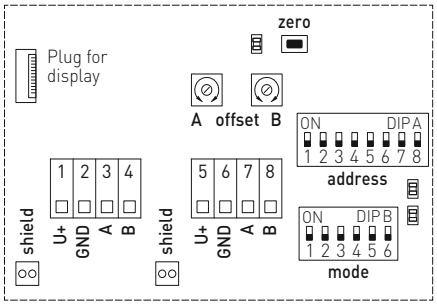

DIP A: Bus address
DIP B: Bus parameters (Baud rate, parity...)
Telegram indicator
Reception (LED green)
Error (LED red)
LED (internal status)
Reset button
Offset correction
Shielding

Programmable display screen **Modbus Tyr 3**

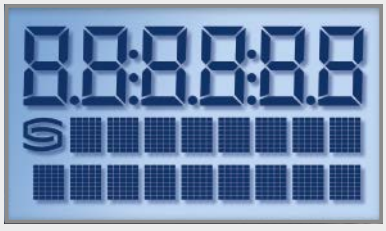

Dimensional drawing — ATM 2 - Modbus - T3

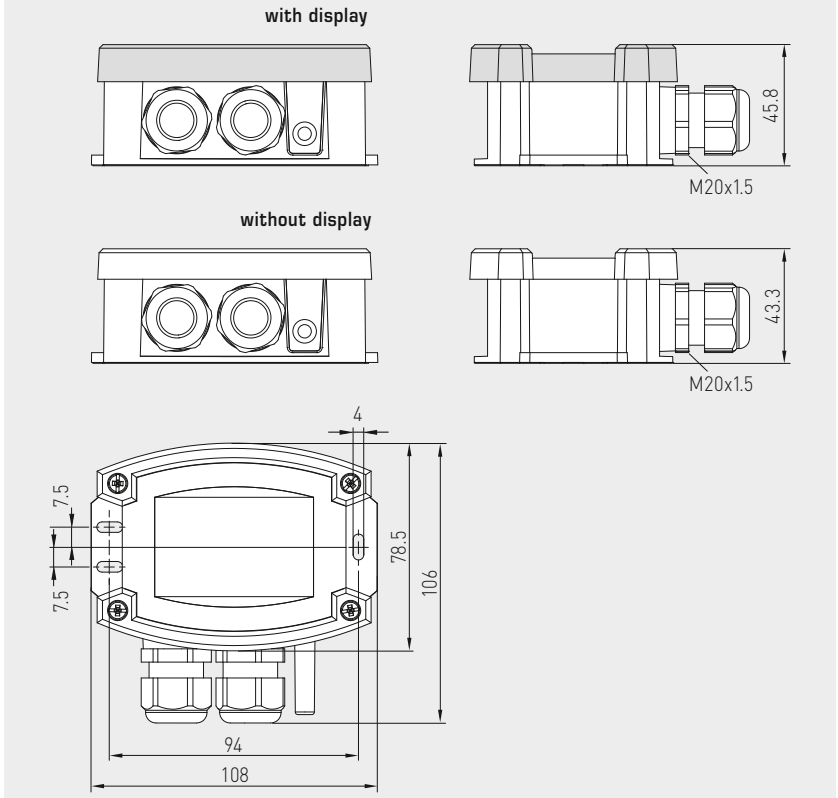

ATM 2 - Modbus - T3
with display







HYGRASGARD® ATM 2 - Modbus - T3 Outside temperature / wet room temperature measuring transducers

Type / WG01	Sensor	Output	Display	Item No.
ATM 2 - Modbus - T3				
ATM2-MODBUS-T3	Pt1000	Modbus		1101-12C6-0000-000
ATM2-MODBUS-T3 LCD	Pt1000	Modbus	■	1101-12C6-4000-000

ACCESSORIES		
KA-2	**Modbus communication adapter** with USB/RS485 interface for system connection or/and as an active bus termination resistance	on request
WS-01	**Sun and ball-impact protection hood,** 184 x 180 x 80 mm, stainless steel **V2A** (1.4301)	7100-0040-2000-000
WS-04	**Weather and sun protection hood,** 130 x 180 x 135 mm, stainless steel **V2A** (1.4301)	7100-0040-7000-000
	For further information, see last chapter Accessories!	

THERMASGARD® TM 65 - Modbus - T3

NEW

S+S REGELTECHNIK

Immersion / screw-in / duct temperature measuring transducer, calibratable, with Modbus connection

Patented quality product (Immersion sensor patent no. DE 10 2012 017 500.0)

Calibratable temperature measuring transducer with straight protective tube **THERM**ASGARD® **TM 65 - Modbus - T3** with Modbus connection, enclosure made from impact-resistant plastic with quick-locking screws, with / without optional display (for displaying actual temperature).

For the detection of temperatures in liquid or gaseous media. For aggressive media, stainless steel immersion sleeves must be used. Applications of the TM 65 are in piping systems, in heating technology, in ventilation and air conditioning ducts, in storage tanks, district heating compact stations, hot-water and cold-water systems, oil and lubricant circulation systems, in mechanical, apparatus, and plant engineering as well as throughout the industrial sector. The temperature measuring transducers are factory-calibrated. Adjustment / fine adjustment by the user is possible (zero point offset is adjustable).

TM 65 - Modbus - T3



TECHNICAL DATA

Voltage supply:	24 V AC (± 20 %) and 15...36 V DC
Power consumption:	< 2 W / 24 V DC; < 3.5 VA / 24 V AC
Sensor:	Pt1000, DIN EN 60751, class B (**Perfect Sensor Protection**)
Measuring range:	–50...+150 °C
Temperature deviation:	typically ± 0.2 K at +25 °C
Zero point offset:	± 10 °C
Ambient temperature:	Measuring transducer –30...+70 °C
Medium:	depending on selected immersion sleeve
Error detection:	sensor breakage, sensor short circuit
Bus protocol:	Modbus (RTU mode), address range 0...**247** selectable
Signal filtering:	0.3 s / 1 s / 10 s
Protective tube:	stainless steel, **V4A** (1.4571), Ø = 6 mm, inserted length (EL) = 50 - 400 mm (see table)
Enclosure:	plastic, UV-stabilised, material polyamide, 30 % glass-globe reinforced, with quick-locking screws (slotted / Phillips head combination), colour traffic white (similar to RAL 9016), enclosure cover for display is transparent!
Enclosure dimensions:	108 x 78.5 x 43.3 mm (Tyr 3 without display) 108 x 78.5 x 45.8 mm (Tyr 3 with display)
Cable gland:	2x M 20 x 1.5; with strain relief, exchangeable, inner diameter 8 - 13 mm
Electrical connection:	0.2 - 1.5 mm², using push-in terminals
Permissible air humidity:	< 95 % r. H., non-precipitating air
Protection class:	III (according to EN 60 730)
Protection type:	IP 65 (according to EN 60 529)
Standards:	CE conformity, electromagnetic compatibility according to EN 61326, according to EMC Directive 2014 / 30 / EU
Optional:	**Display with illumination**, three-line, programmable, cutout approx. 51 x 29 mm (W x H), for displaying the actual temperature or an individually programmable display value (The Modbus interface allows the display to be individually configured in the 7-segment area and in the dot-matrix area.)
ACCESSORIES	see table
MF - 15 - K	**Mounting flange** plastic, 56.8 x 84.3 mm, Ø = 15.2 mm tube gland, T_{max} = +100 °C
TH 08 - ms / xx	**Immersion sleeve**, brass, **nickel-plated,** Ø = 8 mm, T_{max} = +150 °C, p_{max} = 10 bar
TH 08 - VA / xx	**Immersion sleeve**, stainless steel, **V4A** (1.4571), Ø = 8 mm, T_{max} = +600 °C, p_{max} = 40 bar
TH 08 - VA / xx / 90	**Immersion sleeve**, stainless steel, **V4A** (1.4571), with neck tube (90 mm) Ø = 8 mm, T_{max} = +600 °C, p_{max} = 40 bar

Schematic diagram **Modbus Tyr 3**

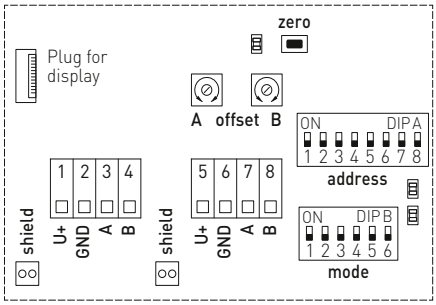

DIP A: Bus address
DIP B: Bus parameters (Baud rate, parity...)
Telegram indicator
Reception (LED green)
Error (LED red)
LED (internal status)
Reset button
Offset correction
Shielding

Programmable display screen **Modbus Tyr 3**

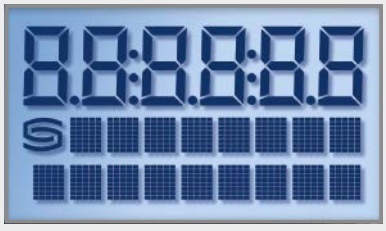

Immersion / screw-in / duct temperature measuring transducer, calibratable, with Modbus connection

Dimensional drawing — **TM 65 - Modbus - T3**

with display

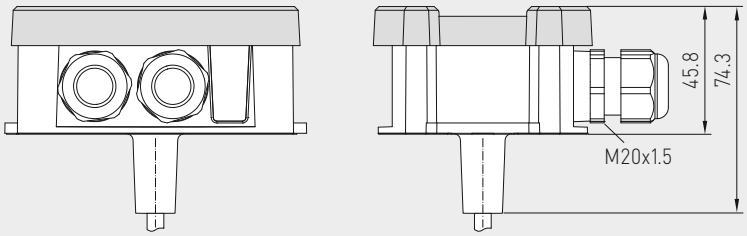

without display

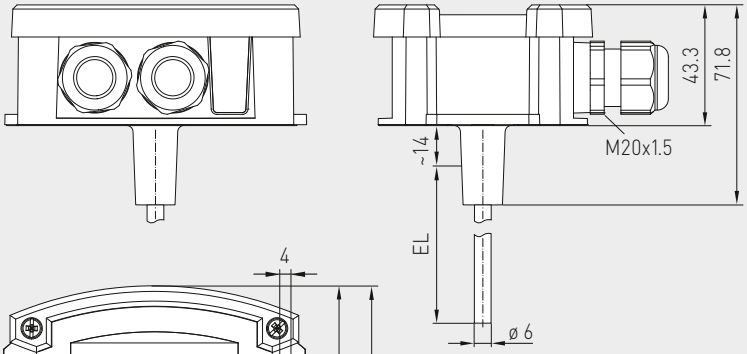

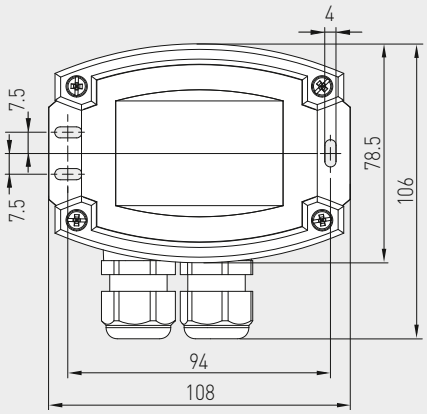

TM 65 - Modbus - T3
with display



High-performance encapsulation against vibration, mechanical stress and humidity

PS-PROTECTION
PERFECT SENSOR PROTECTION





THERMASGARD® TM 65 - Modbus - T3 Temperature sensor (basic device)

Type / WG01	Output	Inserted Length (EL)	Display	Item No.
TM65 - Modbus - T3				**IP 65**
TM65-MODBUS-T3 50MM	Modbus	**50 mm**		1101-7236-0010-000
TM65-MODBUS-T3 50MM LCD	Modbus	**50 mm**	■	1101-7236-4010-000
TM65-MODBUS-T3 100MM	Modbus	**100 mm**		1101-7236-0020-000
TM65-MODBUS-T3 100MM LCD	Modbus	**100 mm**	■	1101-7236-4020-000
TM65-MODBUS-T3 150MM	Modbus	**150 mm**		1101-7236-0030-000
TM65-MODBUS-T3 150MM LCD	Modbus	**150 mm**	■	1101-7236-4030-000
TM65-MODBUS-T3 200MM	Modbus	**200 mm**		1101-7236-0040-000
TM65-MODBUS-T3 200MM LCD	Modbus	**200 mm**	■	1101-7236-4040-000
TM65-MODBUS-T3 250MM	Modbus	**250 mm**		1101-7236-0050-000
TM65-MODBUS-T3 250MM LCD	Modbus	**250 mm**	■	1101-7236-4050-000
TM65-MODBUS-T3 300MM	Modbus	**300 mm**		1101-7236-0060-000
TM65-MODBUS-T3 300MM LCD	Modbus	**300 mm**	■	1101-7236-4060-000
TM65-MODBUS-T3 350MM	Modbus	**350 mm**		1101-7236-0070-000
TM65-MODBUS-T3 350MM LCD	Modbus	**350 mm**	■	1101-7236-4070-000
TM65-MODBUS-T3 400MM	Modbus	**400 mm**		1101-7236-0080-000
TM65-MODBUS-T3 400MM LCD	Modbus	**400 mm**	■	1101-7236-4080-000
ACCESSORIES				
KA-2	**Modbus communication adapter** with USB/RS485 interface for system connection or/and as an active bus termination resistance			on request

NEW

S+S REGELTECHNIK

Immersion / screw-in / duct temperature measuring transducer, calibratable, with Modbus connection

One basic device in four variants ...



TM 65 - Modbus - T3 + TH 08 - ms / xx

Immersion / screw-in temperature sensor with immersion sleeve, brass, nickel-plated



TM 65 - Modbus - T3 + TH 08 - VA / xx

Immersion / screw-in temperature sensor with immersion sleeve, stainless steel, V4A



TM 65 - Modbus - T3 + TH 08 - VA / xx / 90

Immersion / screw-in temperature sensor with immersion sleeve with neck tube, stainless steel, V4A



TM 65 - Modbus - T3 + MF - 15 - K

Duct temperature sensor with mounting flange, plastic

Dimensional drawing
TH 08 - ms / xx

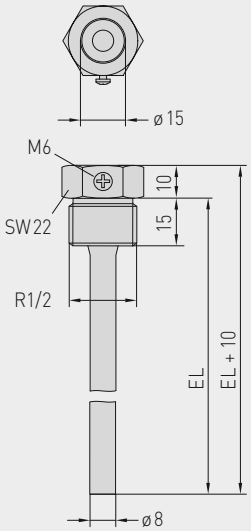

Dimensional drawing
TH 08 - VA / xx

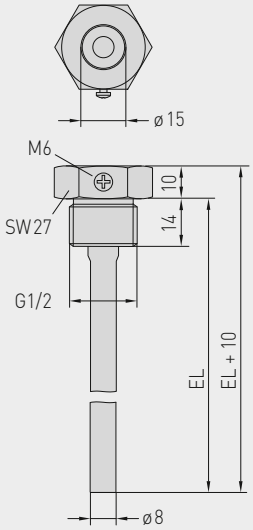

Dimensional drawing
TH 08 - VA / xx / 90

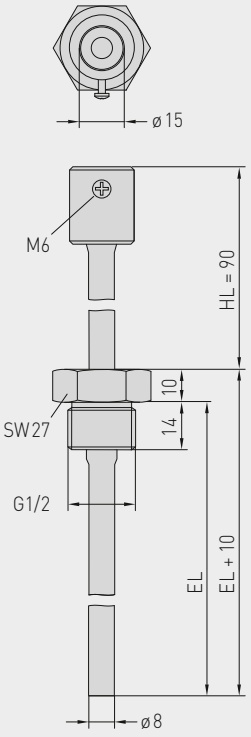

Dimensional drawing
MF - 15 - K

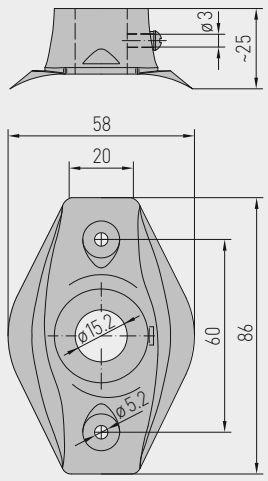

... through combination with accessories:



TH 08 - ms / xx

Immersion sleeve, brass, nickel-plated, thread-sealing, conical, according to DIN 10226



TH 08 - VA / xx

Immersion sleeve, stainless steel, V4A, flat-sealing, cylindrical, according to DIN 228



TH 08 - VA / xx / 90

Immersion sleeve with neck tube, stainless steel, V4A, flat-sealing, cylindrical, according to DIN 228



MF - 15 - K

Mounting flange, plastic

THERMASGARD® TH 08 Immersion sleeve Ø 8 mm (Accessories)				
Type / WG01B	**p_{max} (static)**	**T_{max}**	**Inserted Length (EL)**	**Item No.**
TH 08 - ms / xx	**Brass nickel-plated**			without neck tube
TH08-MS 50MM	10 bar	+150 °C	**50 mm**	7100-0011-0010-132
TH08-MS 100MM	10 bar	+150 °C	**100 mm**	7100-0011-0020-132
TH08-MS 150MM	10 bar	+150 °C	**150 mm**	7100-0011-0030-132
TH08-MS 200MM	10 bar	+150 °C	**200 mm**	7100-0011-0040-132
TH08-MS 250MM	10 bar	+150 °C	**250 mm**	7100-0011-0050-132
TH08-MS 300MM	10 bar	+150 °C	**300 mm**	7100-0011-0060-132
TH08-MS 350MM	10 bar	+150 °C	**350 mm**	7100-0011-0070-132
TH08-MS 400MM	10 bar	+150 °C	**400 mm**	7100-0011-0080-132
TH 08 - VA / xx	**Stainless steel V4A** (1.4571)			without neck tube
TH08-VA 50MM	40 bar	+600 °C	**50 mm**	7100-0012-0010-132
TH08-VA 100MM	40 bar	+600 °C	**100 mm**	7100-0012-0020-132
TH08-VA 150MM	40 bar	+600 °C	**150 mm**	7100-0012-0030-132
TH08-VA 200MM	40 bar	+600 °C	**200 mm**	7100-0012-0040-132
TH08-VA 250MM	40 bar	+600 °C	**250 mm**	7100-0012-0050-132
TH08-VA 300MM	40 bar	+600 °C	**300 mm**	7100-0012-0060-132
TH08-VA 350MM	40 bar	+600 °C	**350 mm**	7100-0012-0070-132
TH08-VA 400MM	40 bar	+600 °C	**400 mm**	7100-0012-0080-132
TH 08 - VA / xx / 90	**Stainless steel V4A** (1.4571)			**with neck tube** (90 mm)
TH08-VA 50/90MM	40 bar	+600 °C	**50 mm**	7100-0012-0012-132
TH08-VA 100/90MM	40 bar	+600 °C	**100 mm**	7100-0012-0022-132
TH08-VA 150/90MM	40 bar	+600 °C	**150 mm**	7100-0012-0032-132
TH08-VA 200/90MM	40 bar	+600 °C	**200 mm**	7100-0012-0042-132
TH08-VA 250/90MM	40 bar	+600 °C	**250 mm**	7100-0012-0052-132
TH08-VA 300/90MM	40 bar	+600 °C	**300 mm**	7100-0012-0062-132
Note:	inner diameter of socket 15.0 mm For further information see last chapter!			

Mounting flange (Accessories)		
Type / WG01B		**Item No.**
MF		
MF - 15 - K	**Mounting flange,** plastic, 56.8 x 84.3 mm, Ø 15.2 mm tube gland, T_{max} +100°C	7100-0032-0000-000
Note:	For information see last chapter!	

THERMASGARD® MWTM - Modbus - T3

**Mean value temperature measuring transducers,
incl. mounting flange, calibratable,
with Modbus connection**

NEW

S+S REGELTECHNIK

Calibratable mean value temperature measuring transducer **THERM**ASGARD® **MWTM - Modbus - T3** with Modbus connection, flexible, fully active sensor rod and plastic-coated copper protective tube (robust version), enclosure made from impact-resistant plastic with quick-locking screws.

The rod sensor is used for detecting average temperatures (mean values) in gaseous media, e.g. in ventilation and air conditioning ducts over the entire cross-section, or over a defined length. Laid along a meandering route, it uniformly detects the surrounding temperature as a duct sensor. The mean value sensors are factory-calibrated. Adjustment / fine adjustment by the user is possible (zero point offset is adjustable).

The MWTM is available in lengths of 0.4...20 m and is supplied with a mounting flange as standard. Mounting clamps **MK-05-M** are available as optional accessories.

MWTM - Modbus - T3
Rod Length
3 m / 6 m



TECHNICAL DATA

Voltage supply:	24 V AC (±20 %) and 15...36 V DC
Power consumption:	< 2 W / 24 V DC; < 3.5 VA / 24 V AC
Sensor:	Pt1000, DIN EN 60751, class B
Measuring range:	−50...+150 °C; T_{min} **−50 °C**, T_{max} **+80 °C**
Temperature deviation:	typically ±0.2 K at +25 °C
Zero point offset:	±10 °C
Ambient temperature:	Measuring transducer −30...+70 °C
Medium:	clean air and non-aggressive, non-combustible gases
Error detection:	sensor breakage, sensor short circuit
Bus protocol:	Modbus (RTU mode), address range 0...**247** selectable
Signal filtering:	0.3 s / 1 s / 10 s
Sleeve:	stainless steel **V4A** (1.4571)
Rod material:	**copper sensor tube, plastic-coated,** with spring for buckling protection
Sensor and rod dimensions:	Ø = 5.0 mm, nominal length (NL) = 0.4 m / 3 m / 6 m (nominal length optional up to max. 20 m)
Active length:	active along the entire sensor length
Enclosure:	plastic, UV-stabilised, material polyamide, 30 % glass-globe reinforced, with quick-locking screws (slotted / Phillips head combination), colour traffic white (similar to RAL 9016), enclosure cover for display is transparent!
Enclosure dimensions:	108 x 78.5 x 43.3 mm (Tyr 3 without display) 108 x 78.5 x 45.8 mm (Tyr 3 with display)
Cable gland:	2x M20 x 1.5; with strain relief, exchangeable, inner diameter 8 - 13 mm
Electrical connection:	0.2 - 1.5 mm², using push-in terminals
Installation:	observe minimum bending radius of 35 mm and permissible vibration load, ≤ ½ G
Process connection:	by mounting flange, plastic (galvanised steel optional, see accessories) and mounting clamps MK - 05 - M
Permissible air humidity:	< 95 % r. H., non-precipitating air
Protection class:	III (according to EN 60 730)
Protection type:	IP 65 (according to EN 60 529)
Standards:	CE conformity, electromagnetic compatibility according to EN 61326, according to EMC Directive 2014 / 30 / EU
Optional:	**Display with illumination,** three-line, programmable, cutout approx. 51 x 29 mm (W x H), for displaying the actual temperature or an individually programmable display value (The Modbus interface allows the display to be individually configured in the 7-segment area and in the dot-matrix area.)
ACCESSORIES	see table

Schematic diagram **Modbus Tyr 3**

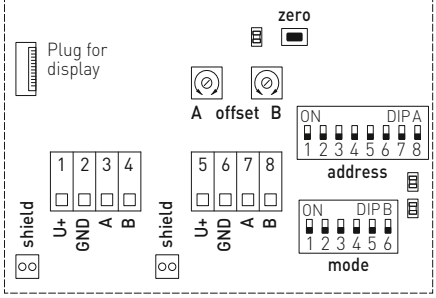

DIP A: Bus address
DIP B: Bus parameters (Baud rate, parity...)
Telegram indicator
Reception (LED green)
Error (LED red)
LED (internal status)
Reset button
Offset correction
Shielding

Programmable display screen **Modbus Tyr 3**

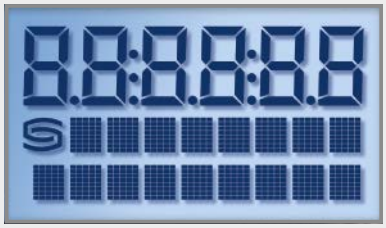

NEW

THERMASGARD® MWTM-Modbus-T3

Mean value temperature measuring transducers, incl. mounting flange, calibratable, with Modbus connection

Dimensional drawing

MWTM-Modbus-T3

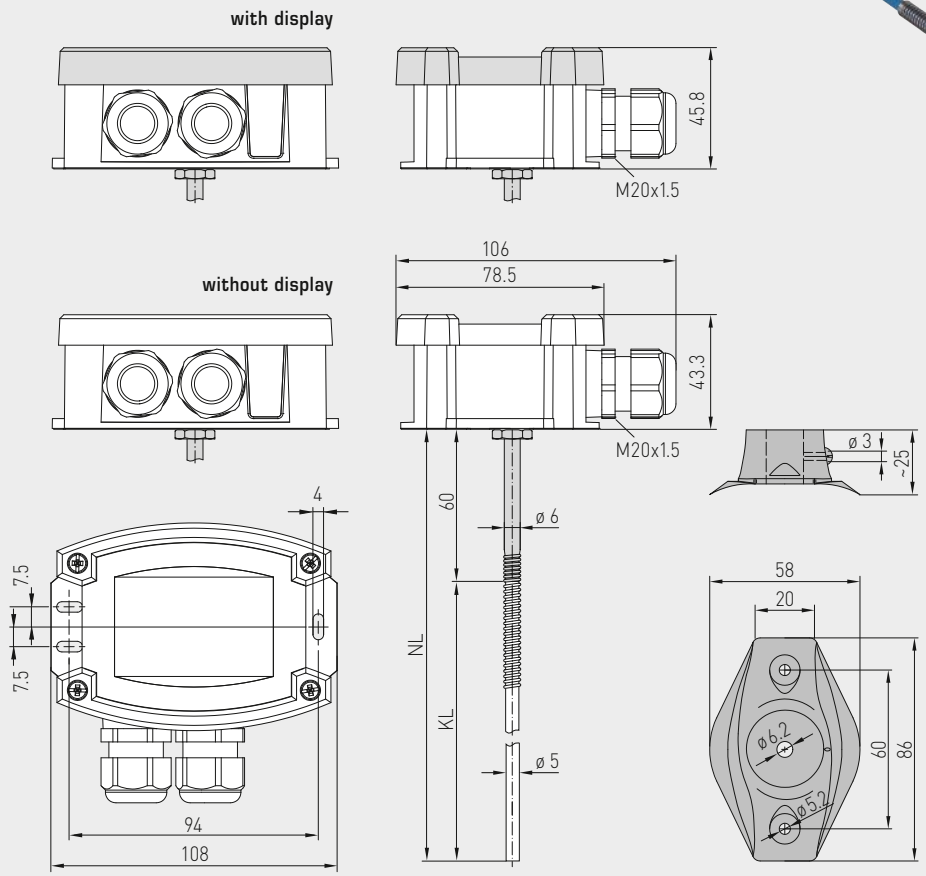

MWTM-Modbus-T3
Rod Length
0.4 m



MF-06-K
Mounting flange, plastic
(included in the scope of delivery)



MK-05-M
Galvanised steel mounting clamps
(optional)



MF-06-M
Mounting flange, metal
(optional)



KRD-04
Capillary tube gland bracket, plastic
(optional)



THERMASGARD® MWTM-Modbus-T3 Mean value temperature measuring transducers

Type / WG01	Sensor	Output	Rod Length (NL)	Display	Item No.
MWTM-Modbus-T3					**IP 65**
MWTM-MODBUS-T3 0,4M	Pt1000	Modbus	**0.4 m**		1101-3266-0080-000
MWTM-MODBUS-T3 0,4M LCD	Pt1000	Modbus	**0.4 m**	■	1101-3266-4080-000
MWTM-MODBUS-T3 3M	Pt1000	Modbus	**3.0 m**		1101-3266-0230-000
MWTM-MODBUS-T3 3M LCD	Pt1000	Modbus	**3.0 m**	■	1101-3266-4230-000
MWTM-MODBUS-T3 6M	Pt1000	Modbus	**6.0 m**		1101-3266-0260-000
MWTM-MODBUS-T3 6M LCD	Pt1000	Modbus	**6.0 m**	■	1101-3266-4260-000
Extra charge:	Per meter sensor cable (from 6 m to max. 20 m)				on request

ACCESSORIES		
KA-2	**Modbus communication adapter** with USB/RS485 interface for system connection or/and as an active bus termination resistance	on request
MF-06-K	**Mounting flange,** plastic (included in the scope of delivery)	7100-0030-1000-000
MF-06-M	**Mounting flange,** metal, galvanised steel, Ø = 35 mm	7100-0030-5000-000
KRD-04	**Capillary tube gland bracket,** plastic	7100-0030-7000-000
MK-05-M	Galvanised steel **mounting clamps** (6 pieces)	7100-0034-0000-000
	For further information, see last chapter Accessories!	

THERMASGARD® HFTM - Modbus - T3

NEW

S+S REGELTECHNIK

Sleeve sensor with temperature measuring transducer, calibratable, with Modbus connection

Calibratable temperature measuring transducer with sleeve sensor **THERM**ASGARD® **HFTM - Modbus - T3** with Modbus connection, enclosure made from impact-resistant plastic with quick-locking screws, with /without optional display for displaying the actual temperature.

The temperature transmitter with remote sensor is used for temperature detection in liquid and gaseous media e.g. by installation inside an immersion sleeve or as a duct sensor. The sensors are factory-calibrated. Adjustment / fine adjustment by the user is possible (zero point offset is adjustable).

HFTM - Modbus - T3



TECHNICAL DATA

Voltage supply:	24 V AC (±20 %) and 15...36 V DC
Power consumption:	< 2 W / 24 V DC; < 3.5 VA / 24 V AC
Sensor:	Pt1000, DIN EN 60751, class B (**Perfect Sensor Protection** with IP68)
Measuring range:	–50...+150 °C
Temperature deviation:	typically ±0.2 K at +25 °C
Zero point offset:	±10 °C
Ambient temperature:	Measuring transducer –30...+70 °C
Medium:	clean air and non-aggressive, non-combustible gases
Error detection:	sensor breakage, sensor short circuit
Bus protocol:	Modbus (RTU mode), address range 0...**247** selectable
Signal filtering:	0.3 s / 1 s / 10 s
Protective tube: (sensor sleeve)	stainless steel, **V4A** (1.4571), Ø = 6 mm, nominal length = 50 mm (other dimensions optional) cable entry stamped (optional rolled)
Connection cable:	silicone, SiHF, 2 x 0.25 mm², cable length (KL) = 1.5 m (other lengths and range limits optional, e.g. PTFE leads up to +250 °C or glass fibre with steel wire mesh up to +350°C)
Enclosure:	plastic, UV-stabilised, material polyamide, 30 % glass-globe reinforced, with quick-locking screws (slotted / Phillips head combination), colour traffic white (similar to RAL 9016), enclosure cover for display is transparent!
Enclosure dimensions:	108 x 78.5 x 43.3 mm (Tyr 3 without display) 108 x 78.5 x 45.8 mm (Tyr 3 with display)
Cable gland:	2x M20 x 1.5; with strain relief, exchangeable, inner diameter 8 - 13 mm
Electrical connection:	0.2 - 1.5 mm², using push-in terminals
Permissible air humidity:	< 95 % r. H., non-precipitating air
Protection class:	III (according to EN 60 730)
Protection type:	**IP 65** (according to EN 60 529) humidity-tight **stamped** **IP 68** (optional watertight compound-filled*) **rolled** **IP 54** (optional **glass fibre** cable)
Standards:	CE conformity, electromagnetic compatibility according to EN 61326, according to EMC Directive 2014 / 30 / EU
Optional:	**Display with illumination,** three-line, programmable, cutout approx. 51 x 29 mm (W x H), for displaying the actual temperature or an individually programmable display value (The Modbus interface allows the display to be individually configured in the 7-segment area and in the dot-matrix area.)
ACCESSORIES	see table
THE-xx	**Immersion sleeve**, stainless steel **V4A** (1.4571) or nickel-plated brass, Ø = 9 mm, inner diameter of socket 5.2 mm, with **adjusting screw** M12 x 1.5

Schematic diagram **Modbus Tyr 3**

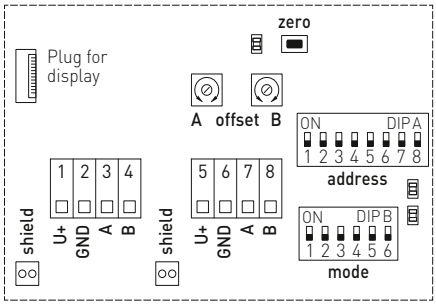

DIP A: Bus address
DIP B: Bus parameters (Baud rate, parity...)
Telegram indicator
Reception (LED green)
Error (LED red)
LED (internal status)
Reset button
Offset correction
Shielding

Programmable display screen **Modbus Tyr 3**

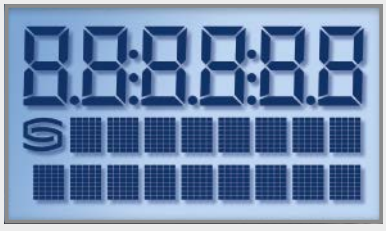

Sleeve sensor with temperature measuring transducer, calibratable, with Modbus connection

Dimensional drawing **HFTM-Modbus-T3**

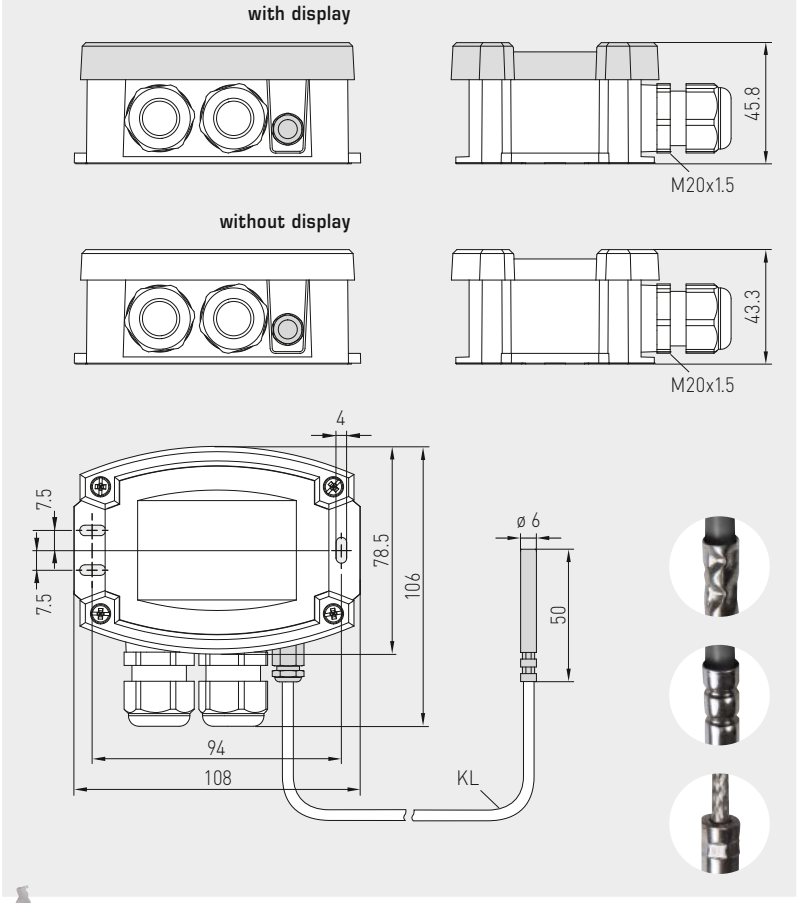

HFTM-Modbus-T3
with display



IP65 (standard)
humidity-tight **stamped**

IP68 (optional)
watertight compound-filled*, **rolled**

IP54 (optional)
with **glass fibre** cable





* High-performance encapsulation against vibration, mechanical stress and humidity

PS-PROTECTION
PERFECT SENSOR PROTECTION

THERMASGARD® HFTM-Modbus-T3 Sleeve sensor with temperature measuring transducer					
Type / WG01	**Sensor**	**Output**	**Type**	**Display**	**Item No.**
HFTM-Modbus-T3					
HFTM-MODBUS-T3	Pt1000	Modbus	Remote sensor		1101-62A6-0210-000
HFTM-MODBUS-T3 LCD	Pt1000	Modbus	Remote sensor	■	1101-62A6-4210-000
Extra charge:	Protection type **IP68** (sensor sleeve watertight compound-filled) per running metre of connecting lead (**silicone / PTFE / glass fibre**) other protection sleeve lengths optional				on request on request

ACCESSORIES		
KA-2	**Modbus communication adapter** with USB/RS485 interface for system connection or/and as an active bus termination resistance	on request
THE-xx	**Immersion sleeve**, stainless steel **V4A** (1.4571) or nickel-plated brass, Ø = 9 mm For further information, see last chapter Accessories!	

THERMASGARD® ALTM1 - Modbus - T3

Surface contact temperature / tube contact temperature measuring transducers, incl. strap, compact variant, calibratable, with Modbus connection

NEW

S+S REGELTECHNIK

Calibratable tube contact temperature measuring transducers with strap **THERM**ASGARD® **ALTM1 - Modbus - T3** with Modbus connection, enclosure made from impact-resistant plastic with quick-locking screws, with / without optional display (for displaying actual temperature).

The surface contact sensor is used for temperature detection on piping, tubes (e.g. cold- and hot-water) or on heating sections for heating system control. The tube sensors are factory-calibrated. Adjustment / fine adjustment by the user is possible (zero point offset is adjustable).

ALTM 1 - Modbus - T3
with strap



TECHNICAL DATA

Voltage supply:	24 V AC (± 20 %) and 15...36 V DC
Power consumption:	< 2 W / 24 V DC; < 3.5 VA / 24 V AC
Sensor:	Pt1000, DIN EN 60751, class B
Measuring range:	–50...+150 °C Compact variant: **T_{max} up to +100 °C**
Temperature deviation:	typically ± 0.2 K at +25 °C
Zero point offset:	± 10 °C
Ambient temperature:	Measuring transducer –30...+70 °C
Error detection:	sensor breakage, sensor short circuit
Bus protocol:	Modbus (RTU mode), address range 0...**247** selectable
Signal filtering:	0.3 s / 1 s / 10 s
Process connection:	endless metal strap and metal tightener (included in scope of delivery)
Strap dimensions:	Ø = 13 - 92 mm (¼ - 3"), L = 300 mm
Enclosure:	plastic, UV-stabilised, material polyamide, 30 % glass-globe reinforced, with quick-locking screws (slotted / Phillips head combination), colour traffic white (similar to RAL 9016), enclosure cover for display is transparent!
Enclosure dimensions:	108 x 78.5 x 43.3 mm (Tyr 3 without display) 108 x 78.5 x 45.8 mm (Tyr 3 with display)
Cable gland:	2x M 20 x 1.5; with strain relief, exchangeable, inner diameter 8 - 13 mm
Electrical connection:	0.2 - 1.5 mm², using push-in terminals
Permissible air humidity:	< 95 % r. H., non-precipitating air
Protection class:	III (according to EN 60 730)
Protection type:	IP 65 (according to EN 60 529)
Standards:	CE conformity, electromagnetic compatibility according to EN 61326, according to EMC Directive 2014 / 30 / EU
Optional:	**Display with illumination,** three-line, programmable, cutout approx. 51 x 29 mm (W x H), for displaying the actual temperature or an individually programmable display value (The Modbus interface allows the display to be individually configured in the 7-segment area and in the dot-matrix area.)
ACCESSORIES	see table

Schematic diagram **Modbus Tyr 3**

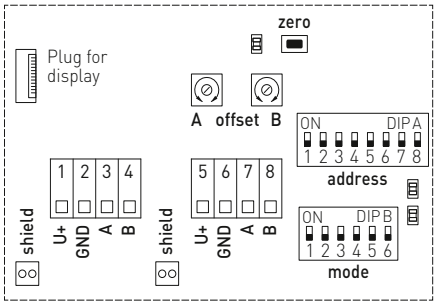

Programmable display screen **Modbus Tyr 3**

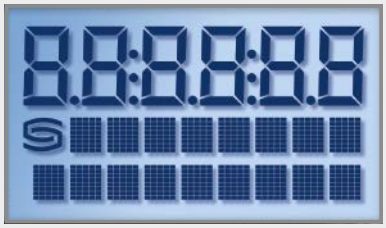

NEW

THERMASGARD® ALTM1 - Modbus - T3

Surface contact temperature / tube contact temperature measuring transducers, incl. strap, compact variant, calibratable, with Modbus connection

Dimensional drawing **ALTM 1 - Modbus - T3**

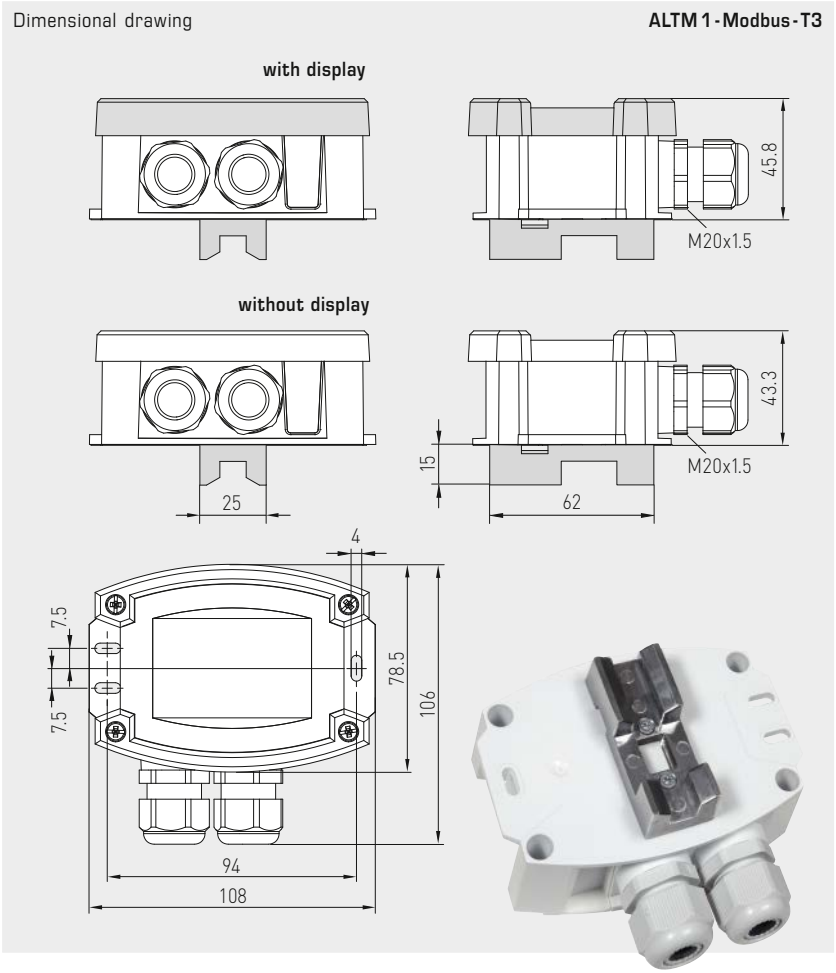

ALTM 1 - Modbus - T3
with strap
with display







THERMASGARD® ALTM 1 - Modbus - T3	Surface contact temperature / tube contact temperature measuring transducers				
Type / WG01	**Sensor**	**Output**	**Type**	**Display**	**Item No.**
ALTM 1 - Modbus - T3					
ALTM1-MODBUS-T3	Pt1000	Modbus	Compact		1101-12B6-0000-000
ALTM1-MODBUS-T3 LCD	Pt1000	Modbus	Compact	■	1101-12B6-4000-000

ACCESSORIES		
KA-2	**Modbus communication adapter** with USB/RS485 interface for system connection or/and as an active bus termination resistance	on request
WLP-1	**Heat-conductive paste**, silicone-free	7100-0060-1000-000
	For further information, see last chapter Accessories!	

THERMASGARD® ALTM 2 - Modbus - T3

Surface contact temperature / tube contact temperature measuring transducers, incl. strap, with detached sensor head, calibratable, with Modbus connection

NEW

S+S REGELTECHNIK

Calibratable tube contact temperature measuring transducers with detached sensor head and strap **THERM**ASGARD®**ALTM 2 - Modbus - T3** with Modbus connection, enclosure made from impact-resistant plastic with quick-locking screws, with / without optional display for displaying actual temperature.

The surface contact sensor is used for temperature detection on piping, tubes (e.g. cold- and hot-water) or on heating sections for heating system control. The tube sensors are factory-calibrated. Adjustment / fine adjustment by the user is possible (zero point offset is adjustable).

ALTM 2 - Modbus - T3
(with detached sensor head)



TECHNICAL DATA

Voltage supply:	24 V AC (± 20 %) and 15...36 V DC
Power consumption:	< 2 W / 24 V DC < 3.5 VA / 24 V AC
Sensor:	Pt1000, DIN EN 60751, class B (**Perfect Sensor Protection** with IP68)
Measuring range:	–50...+150 °C detached sensor variant: T_{max} **to +150 °C**
Temperature deviation:	typically ± 0.2 K at +25 °C
Zero point offset:	± 10 °C
Ambient temperature:	Measuring transducer –30...+70 °C
Medium:	clean air and non-aggressive, non-combustible gases
Error detection:	sensor breakage, sensor short circuit
Bus protocol:	Modbus (RTU mode), address range 0...**247** selectable
Signal filtering:	0.3 s / 1 s / 10 s
Process connection:	endless metal strap and metal tightener (included in scope of delivery)
Strap dimensions:	Ø = 13 - 92 mm (¼ - 3"), L = 300 mm
Enclosure:	plastic, UV-stabilised, material polyamide, 30 % glass-globe reinforced, with quick-locking screws (slotted / Phillips head combination), colour traffic white (similar to RAL 9016), enclosure cover for display is transparent!
Enclosure dimensions:	108 x 78.5 x 43.3 mm (Tyr 3 without display) 108 x 78.5 x 45.8 mm (Tyr 3 with display)
Cable gland:	2x M 20 x 1.5; with strain relief, exchangeable, inner diameter 8 - 13 mm
Electrical connection:	0.2 - 1.5 mm², using push-in terminals
Connection cable:	silicone, SiHF, 2 x 0.25 mm², cable length (KL) = 1.5 m (other lengths and range limits optional, e.g. PTFE leads up to + 250 °C or glass fibre with steel wire mesh up to + 350°C)
Permissible air humidity:	< 95 % r. H., non-precipitating air
Protection class:	III (according to EN 60 730)
Protection type:	**IP 65** (according to EN 60 529) humidity-tight stamped **IP 68** (optional sensor sleeve watertight compound-filled*)
Standards:	CE conformity, electromagnetic compatibility according to EN 61326, according to EMC Directive 2014 / 30 / EU
Optional:	**Display with illumination,** three-line, programmable, cutout approx. 51 x 29 mm (W x H), for displaying the actual temperature or an individually programmable display value (The Modbus interface allows the display to be individually configured in the 7-segment area and in the dot-matrix area.)
ACCESSORIES	see table

Schematic diagram **Modbus Tyr 3**

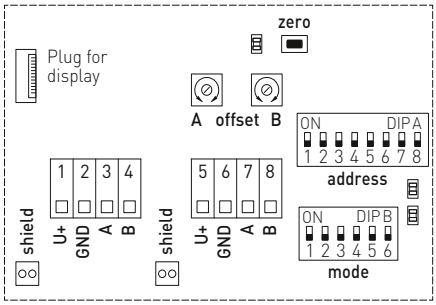

DIP A: Bus address
DIP B: Bus parameters (Baud rate, parity...)
Telegram indicator
Reception (LED green)
Error (LED red)
LED (internal status)
Reset button
Offset correction
Shielding

Programmable display screen **Modbus Tyr 3**

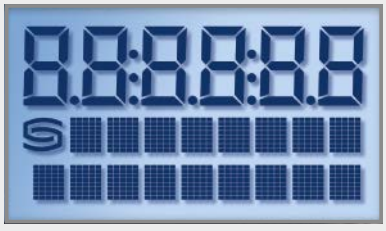

NEW

THERMASGARD® ALTM 2 - Modbus - T3

Surface contact temperature / tube contact temperature measuring transducers, incl. strap, with detached sensor head, calibratable, with Modbus connection

Dimensional drawing **ALTM 2 - Modbus - T3**

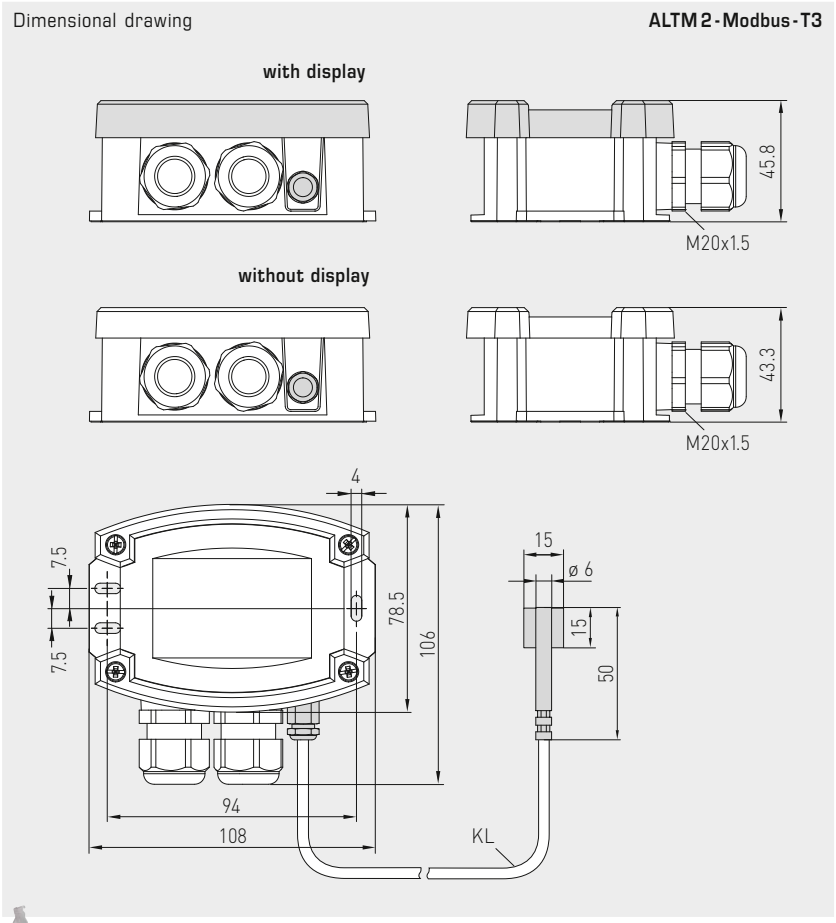

ALTM 2 - Modbus - T3
with display
(with detached sensor head)







High-performance encapsulation against vibration, mechanical stress and humidity

PS-PROTECTION
PERFECT SENSOR PROTECTION

THERMASGARD® ALTM 2 - Modbus - T3 Surface contact temperature / tube contact temperature measuring transducers

Type / WG01	Sensor	Output	Type	Display	Item No.
ALTM 2 - Modbus - T3					
ALTM2-MODBUS-T3	Pt1000	Modbus	Remote sensor		1101-62B6-0210-000
ALTM2-MODBUS-T3 LCD	Pt1000	Modbus	Remote sensor	■	1101-62B6-4210-000
Extra charge:	Protection type **IP68** (sensor sleeve watertight compound-filled) per running metre of connecting lead (**silicone / PTFE / glass fibre**)				on request

ACCESSORIES		
KA-2	**Modbus communication adapter** with USB/RS485 interface for system connection or/and as an active bus termination resistance	on request
WLP-1	**Heat-conductive paste**, silicone-free	7100-0060-1000-000
	For further information, see last chapter Accessories!	

THERMASGARD® RPTM 1 - Modbus - T3

**Pendulum room temperature measuring transducer,
(with stainless steel sleeve), calibratable,
with Modbus connection**

NEW

S+S REGELTECHNIK

Calibratable resistance thermometer with stainless steel sleeve **THERM**ASGARD® **RPTM 1 - Modbus - T3** with Modbus connection, enclosure made from impact-resistant plastic with quick-locking screws, with /without optional display for displaying actual temperature.

The room pendulum sensor is specifically designed for temperature detection in larger rooms or halls. Due to the measuring method employed by this room pendulum sensor in combination with its positioning in the room, an excellent measuring result that is representative of the room is achieved as ambient air of the room is circulating evenly around the sensor. The temperature transmitters are factory-calibrated. Adjustment / fine adjustment by the user is possible (zero point offset is adjustable).

RPTM1 - Modbus - T3



TECHNICAL DATA

Voltage supply:	24 V AC (± 20 %) and 15...36 V DC
Power consumption:	< 2 W / 24 V DC; < 3.5 VA / 24 V AC
Sensor:	Pt1000, DIN EN 60751, class B
Sensor protection:	**plastic** sinter filter, Ø 16 mm, L = 35 mm, exchangeable (optional **metal** sinter filter, Ø 16 mm, L = 32 mm)
Measuring range:	–50...+150 °C
Temperature deviation:	typically ± 0.2 K at +25 °C
Zero point offset:	± 10 °C
Ambient temperature:	Measuring transducer –30...+70 °C
Medium:	clean air and non-aggressive, non-combustible gases
Error detection:	sensor breakage, sensor short circuit
Bus protocol:	Modbus (RTU mode), address range 0...**247** selectable
Signal filtering:	0.3 s / 1 s / 10 s
Enclosure:	plastic, UV-stabilised, material polyamide, 30 % glass-globe reinforced, with quick-locking screws (slotted / Phillips head combination), colour traffic white (similar to RAL 9016), enclosure cover for display is transparent!
Enclosure dimensions:	108 x 78.5 x 43.3 mm (Tyr 3 without display) 108 x 78.5 x 45.8 mm (Tyr 3 with display)
Cable gland:	2x M 20 x 1.5; with strain relief, exchangeable, inner diameter 8 - 13 mm
Connection cable:	PVC, H03VV-F, 2 x 0.5 mm², cable length (KL) = approx. 1.5 m (other lengths optional)
Protective tube:	stainless steel **V2A** (1.4301), Ø = 16 mm, NL = 142 mm
Electrical connection:	0.2 - 1.5 mm², using push-in terminals
Permissible air humidity:	< 95 % r. H., non-precipitating air
Protection class:	III (according to EN 60 730)
Protection type:	IP 65 (according to EN 60 529)
Standards:	CE conformity, electromagnetic compatibility according to EN 61326, according to EMC Directive 2014 / 30 / EU
Optional:	**Display with illumination,** three-line, programmable, cutout approx. 51 x 29 mm (W x H), for displaying the actual temperature or an individually programmable display value (The Modbus interface allows the display to be individually configured in the 7-segment area and in the dot-matrix area.)
ACCESSORIES	see table

Schematic diagram **Modbus Tyr 3**

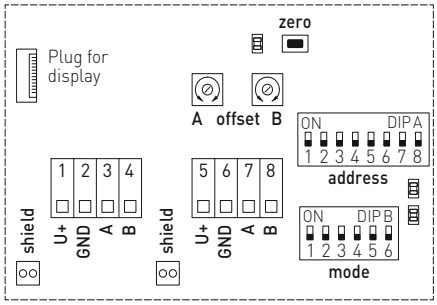

Programmable display screen **Modbus Tyr 3**

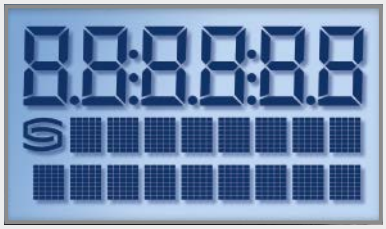

Pendulum room temperature measuring transducer, (with stainless steel sleeve), calibratable, with Modbus connection

Dimensional drawing **RPTM1-Modbus-T3**

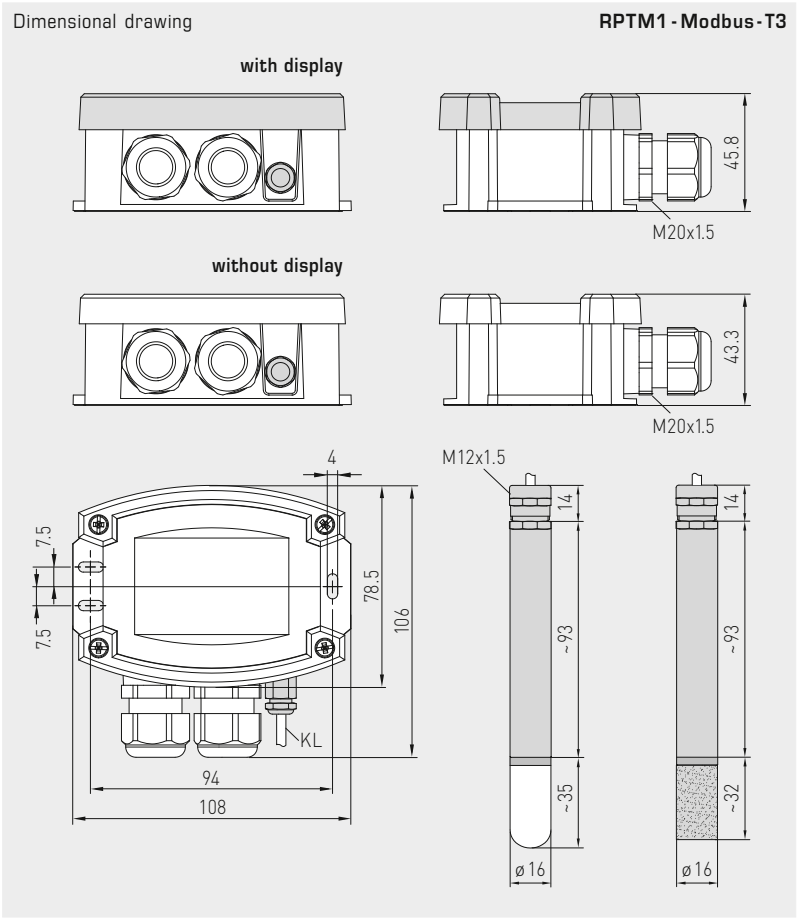

RPTM1-Modbus-T3
with display



MF-16-K
Mounting flange, plastic (optional)







SF-K
with plastic sinter filter (standard)



SF-M
with metal sinter filter (optional)



THERMASGARD® RPTM 1-Modbus-T3 Pendulum room temperature measuring transducer (with stainless steel sleeve)					
Type / WG01	**Sensor**	**Output**	**Type**	**Display**	**Item No.**
RPTM 1-Modbus-T3					
RPTM1-MODBUS-T3	Pt1000	Modbus	Remote sensor		1101-6286-0210-000
RPTM1-MODBUS-T3 LCD	Pt1000	Modbus	Remote sensor	■	1101-6286-4210-000
Extra charge:	per running metre of connecting lead (**PVC**)				on request

ACCESSORIES		
KA-2	**Modbus communication adapter** with USB/RS485 interface for system connection or/and as an active bus termination resistance	on request
SF-M	**Metal** sinter filter, Ø 16 mm, L = 32 mm, exchangeable stainless steel **V4A** (1.4404)	7000-0050-2200-100
MF-16-K	**Mounting flange** plastic (optional)	7100-0030-0000-000
	For further information, see last chapter Accessories!	

THERMASGARD® RPTM 2 - Modbus - T3

**Pendulum room temperature measuring transducer,
(with globe), calibratable,
with Modbus connection**

NEW

S+S REGELTECHNIK

Calibratable resistance thermometer with globe **THERM**ASGARD® **RPTM 2 - Modbus - T3** with Modbus connection, enclosure made from impact-resistant plastic with quick-locking screws, with /without optional display for displaying actual temperature.

The room pendulum sensor is specifically designed for temperature detection in larger rooms or halls, for example, as a dark radiation sensor. Due to the measuring method employed by this room pendulum sensor in combination with its positioning in the room, an excellent measuring result that is representative of the room is achieved. The globe thermometer determines the effective portion of active radiation or the effective radiant heat at the measured location. The globe temperature is determined to take heat radiation into consideration and to estimate the degree of thermal comfort (operative room temperature). The operative room temperature describes the coaction of heat radiation and heat convection (the ratio of globe temperature/ air temperature is approx. 70 % to 30 %). The sensors are factory-calibrated. Adjustment / fine adjustment by the user is possible (zero point offset is adjustable).

TECHNICAL DATA

Voltage supply:	24 V AC (± 20 %) and 15...36 V DC
Power consumption:	< 2 W / 24 V DC; < 3.5 VA / 24 V AC
Sensor:	Pt1000, DIN EN 60751, class B
Measuring range:	–50...+150 °C **T_{min} –50 °C, T_{max} + 80 °C**
Temperature deviation:	typically ± 0.2 K at +25 °C
Zero point offset:	± 10 °C
Ambient temperature:	Measuring transducer –30...+70 °C
Medium:	clean air and non-aggressive, non-combustible gases
Error detection:	sensor breakage, sensor short circuit
Bus protocol:	Modbus (RTU mode), address range 0...**247** selectable
Signal filtering:	0.3 s / 1 s / 10 s
Enclosure:	plastic, UV-stabilised, material polyamide, 30 % glass-globe reinforced, with quick-locking screws (slotted / Phillips head combination), colour traffic white (similar to RAL 9016), enclosure cover for display is transparent!
Enclosure dimensions:	108 x 78.5 x 43.3 mm (Tyr 3 without display) 108 x 78.5 x 45.8 mm (Tyr 3 with display)
Cable gland:	2x M 20 x 1.5; with strain relief, exchangeable, inner diameter 8 - 13 mm
Connection cable:	PVC, H03VV-F, 2 x 0.5 mm², cable length (KL) = approx. 1.5 m (other lengths optional)
Globe:	plastic, colour black, Ø = 50 mm
Electrical connection:	0.2 - 1.5 mm², using push-in terminals
Permissible air humidity:	< 95 % r. H., non-precipitating air
Protection class:	III (according to EN 60 730)
Protection type:	IP 65 (according to EN 60 529)
Standards:	CE conformity, electromagnetic compatibility according to EN 61326, according to EMC Directive 2014 / 30 / EU
Optional:	**Display with illumination,** three-line, programmable, cutout approx. 51 x 29 mm (W x H), for displaying the actual temperature or an individually programmable display value (The Modbus interface allows the display to be individually configured in the 7-segment area and in the dot-matrix area.)
ACCESSORIES	see table

RPTM 2 - Modbus - T3



Schematic diagram **Modbus Tyr 3**

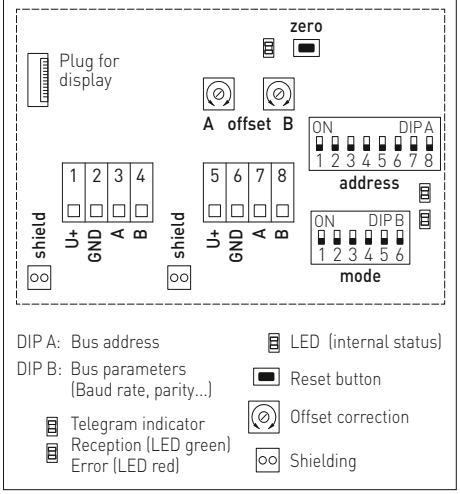

Programmable display screen **Modbus Tyr 3**

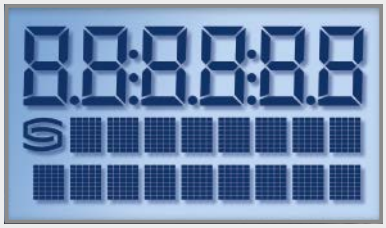

Pendulum room temperature measuring transducer, (with globe), calibratable, with Modbus connection

Dimensional drawing **RPTM 2 - Modbus - T3**

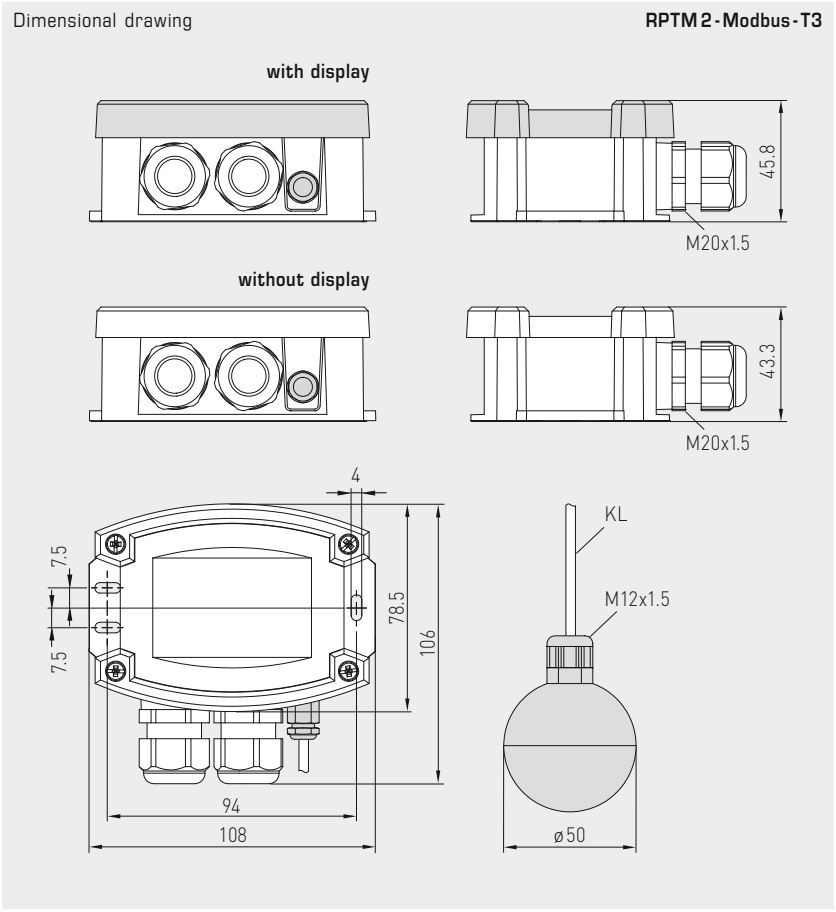

RPTM 2 - Modbus - T3
with display







THERMASGARD® RPTM 2 - Modbus - T3 Pendulum room temperature measuring transducer (with globe)					
Type / WG01	**Sensor**	**Output**	**Type**	**Display**	**Item No.**
RPTM 2 - Modbus - T3					
RPTM2-MODBUS-T3	Pt1000	Modbus	Remote sensor		1101-6296-0210-000
RPTM2-MODBUS-T3 LCD	Pt1000	Modbus	Remote sensor	■	1101-6296-4210-000
Extra charge:	per running metre of connecting lead (**PVC**)				on request

ACCESSORIES		
KA-2	**Modbus communication adapter** with USB/RS485 interface for system connection or / and as an active bus termination resistance	on request
	For further information, see last chapter Accessories!	

HYGRASGARD® RFTF-Modbus

Room humidity and temperature sensor (± 2.0 %), on-wall, for temperature, relative / absolute humidity, dew point, mixture ratio, enthalpy, calibratable, with Modbus connection

S+S REGELTECHNIK

The calibratable room sensor **HYGR**ASGARD® **RFTF-Modbus** with Modbus connection, with/without optional display in an elegant enclosure (Baldur 2) measures the relative humidity and temperature of the room air. These measurands are used to internally calculate various parameters. The Modbus can be used to retrieve the following parameters: relative humidity [% r. H.], absolute humidity [g/m³], mixture ratio [g/kg], dew point temperature [°C], enthalpy [kJ/kg] (ignoring atmospheric air pressure) and room temperature [°C].

RFTF-Modbus
Standard



Display
Standard

RFTF-Modbus
Display



TECHNICAL DATA

Power supply:	24 V AC (± 20 %) and 15…36 V DC
Power consumption:	< 1 VA / 24 V DC, < 2.2 VA / 24 V AC
Sensor:	**Digital humidity sensor** **with integrated temperature sensor,** low hysteresis, high long-term stability
Data points:	Temperature, relative humidity, absolute humidity, dew point, mixture ratio, enthalpy and setpoint potentiometer, rotary switch and presence button
Measuring range:	0…100 % r.H. (humidity) 0…+ 50 °C (temperature)
Deviation, humidity:	typically **± 2.0** % (20…80 % r. H.) at +25 °C, otherwise ± 3.0 %
Temperature deviation:	typically ± 0.2 K at +25 °C
Zero point offset:	± 10 % r.H. (humidity) ± 10 °C (temperature) adjustable using potentiometer
Ambient temperature:	Storage –35…+85 °C; Operation 0…+50 °C
Medium:	clean air and other **non-aggressive**, non-combustible gases
Bus protocol:	Modbus (RTU mode), address range 0…**247** selectable
Signal filtering:	4 s / 32 s
Enclosure:	plastic, material ABS, colour pure white (similar to RAL 9010)
Dimensions:	98 x 98 x 33 mm (Baldur 2)
Installation:	wall mounting or on in-wall flush box, Ø 55 mm, base with 4 holes, for attachment to vertically or horizontally installed in-wall flush boxes for rear cable entry, with predetermined breaking point for cable entry from top /bottom in case of plain on-wall installation
Long-term stability:	± 1 % / year
Permissible air humidity:	< 95 % r. H., non-precipitating air
Protection class:	III (according to EN 60 730)
Protection type:	IP 30 (according to EN 60 529)
Standards:	CE conformity according to EMC Directive 2014 / 30 / EU, according to EN 61 326
Features:	**Display with illumination,** two-line, programmable, cutout approx. 36 x 15 mm (W x H), to display actual humidity and temperature or a selectable parameter or an individually programmable display value
ACCESSORIES	see table

Schematic diagram **RFTF-Modbus**

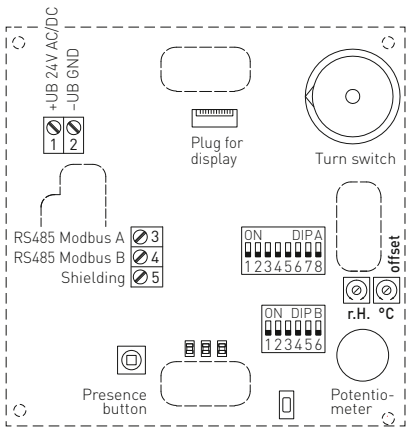

DIP A: Bus address
DIP B: Bus parameters (Baud rate, parity …)
Telegram indicator
Reception (LED green)
Error (LED red)
LED (internal status)
Offset correction temperature: ± 10°C
°C
Offset correction humidity: ± 10% r.H.
r.H.
Plug for display contact is on the right side

Room humidity and temperature sensor (± 2.0 %), on-wall, for temperature, relative / absolute humidity, dew point, mixture ratio, enthalpy, calibratable, with Modbus connection

Dimensional drawing — Enclosure **Baldur 2**

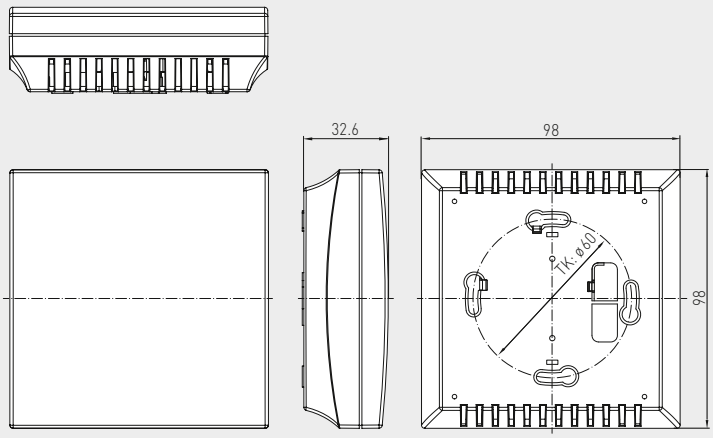

RFTF-Modbus
with display



Display
alternative output variables

RFTF-Modbus
Display



By default, the display alternates between the **actual temperature** and the **actual humidity** (relative humidity). For improved legibility, backlighting is provided.

The Modbus interface allows the display to be **individually** configured both in the 7-segment area and in the dot-matrix area.

The **Modbus configuration** can be used to program an alternative output variable instead of the standard display.
In this case, the first line displays the value and index while the second line displays the corresponding unit.
The index identifies the display type:

Index 1 = temperature in **°C**
Index 2 = setpoint potentiometer in %
Index 3 = dew point in **°C**
Index 4 = relative humidity in % **r.H.**
Index 5 = absolute humidity in **g/m³**
Index 6 = mixture ratio in **g/kg**
Index 7 = enthalpy in **kJ/kg**

HYGRASGARD® RFTF-Modbus Roomoperating humidity and temperature sensor

Type / WG01	Measuring Range / Readout Humidity (switchable)	Temperature	Output	Display	Item No.
RFTF-Modbus					
RFTF-MODBUS	0...100 % r. H. (default) 0...80 g / kg (MR) 0...80 g / m³ (A.H.) 0...85 kJ / kg (ENT.) –20...+80 °C (DP)	0...+50 °C	Modbus		1201-42B6-6000-000
RFTF-MODBUS LCD	0...100 % r. H. (default) 0...80 g / kg (MR) 0...80 g / m³ (A.H.) 0...85 kJ / kg (ENT.) –20...+80 °C (DP)	0...+50 °C	Modbus	■	1201-42B6-7000-000
ACCESSORIES					
KA-2	**Modbus communication adapter** with USB/RS485 interface for system connection or/and as an active bus termination resistance				on request

HYGRASGARD® FSFTM - Modbus

NEW

S+S REGELTECHNIK

Room, humidity and temperature sensor or measuring transducer for temperature, relative / absolute humidity, dew point, mixture ratio, enthalpy, in-wall in the panel switch programme, with Modbus connection

The room sensor and measuring transducer **HYGR**ASGARD® **FSFTM - Modbus** in the in-wall enclosure, optionally with potentiometer, is used to measure the relative humidity and temperature of the air, and for setpoint adjustment. The following parameters are calculated internally from the measured values: relative humidity [% r. H.], absolute humidity [g / m³], mixture ratio [g / kg], dew point temperature [°C], enthalpy [kJ / kg] (ignoring atmospheric air pressure) and room temperature [°C]. The parameters are queried via the Modbus interface.

A digital, long-term stable sensor is used for humidity and temperature measurement. Relative humidity [% r. H.] is the quotient of water vapour partial pressure divided by the saturation vapour pressure at the respective gas temperature.

The in-wall sensor is mounted in high-quality panel switch programmes, ideally of the brands Gira, Berker, Merten, Jung, Siemens or Busch-Jaeger (using in-wall adapters, no setpoint adjustment possible) either individually or in combination with light switches, socket outlets, etc.

It is used in non-aggressive, dust-free environments, in refrigeration, air conditioning and clean room technology, and in interior rooms, such as living rooms, offices, hotels, etc.

Mounting diagram **in-wall**

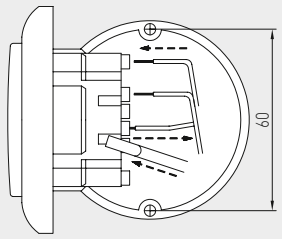

TECHNICAL DATA

Power supply:	24 V AC / DC (± 10 %)
Power consumption:	< 1.1 W / 24 V DC; < 2.2 VA / 24 V AC
Data points:	temperature [°C], relative humidity [% r. H.] absolute humidity [g / m³], dew point [°C], mixing ratio [g / kg], enthalpy [kJ / kg] and setpoint potentiometer (no setpoint adjustment possible with Busch-Jaeger)
Bus protocol:	Modbus (RTU mode), address range 0…**247** selectable
Signal filtering:	4 s / 32 s
HUMIDITY	
Sensor:	**digital humidity sensor,** **with integrated temperature sensor,** low hysteresis, high long-term stability
Long-term stability:	± 1 % per year
Measuring range, humidity::	0…100 % r. H.
Operating range, humidity:	0…95 % r. H. (non-precipitating air)
Deviation, humidity:	typically ± 3.0 % (20…80 % r. H.) at +25 °C, otherwise ± 5.0 %
TEMPERATURE	
Measuring range:	0…+50 °C
Deviation, temperature:	typically ± 0.8 K at +25 °C
Mounting:	in-wall flush box Ø 55 mm
Electrical connection:	0.14 - 1.5 mm², via screw terminals
Ambient temperature:	Storage –35…+85 °C; Operation 0…+50 °C
Permitted humidity:	max. 90 % r.H., non-precipitating air
Medium:	clean air and other non-aggressive, non-combustible gases
Protection class:	III (according to EN 60 730)
Protection type:	IP 20 (according to 60 529)
Standards:	CE-conformity, electromagnetic compatibility according to EN 61 326, EMC Directive 2014 / 30 / EU
SWITCH PROGRAMME	
Manufacturer:	GIRA System 55 (other switch programmes, manufacturers, colours as well as prices available upon request)
Enclosure:	plastic, the standard colour is pure glossy white (similar to RAL 9010) (other colours are available upon request with colour variants depending on the respective light switch programme)

Connection diagram **FSFTM - Modbus**

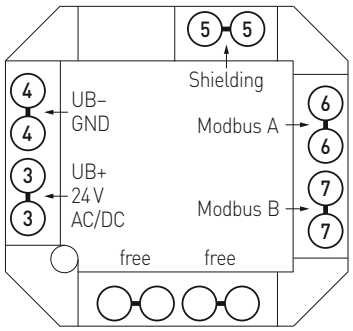

NEW

HYGRASGARD® FSFTM - Modbus

Room, humidity and temperature sensor or measuring transducer for temperature, relative / absolute humidity, dew point, mixture ratio, enthalpy, in-wall in the panel switch programme, with Modbus connection

Dimensional drawing **FSFTM - Modbus**

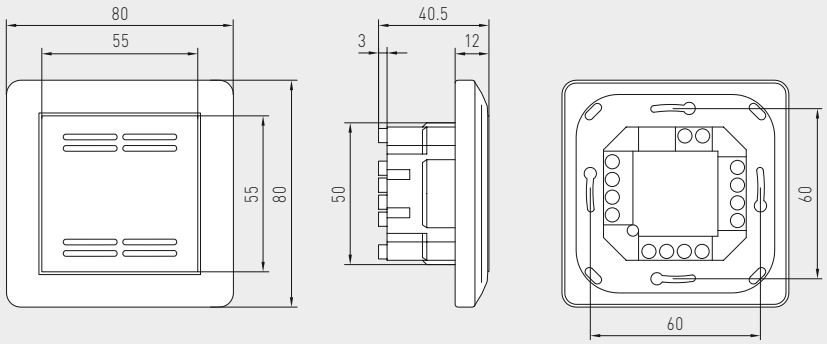

FSFTM - Modbus
Standard



Dimensional drawing **FSFTM - Modbus - P**

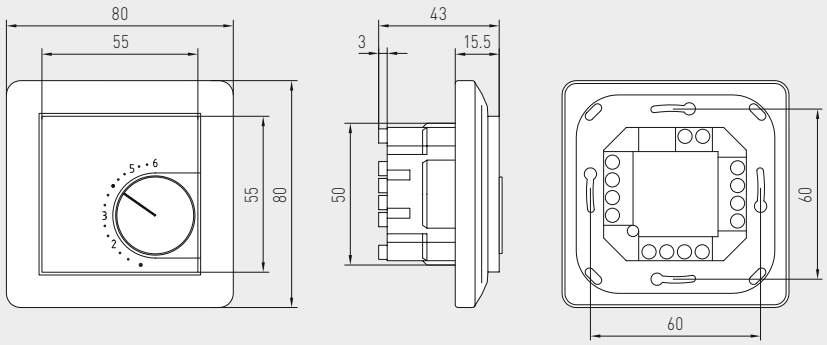

FSFTM - Modbus - P
with potentiometer



HYGRASGARD® FSFTM - Modbus Room temperature and humidity sensor, in-wall

Type / WG02	Measuring Range Humidity (base value)		Temperature	Control element	Output	Item No.
FSFTM - Modbus						
FSFTM-MODBUS	0...100 % r. H. 0...80 g / kg 0...80 g / m³ 0...85 kJ / kg –20...+80 °C	(default) (MV) (a.H.) (ENT.) (TP)	0...+50 °C	–	Modbus	1201-9226-1000-162
FSFTM-MODBUS P	0...100 % r. H. 0...80 g / kg 0...80 g / m³ 0...85 kJ / kg –20...+80 °C	(default) (MV) (a.H.) (ENT.) (TP)	0...+50 °C	Potentiometer	Modbus	1201-9226-1400-282
Data points:	relative humidity [% r. H.], absolute humidity [g / m³], mixture ratio [g / kg], dew point temperature [°C], enthalpy [kJ / kg] (ignoring atmospheric air pressure), temperature [°C] and setpoint potentiometer					

HYGRASGARD® AFTF - Modbus - T3

On-wall-humidity- and temperature sensors (± 2.0 %), for mixture ratio, relative / absolute humidity, dew point, enthalpy and temperature, calibratable, with Modbus connection

NEW

S+S REGELTECHNIK

Calibratable outdoor humidity- and temperature sensor **HYGR**ASGARD® **AFTF - Modbus - T3** with Modbus connection, enclosure made from impact-resistant plastic with quick-locking screws, **with / without optional display.**

The universal on-wall sensor is used to determine various characteristic variables in humidity measurement. It is used to measure the relative humidity and the temperature of the surrounding air. These measurands are used to calculate various parameters internally. The Modbus can be used to retrieve the following parameters: relative humidity [% r. H.], absolute humidity [g / m³], mixture ratio [g / kg], dew point temperature [°C], enthalpy [kJ / kg] (ignoring atmospheric air pressure) and ambient temperature [°C].

It is used in non-aggressive dust-free environments in refrigeration, air conditioning, ventilation and clean room technology, hotels, technical rooms, meeting rooms and convention centres. The measuring transducers are designed for exact detection of temperature and humidity. A digital long-term stable sensor is used as measuring element for humidity and temperature measurement. Fine adjustment by the user is possible.

AFTF - Modbus - T3



TECHNICAL DATA

Voltage supply:	24 V AC (± 20 %) and 15...36 V DC
Power consumption:	< 2 W / 24 V DC; < 3.5 VA / 24 V AC
Data points:	Temperature [°C], relative humidity [% r.H.], dew point [°C], absolute humidity [g / m³], mixture ratio [g / kg], enthalpy [kJ / kg]
Sensors:	**digital humidity sensor with integrated temperature sensor,** low hysteresis, high long-term stability
Sensor protection:	**plastic** sinter filter, Ø 14 mm, L = 25 mm, exchangeable
Measuring range:	0...100 % r.H. (humidity) – 35...+80 °C (temperature)
Deviation, humidity:	typically **± 2.0** % (20...80 % r. H.) at +25 °C, otherwise ± 3.0 %
Temperature deviation:	typically ± 0.4 K at +25 °C
Zero point offset:	± 10 % r.H. (humidity) ± 10 °C (temperature)
Ambient temperature:	– 30...+70 °C
Medium:	clean air and non-aggressive, non-combustible gases
Bus protocol:	Modbus (RTU mode), address range 0...**247** selectable
Enclosure:	plastic, UV-stabilised, material polyamide, 30 % glass-globe reinforced, with quick-locking screws (slotted / Phillips head combination), colour traffic white (similar to RAL 9016), enclosure cover for display is transparent!
Enclosure dimensions:	108 x 78.5 x 43.3 mm (Tyr 3 without display) 108 x 78.5 x 45.8 mm (Tyr 3 with display)
Cable gland:	2x M 20 x 1.5; with strain relief, exchangeable, inner diameter 8 - 13 mm
Process connection:	by screws
Electrical connection:	0.2 - 1.5 mm², using push-in terminals
Long-term stability:	± 1 % / year
Permissible air humidity:	< 95 % r. H., non-precipitating air
Protection class:	III (according to EN 60 730)
Protection type:	IP 65 (according to EN 60 529)
Standards:	CE conformity, electromagnetic compatibility according to EN 61326, according to EMC Directive 2014 / 30 / EU
Optional:	**Display with illumination**, three-line, programmable, cutout approx. 51 x 29 mm (W x H), for displaying the actual humidity and actual temperature (cyclic) or a selectable parameter (static) or an individually programmable display value (The Modbus interface allows the display to be individually configured in the 7-segment area and in the dot-matrix area.)
ACCESSORIES	see table

Schematic diagram **Modbus Tyr 3**

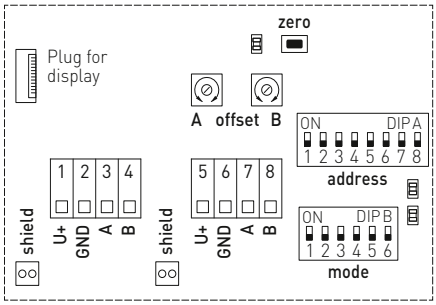

DIP A: Bus address
DIP B: Bus parameters (Baud rate, parity...)
Telegram indicator
Reception (LED green)
Error (LED red)
LED (internal status)
Reset button
Offset correction
Shielding

Programmable display screen **Modbus Tyr 3**

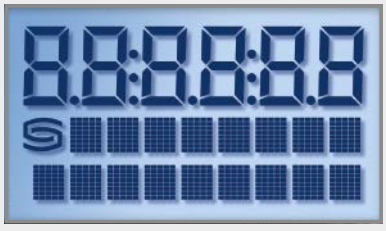

NEW

HYGRASGARD® AFTF-Modbus-T3

On-wall-humidity- and temperature sensors (± 2.0 %), for mixture ratio, relative / absolute humidity, dew point, enthalpy and temperature, calibratable, with Modbus connection

Dimensional drawing **AFTF-Modbus-T3**

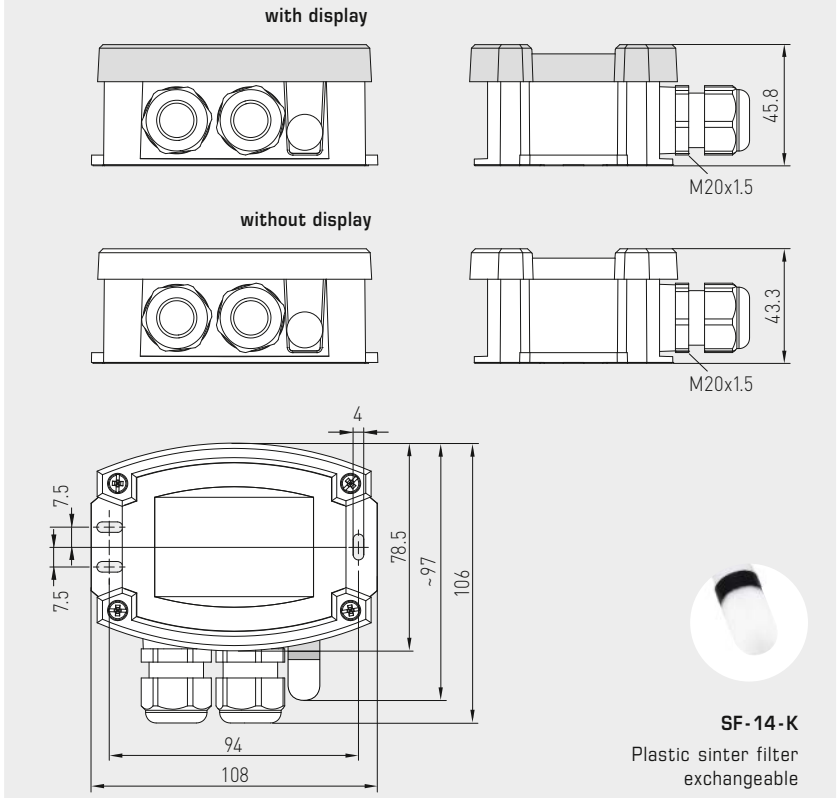

SF-14-K
Plastic sinter filter exchangeable

AFTF-Modbus-T3
with display



WS-04
Weather and sun protection hood (optional)







HYGRASGARD® AFTF-Modbus-T3 On-wall-humidity- and temperature sensors (± 2.0 %)

Type / WG01	Measuring Range / Readout Humidity (switchable)	Temperature	Output	Display	Item No.
AFTF-Modbus-T3					
AFTF-MODBUS-T3	0 ...100 % r. H. (default) 0 ... 80 g / kg (MR) 0 ... 80 g / m³ (A.H.) 0 ... 85 kJ / kg (ENT.) –20...+80 °C (DP)	–35...+80 °C	Modbus		1201-12C6-1000-000
AFTF-MODBUS-T3 LCD	(5 x as above)	(1 x as above)	Modbus	■	1201-12C6-1400-000
ACCESSORIES					
KA-2	**Modbus communication adapter** with USB/RS485 interface for system connection or/and as an active bus termination resistance				on request
WS-01	**Sun and ball-impact protection hood,** 184 x 180 x 80 mm, stainless steel **V2A** (1.4301)				7100-0040-2000-000
WS-04	**Weather and sun protection hood,** 130 x 180 x 135 mm, stainless steel **V2A** (1.4301)				7100-0040-7000-000
	For further information, see last chapter Accessories!				

HYGRASGARD® KFTF-Modbus-T3
HYGRASGARD® KFTF-20-Modbus-T3

Duct humidity- and temperature sensors (± 1.8 % / ± 2.0 %), incl. mounting flange, for mixture ratio, relative / absolute humidity, dew point, enthalpy and temperature, calibratable, with Modbus connection

NEW

S+S REGELTECHNIK

Calibratable duct humidity- and temperature sensor **HYGR**ASGARD® **KFTF-Modbus-T3** (± 2.0 %) or **KFTF-20-Modbus-T3** (± 1.8 %), with plastic sinter filter (optional metal sinter filter), with Modbus connection, enclosure made from impact-resistant plastic with quick-locking screws, **with / without optional display**.

The universal duct sensor is used to determine various characteristic variables in humidity measurement. It is used to measure the relative humidity and the temperature of the surrounding air. These measurands are used to calculate various parameters internally. The Modbus can be used to retrieve the following parameters: relative humidity [% r.h.], absolute humidity [g / m³], mixture ratio [g / kg], dew point temperature [°C], enthalpy [kJ / kg] (ignoring atmospheric air pressure) and ambient temperature [°C].

It is used in non-aggressive dust-free environments in refrigeration, air conditioning, ventilation and clean room technology, hotels, technical rooms, meeting rooms and convention centres. The measuring transducers are designed for exact detection of temperature and humidity. A digital long-term stable sensor is used as measuring element for humidity and temperature measurement. Fine adjustment by the user is possible. The sensor is suitable for ceiling and duct installation, or for integration into equipment.

KFTF-Modbus-T3 (± 2,0 %)
KFTF-20-Modbus-T3 (± 1,8 %)





SF-K
Plastic sinter filter (standard)



SF-M
Metal sinter filter (optional)

stainless steel protective tube (optional on request)

TECHNICAL DATA

Voltage supply:	24 V AC (± 20 %) and 15...36 V DC
Power consumption:	< 2 W / 24 V DC; < 3.5 VA / 24 V AC
Data points:	Temperature [°C], relative humidity [% r.h.], dew point [°C], absolute humidity [g / m³], mixture ratio [g / kg], enthalpy [kJ / kg]
Sensor:	**digital humidity sensor with integrated temperature sensor,** low hysteresis, high long-term stability
Sensor protection:	**plastic** sinter filter, Ø 16 mm, L = 35 mm, exchangeable (optional **metal** sinter filter, Ø 16 mm, L = 32 mm)
Measuring range:	0...100 % r.H. (humidity) –35...+80 °C (temperature)
Deviation, humidity:	**KFTF-Modbus:** typically **± 2.0** % (20...80 % r. H.) at +25 °C, otherwise ± 3.0 % **KFTF-20-Modbus:** typically **± 1.8** % (10...90 % r. H.) at +25 °C, otherwise ± 2.0 %
Temperature deviation:	typically ± 0.2 K at +25 °C
Zero point offset:	± 10 % r.H. (humidity) ± 10 °C (temperature)
Ambient temperature:	–30...+70 °C
Medium:	clean air and non-aggressive, non-combustible gases
Bus protocol:	Modbus (RTU mode), address range 0...**247** selectable
Signal filtering:	4 s / 32 s
Enclosure:	plastic, UV-stabilised, material polyamide, 30 % glass-globe reinforced, with quick-locking screws (slotted / Phillips head combination), colour traffic white (similar to RAL 9016), enclosure cover for display is transparent!
Enclosure dimensions:	108 x 78.5 x 43.3 mm (Tyr 3 without display) 108 x 78.5 x 45.8 mm (Tyr 3 with display)
Cable gland:	2x M 20 x 1.5; with strain relief, exchangeable, inner diameter 8 - 13 mm
Protective tube:	**PLEUROFORM**™, material polyamide (PA6), with torsion protection, Ø 20 mm, NL = 235 mm, v_{max} = 30 m/s (air) (on request, optional **stainless steel V2A** (1.4301), Ø 16 mm)
Process connection:	by mounting flange, plastic (included in the scope of delivery)
Long-term stability:	± 1 % / year
Electrical connection:	0.2 - 1.5 mm², using push-in terminals
Permissible air humidity:	< 95 % r. H., non-precipitating air
Protection class:	III (according to EN 60 730)
Protection type:	IP 65 (according to EN 60 529)
Standards:	CE conformity, electromagnetic compatibility according to EN 61326, according to EMC Directive 2014 / 30 / EU
Optional:	**Display with illumination**, three-line, programmable, cutout approx. 51 x 29 mm (W x H), for displaying the actual humidity and actual temperature (cyclic) or a selectable parameter (static) or an individually programmable display value (The Modbus interface allows the display to be individually configured in the 7-segment area and in the dot-matrix area.)
ACCESSORIES	see table
MFT-20-K	**Mounting flange**, plastic (included in the scope of delivery)

Schematic diagram **Modbus Tyr 3**

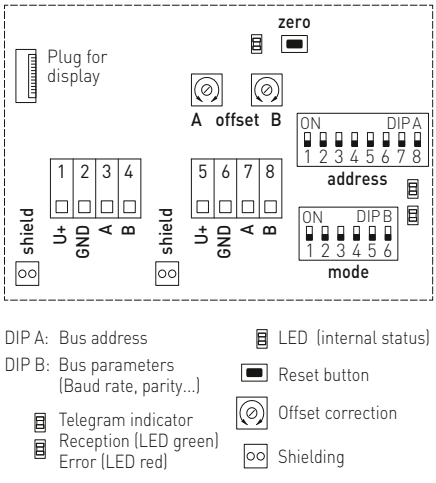

Programmable display screen **Modbus Tyr 3**

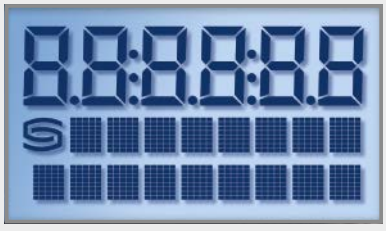

NEW

HYGRASGARD® KFTF-Modbus-T3
HYGRASGARD® KFTF-20-Modbus-T3

Duct humidity- and temperature sensors (± 1.8 % / ± 2.0 %), incl. mounting flange, for mixture ratio, relative / absolute humidity, dew point, enthalpy and temperature, calibratable, with Modbus connection

Dimensional drawing

KFTF-Modbus-T3
KFTF-20-Modbus-T3

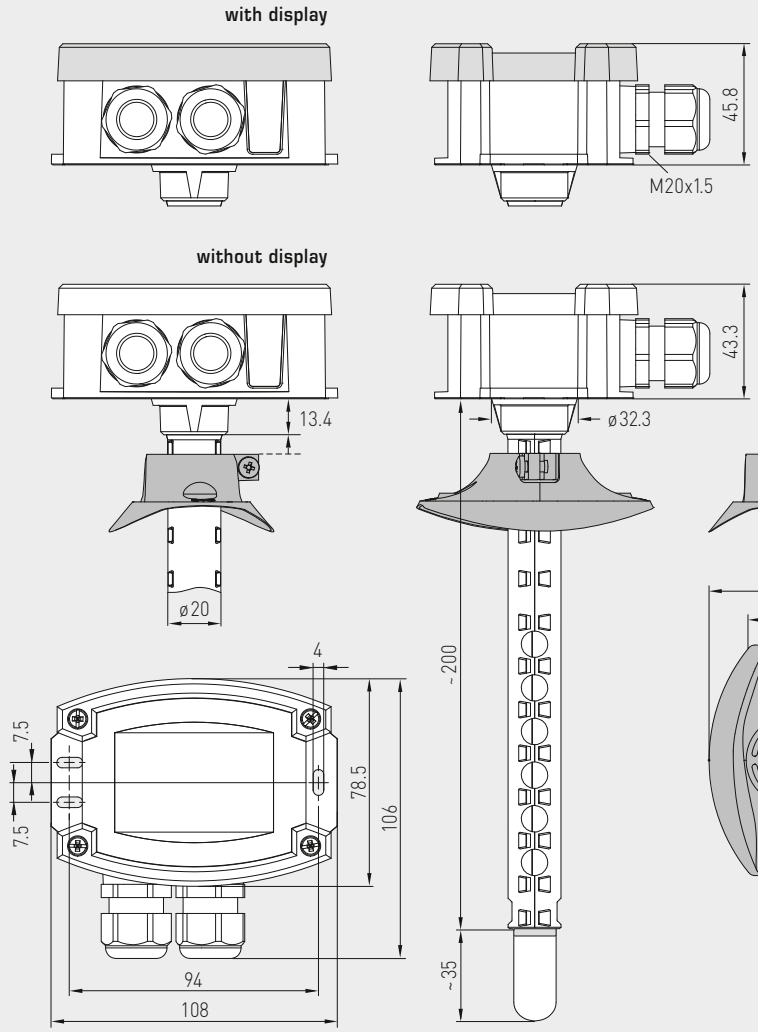

KFTF-Modbus-T3 (± 2,0 %)
KFTF-20-Modbus-T3 (± 1,8 %)
with display





MFT-20-K
Mounting flange, plastic

HYGRASGARD® KFTF-Modbus-T3 Duct humidity- and temperature sensors (± 2.0 %)
HYGRASGARD® KFTF-20-Modbus-T3 Duct humidity- and temperature sensors (± 1.8 %)

Type / WG01	Measuring Range / Readout Humidity (switchable)	Temperature	Output	Display	Item No.
KFTF-Modbus-T3					**(± 2,0 %)**
KFTF-MODBUS-T3	0 ... 100 % r. H. (default) 0 ... 80 g / kg (MR) 0 ... 80 g / m³ (A.H.) 0 ... 85 kJ / kg (ENT.) –20...+80 °C (DP)	–35...+80 °C	Modbus		1201-32C6-1000-029
KFTF-MODBUS-T3 LCD	(5 x as above)	(1 x as above)	Modbus	■	1201-32C6-1400-029
KFTF-20-Modbus-T3					**(± 1,8 %)**
KFTF-20-MODBUS-T3	(5 x as above)	(1 x as above)	Modbus		1201-32C6-1000-030
KFTF-20-MODBUS-T3 LCD	(5 x as above)	(1 x as above)	Modbus	■	1201-32C6-1400-030

ACCESSORIES		
KA-2	**Modbus communication adapter** with USB/RS485 interface for system connection or/and as an active bus termination resistance	on request
SF-M	**Metal** sinter filter, Ø 16 mm, L = 32 mm, exchangeable, stainless steel **V4A** (1.4404)	7000-0050-2200-100
	For further information, see last chapter Accessories!	

HYGRASGARD® RPFTF-Modbus-T3
HYGRASGARD® RPFTF-20-Modbus-T3

Pendulum room humidity and temperature sensors (± 1.8 % / ± 2.0 %), for mixture ratio, relative / absolute humidity, dew point, enthalpy and temperature, calibratable, with Modbus connection

NEW

S+S REGELTECHNIK

Calibratable pendulum room humidity and temperature sensor **HYGR**ASGARD® **RPFTF-Modbus-T3** (± 2,0 %) or **RPFTF-20-Modbus-T3** (± 1.8 %), with plastic sinter filter (optional metal sinter filter), with Modbus connection, enclosure made from impact-resistant plastic with quick-locking screws, **with / without optional display.**

The universal pendulum room sensor is used to determine various characteristic variables in humidity measurement. It is used to measure the relative humidity and the temperature of the surrounding air. These measurands are used to calculate various parameters internally. The Modbus can be used to retrieve the following parameters: relative humidity [% r. h.], absolute humidity [g / m³], mixture ratio [g / kg], dew point temperature [°C], enthalpy [kJ / kg] (ignoring atmospheric air pressure) and ambient temperature [°C].

It is used in non-aggressive dust-free environments in refrigeration, air conditioning, ventilation and clean room technology, hotels, technical rooms, meeting rooms and convention centres. The measuring transducers are designed for exact detection of temperature and humidity. A digital long-term stable sensor is used as measuring element for humidity and temperature measurement. Fine adjustment by the user is possible. The sensor is suitable for ceiling and duct installation, or for integration into equipment.

RPFTF-Modbus-T3 (± 2,0 %)
RPFTF-20-Modbus-T3 (± 1,8 %)



TECHNICAL DATA

Voltage supply:	24 V AC (± 20 %) and 15...36 V DC
Power consumption:	< 2 W / 24 V DC; < 3.5 VA / 24 V AC
Data points:	Temperature [°C], relative humidity [% r.h.], dew point [°C], absolute humidity [g / m³], mixture ratio [g / kg], enthalpy [kJ / kg]
Sensors:	**digital humidity sensor with integrated temperature sensor,** low hysteresis, high long-term stability
Sensor protection:	**plastic** sinter filter, Ø 16 mm, L = 35 mm, exchangeable (optional **metal** sinter filter, Ø 16 mm, L = 32 mm)
Measuring range:	0...100 % r.H. (humidity) – 35...+ 80 °C (temperature)
Deviation, humidity:	**RPFTF-Modbus:** typically **± 2.0** % (20...80 % r. h.) at +25 °C, otherwise ± 3.0 % **RPFTF-20-Modbus:** typically **± 1.8** % (10...90 % r. h.) at +25 °C, otherwise ± 2.0 %
Temperature deviation:	typically ± 0.2 K at +25 °C
Zero point offset:	± 10 % r.h. (humidity) ± 10 °C (temperature)
Ambient temperature:	– 30...+ 70 °C
Medium:	clean air and non-aggressive, non-combustible gases
Bus protocol:	Modbus (RTU mode), address range 0...**247** selectable
Signal filtering:	4 s / 32 s
Enclosure:	plastic, UV-stabilised, material polyamide, 30 % glass-globe reinforced, with quick-locking screws (slotted / Phillips head combination), colour traffic white (similar to RAL 9016), enclosure cover for display is transparent!
Enclosure dimensions:	108 x 78.5 x 43.3 mm (Tyr 3 without display) 108 x 78.5 x 45.8 mm (Tyr 3 with display)
Cable gland:	2x M 20 x 1.5; with strain relief, exchangeable, inner diameter 8 - 13 mm
Connection cable:	PVC, LiYY, 6 x 0.14 mm², cable length (KL) = approx. 2 m (other lengths optional)
Protective tube:	**stainless steel V2A** (1.4301), Ø 16 mm, NL = 142 mm
Electrical connection:	0.2 - 1.5 mm², using push-in terminals
Permissible air humidity:	< 95 % r. H., non-precipitating air
Protection class:	III (according to EN 60 730)
Protection type:	IP 65 (according to EN 60 529)
Standards:	CE conformity, electromagnetic compatibility according to EN 61326, according to EMC Directive 2014 / 30 / EU
Optional:	**Display with illumination**, three-line, programmable, cutout approx. 51 x 29 mm (W x H), for displaying the actual humidity and actual temperature (cyclic) or a selectable parameter (static) or an individually programmable display value (The Modbus interface allows the display to be individually configured in the 7-segment area and in the dot-matrix area.)
ACCESSORIES	see table

Schematic diagram **Modbus Tyr 3**

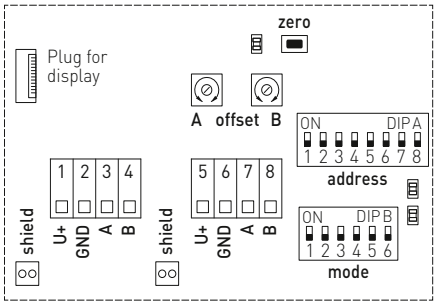

DIP A: Bus address
DIP B: Bus parameters (Baud rate, parity...)
Telegram indicator
Reception (LED green)
Error (LED red)
LED (internal status)
Reset button
Offset correction
Shielding

Programmable display screen **Modbus Tyr 3**

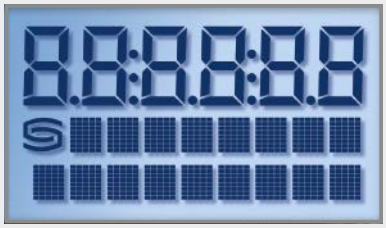

NEW

HYGRASGARD® RPFTF-Modbus-T3
HYGRASGARD® RPFTF-20-Modbus-T3

Pendulum room humidity and temperature sensors (± 1.8 % / ± 2.0 %), for mixture ratio, relative / absolute humidity, dew point, enthalpy and temperature, calibratable, with Modbus connection

Dimensional drawing

RPFTF-Modbus-T3
RPFTF-20-Modbus-T3

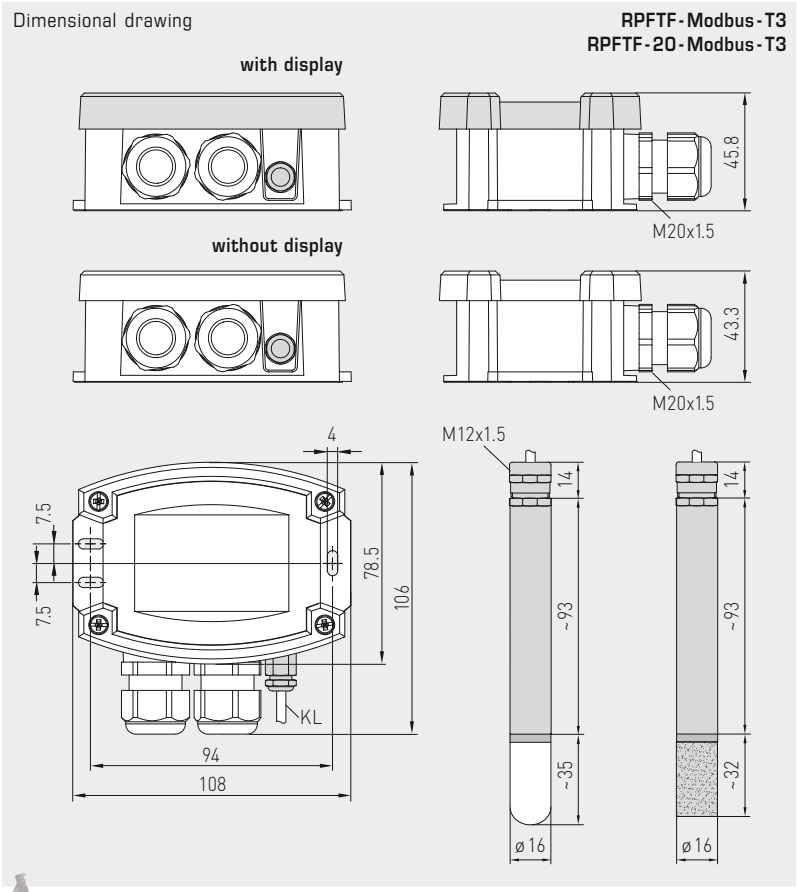

RPFTF-Modbus-T3 (± 2,0 %)
RPFTF-20-Modbus-T3 (± 1,8 %)
with display



MF-16-K
Mounting flange, plastic (optional)







SF-K
plastic sinter filter (standard)



SF-M
metal sinter filter (optional)



HYGRASGARD® RPFTF-Modbus-T3	Pendulum room humidity and temperature sensors (± 2.0 %)
HYGRASGARD® RPFTF-20-Modbus-T3	Pendulum room humidity and temperature sensors (± 1.8 %)

Type / WG01	Measuring Range / Readout Humidity (switchable)	Temperature	Output	Display	Item No.
RPFTF-Modbus-T3					**(± 2,0 %)**
RPFTF-MODBUS-T3	0 ... 100 % r. H. (default) 0 ... 80 g / kg (MR) 0 ... 80 g / m³ (A.H.) 0 ... 85 kJ / kg (ENT.) –20...+80 °C (DP)	–35...+80 °C	Modbus		1201-6246-1000-000
RPFTF-MODBUS-T3 LCD	(5 x as above)	(1 x as above)	Modbus	■	1201-6246-1400-000
RPFTF-20-Modbus-T3					**(± 1,8 %)**
RPFTF-20-MODBUS-T3	(5 x as above)	(1 x as above)	Modbus		1201-6246-1000-001
RPFTF-20-MODBUS-T3 LCD	(5 x as above)	(1 x as above)	Modbus	■	1201-6246-1400-001
Extra charge:	per running metre of connecting lead (**PVC**)				on request
ACCESSORIES					
KA-2	**Modbus communication adapter** with USB/RS485 interface				on request
SF-M	**Metal** sinter filter, Ø 16 mm, L = 32 mm, exchangeable, stainless steel **V4A** (1.4404)				7000-0050-2200-100
MF-16-K	**Mounting flange** made of plastic (optional)				7100-0030-0000-000
	For further information, see last chapter Accessories!				

HYGRASGARD® VFTF-Modbus-T3

Showcase humidity and temperature sensor (± 2.0 %), for mixture ratio, relative / absolute humidity, dew point, enthalpy and temperature, calibratable, with Modbus connection

NEW

S+S REGELTECHNIK

Calibratable showcase humidity and temperature sensor **HYGR**ASGARD® **VFTF-Modbus-T3** with Modbus connection, enclosure made from impact-resistant plastic with quick-locking screws, with / without optional display.

The universal showcase sensor is used to detect various parameters in humidity measurement. The relative humidity and temperature of the ambient air are measured. These measurands are used to calculate various parameters internally. The Modbus can be used to retrieve the following parameters: relative humidity [% r. H.], absolute humidity [g / m³], mixture ratio [g / kg], dew point temperature [°C], enthalpy [kJ / kg] (ignoring atmospheric air pressure) and ambient temperature [°C].

The measuring transducers are designed for exact detection of temperature and humidity. A digital, long-term stable sensor is used as a measuring element for humidity and temperature measurement. Fine adjustment by the user is possible.

The showcase sensor is used in non-aggressive, dust-free environments and is specifically designed for installation in ceilings, walls, inside showcases or display cabinets in museums, galleries, cinemas or lecture halls or laboratories. The measuring element is contained inside a stainless steel probe and its low height (approx. 2.5 mm) makes it barely noticeable.

VFTF-Modbus-T3



TECHNICAL DATA

Voltage supply:	24 V AC (± 20 %) and 15…36 V DC
Power consumption:	< 2 W / 24 V DC; < 3.5 VA / 24 V AC
Sensor:	**digital humidity sensor with integrated temperature sensor,** low hysteresis, high long-term stability
Measuring Range:	0…100 % r.H. (humidity) – 35…+ 80 °C (temperature)
Deviation in humidity:	typically **± 2.0** % (20…80 % r. H.) at +25 °C, otherwise ± 3.0 %
Deviation in temperature:	typically ± 0.2 K at +25 °C
Zero point offset:	± 10 % r.H. (humidity) ± 10 °C (temperature)
Ambient temperature:	– 30…+ 70 °C
Medium:	clean air and non-aggressive, non-combustible gases
Bus protocol:	Modbus (RTU mode), address range 0…**247** selectable
Signal filtering:	4 s / 32 s
Enclosure:	plastic, UV-stabilised, material polyamide, 30 % glass-globe reinforced, with quick-locking screws (slotted / Phillips head combination), colour traffic white (similar to RAL 9016), enclosure cover for display is transparent!
Enclosure dimensions:	108 x 78.5 x 43.3 mm (Tyr 3 without display) 108 x 78.5 x 45.8 mm (Tyr 3 with display)
Cable gland:	2x M 20 x 1.5; with strain relief, exchangeable, inner diameter 8 - 13 mm
Connection cable:	PVC, LiYY, 4 x 0.14 mm², cable length (KL) = approx. 2 m (other lengths optional)
Sensor protection:	**probe** made of stainless steel, **V4A** (1.4571), **pluggable**; sensor head Ø = 17 mm, H = approx. 2.5 mm; protective sleeve Ø = 10 mm, NL = approx. 25 mm, M10 x 1.0; with plastic plug connector Ø = approx. 11 mm, NL = approx. 25 mm
Mounting (sensor):	cut-out Ø = 11 - 15 mm, inserted length (EL) = approx. 50 mm, lock nut for fixing is included in the scope of delivery.
Electrical connection:	0.2 - 1.5 mm², using push-in terminals
Permissible air humidity:	< 95 % r. H., non-precipitating air
Protection class:	III (according to EN 60 730)
Protection type:	IP 65 (according to EN 60 529)
Standards:	CE conformity, electromagnetic compatibility according to EN 61326, according to EMC Directive 2014 / 30 / EU
Optional:	**Display with illumination**, three-line, programmable, cutout approx. 51 x 29 mm (W x H), for displaying the actual humidity and actual temperature (cyclic) or a selectable parameter (static) or an individually programmable display value (The Modbus interface allows the display to be individually configured in the 7-segment area and in the dot-matrix area.)
ACCESSORIES	see table

Schematic diagram **Modbus Tyr 3**

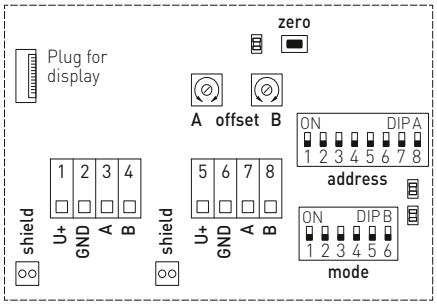

DIP A: Bus address
DIP B: Bus parameters (Baud rate, parity...)
Telegram indicator
Reception (LED green)
Error (LED red)
LED (internal status)
Reset button
Offset correction
Shielding

Programmable display screen **Modbus Tyr 3**

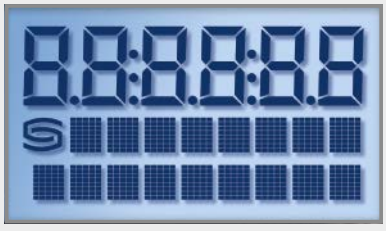

NEW

HYGRASGARD® VFTF-Modbus-T3

Showcase humidity and temperature sensor (± 2.0 %), for mixture ratio, relative / absolute humidity, dew point, enthalpy and temperature, calibratable, with Modbus connection

Dimensional drawing **VFTF-Modbus-T3**

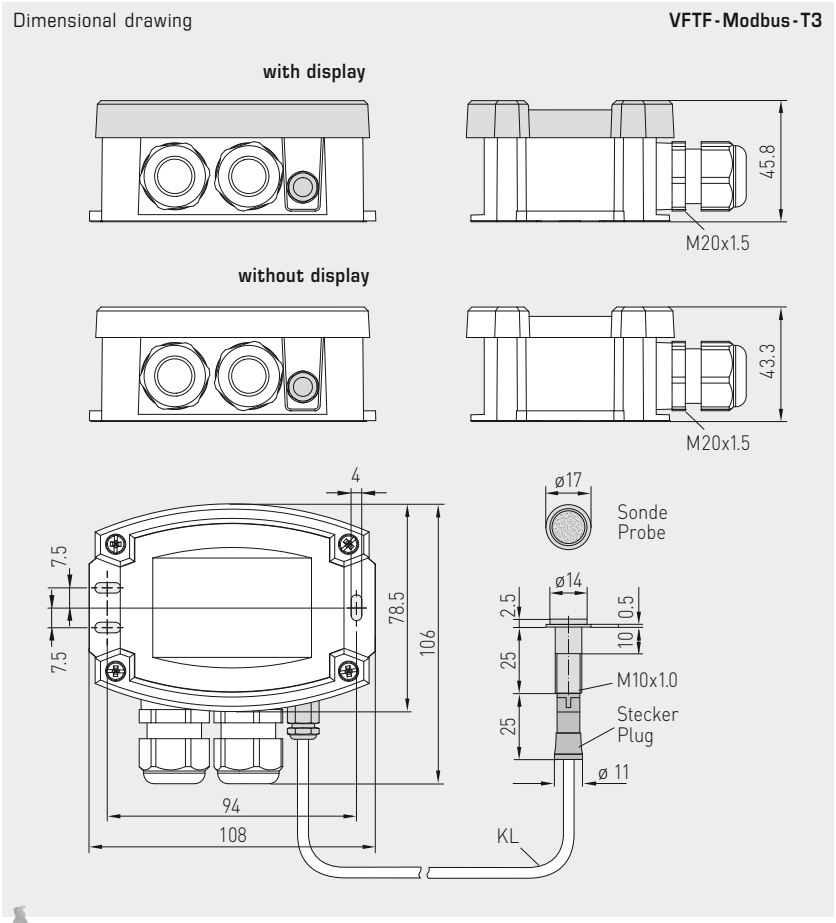

VFTF-Modbus-T3
with display







Probe
made of stainless steel, pluggable



HYGRASGARD® VFTF-Modbus-T3 Showcase humidity and temperature sensor (± 2.0 %), *Premium*

Type / WG01	Measuring Range / Readout Humidity (switchable)	Temperature	Output	Display	Item no.
VFTF-Modbus-T3					
VFTF-MODBUS-T3	0 ...100 % r. H. (default) 0 ... 80 g / kg (MR) 0 ... 80 g / m³ (A.H.) 0 ... 85 kJ / kg (ENT.) –20...+80 °C (DP)	–35...+80 °C	Modbus		1201-6256-1000-000
VFTF-MODBUS-T3	(5 x as above)	(1 x as above)	Modbus	■	1201-6256-1400-000
Extra charge:	**cable length** (KL = approx. 2 m), other lengths optional				on request

ACCESSORIES		
KA-2	**Modbus communication adapter** (USB/RS485) for direct system connection or/and as an active bus termination resistance	on request
	For further information, see last chapter Accessories!	

HYGRASGARD® TW - Modbus - T3

Dew point control switches, incl. strap / with detached sensor head (± 2.0 %), for mixture ratio, relative / absolute humidity, dew point, enthalpy and temperature, calibratable, with Modbus connection

NEW

S+S REGELTECHNIK

Patented quality product
(pro-dynamic cross convection patent no. DE 10 2012 015 726.6)

Calibratable dew point control switches **HYGR**ASGARD® **TW - Modbus - T3** incl. strap / with detached sensor head, with Modbus connection. It reliably detects formation of dew by means of its humidity and temperature sensor (no conductivity measurement) and, thanks to its patented measuring method, **pro-dynamic cross convection**, yields an exact measurement result, with / without optional display.

The universal surface-contact sensor is used to detect various parameters in humidity measurement. The relative humidity and temperature of the ambient air are measured. These measurands are used to calculate various parameters internally. The Modbus can be used to retrieve the following parameters: relative humidity [% r. h.], absolute humidity [g / m³], mixture ratio [g / kg], dew point temperature [°C], enthalpy [kJ / kg] (ignoring atmospheric air pressure) and ambient temperature [°C].

It is used in non-aggressive, dust-free environments, in the refrigeration, air conditioning and clean room technology, hotels, engineering rooms, meeting and conference facilities. The sensor is suitable for ceiling and duct installation or for integration in equipment. Fine adjustment by the user is possible.

TW - Modbus - T3
with strap



TECHNICAL DATA

Voltage supply:	24 V AC (± 20 %) and 15...36 V DC
Power consumption:	< 2 W / 24 V DC; < 3.5 VA / 24 V AC
Data points:	Temperature [°C], relative humidity [% r.h.], dew point [°C], absolute humidity [g / m³], mixture ratio [g / kg], enthalpy [kJ / kg]
Sensor:	**Digital humidity sensor with integrated temperature sensor,** low hysteresis, high long-term stability
Sensor protection:	membrane filter
Measuring range:	0...100 % r.H. (humidity) – 35...+ 80 °C (temperature)
Deviation, humidity:	typically **± 2.0** % (20...80 % r. H.) at +25 °C, otherwise ± 3.0 %
Deviation, temperature:	typically ± 0.2 K at +25 °C
Zero point offset:	± 10 % r.H. (humidity) ± 10 °C (temperature)
Ambient temperature:	– 30...+ 70 °C
Medium:	clean air and non-aggressive, non-combustible gases
Bus protocol:	Modbus (RTU mode), address range 0...**247** selectable
Signal filtering:	4 s / 32 s
Enclosure:	plastic, UV-stabilised, material polyamide, 30 % glass-globe reinforced, with quick-locking screws (slotted / Phillips head combination), colour traffic white (similar to RAL 9016), enclosure cover for display is transparent!
Enclosure dimensions:	108 x 78.5 x 43.3 mm (Tyr 3 without display) 108 x 78.5 x 45.8 mm (Tyr 3 with display)
Cable gland:	2x M 20 x 1.5; with strain relief, exchangeable, inner diameter 8 - 13 mm
Process connection:	endless metal strap with metal tightener, 300 mm, for pipes up to 3" (included in scope of delivery)
Installation:	**TW - Modbus** with strap for direct mounting on pipes or for direct mounting on flat surfaces (e.g. walls, ceilings) **TW - Modbus - external** with detached sensor head (cable length KL = 1.5 m) for mounting on pipes
Electrical connection:	0.2 - 1.5 mm², using push-in terminals
Permissible air humidity:	< 95 % r. H., non-precipitating air
Protection class:	III (according to EN 60 730)
Protection type:	IP 65 (according to EN 60 529)
Standards:	CE conformity, electromagnetic compatibility according to EN 61326, according to EMC Directive 2014 / 30 / EU
Optional:	**Display with illumination**, three-line, programmable, cutout approx. 51 x 29 mm (W x H), for displaying the actual humidity and actual temperature (cyclic) or a selectable parameter (static) or an individually programmable display value (The Modbus interface allows the display to be individually configured in the 7-segment area and in the dot-matrix area.)
ACCESSORIES	see table

TW - external - Modbus - T3
with detached sensor head



NEW

HYGRASGARD® TW-Modbus-T3

Dew point control switches, incl. strap / with detached sensor head (± 2.0 %), for mixture ratio, relative / absolute humidity, dew point, enthalpy and temperature, calibratable, with Modbus connection

Dimensional drawing — **TW-Modbus-T3**

with display

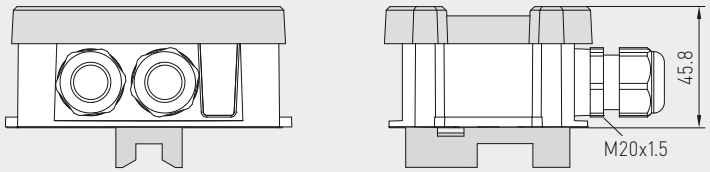

without display

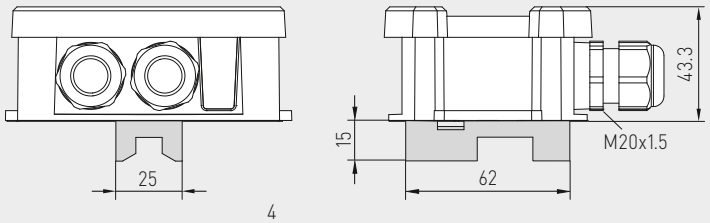

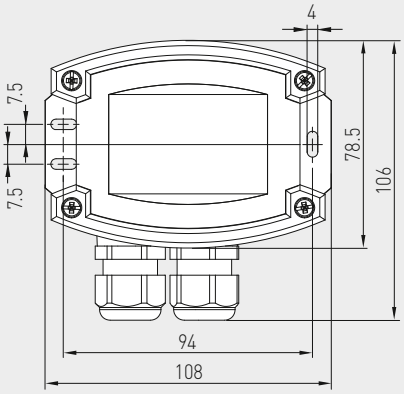



TW-Modbus-T3
with strap
and display



Dimensional drawing — **TW-external-Modbus-T3**

with display

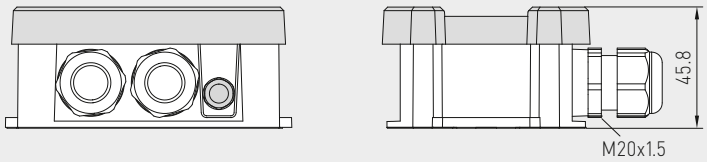

without display

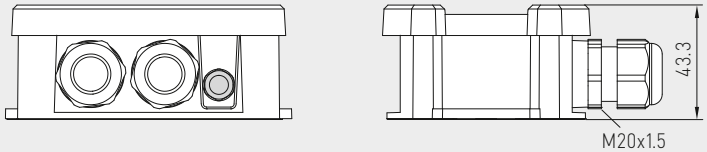

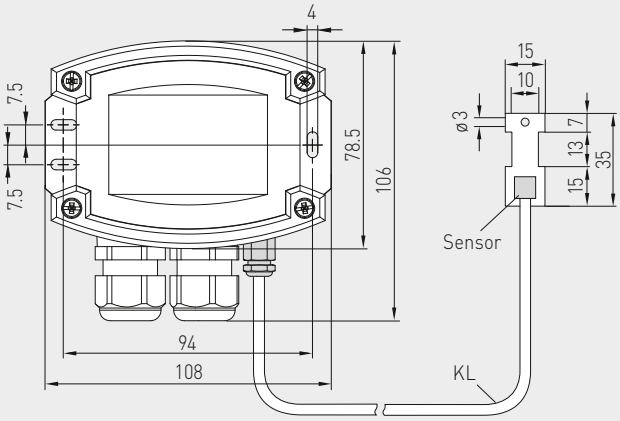

TW-external-Modbus-T3
with detached sensor head
and display



HYGRASGARD® TW - Modbus - T3

Dew point control switches, incl. strap / with detached sensor head (± 2.0 %), for mixture ratio, relative / absolute humidity, dew point, enthalpy and temperature, calibratable, with Modbus connection

NEW

S+S REGELTECHNIK

Display screen (cyclic)
standard

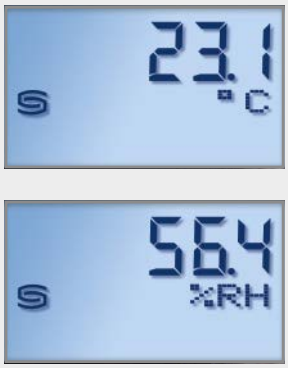

Display screen (static)
alternative output variables

HYGRASGARD® Modbus-T3



By default, the display alternates between the **actual temperature** and the **actual humidity** (relative humidity).
For improved legibility, backlighting is provided.

The Modbus interface can be used to program an **alternative output variable** instead of the standard display. In this case, the first line indicates the value while the second line indicates the corresponding unit **statically**. The index in the third line indicates the display type:

Index 1 = dew point [**°C**]
Index 2 = absolute humidity [**g / m³**]
Index 3 = mixture ratio [**g / kg**]
Index 4 = enthalpy [**kJ / kg**]
Index 5 = temperature [**°C**]
Index 6 = relative humidity [% **r.H.**]

Programmable display screen — **Modbus Tyr 3**

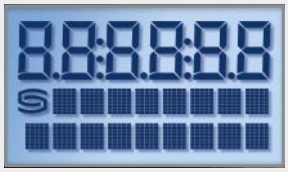

The Modbus interface allows the display to be **individually** configured both in the 7-segment area and in the dot-matrix area.

TW-Modbus-T3
pro-dynamic cross convection





PATENTED



Schematic diagram — **Modbus Tyr 3**

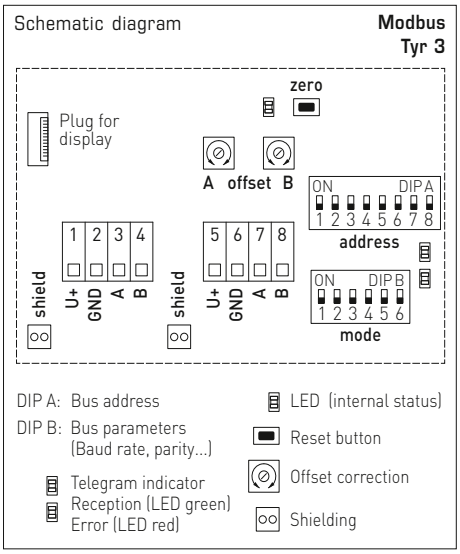

Dew point control switches, incl. strap / with detached sensor head (± 2.0 %), for mixture ratio, relative / absolute humidity, dew point, enthalpy and temperature, calibratable, with Modbus connection

TW-Modbus-T3
with display



HYGRASGARD® TW-Modbus-T3 Dew point control switches, incl. strap (± 2.0 %)
HYGRASGARD® TW-external-Modbus-T3 Dew point control switches, with detached sensor head (± 2.0 %)

Type / WG01	Measuring Range / Readout Humidity (switchable)	Temperature	Output	Display	Item No.
TW-Modbus-T3					
TW-MODBUS-T3	0 ...100 % r. H. (default) 0 ... 80 g / kg (MR) 0 ... 80 g / m³ (A.H.) 0 ... 85 kJ / kg (ENT.) –20...+80 °C (DP)	–35...+80 °C	Modbus		1201-1281-3001-020
TW-MODBUS-T3 LCD	(5 x as above)	(1 x as above)	Modbus	■	1201-1281-3401-020
TW-external-Modbus-T3					
TW-EXTERN-MODBUS-T3	0 ...100 % r. H. (default) 0 ... 80 g / kg (MR) 0 ... 80 g / m³ (A.H.) 0 ... 85 kJ / kg (ENT.) –20...+80 °C (DP)	–35...+80 °C	Modbus		1201-1281-3001-030
TW-EXTERN-MODBUS-T3 LCD	(5 x as above)	(1 x as above)	Modbus	■	1201-1281-3401-030

ACCESSORIES		
KA-2	**Modbus communication adapter** with USB/RS485 interface for system connection or/and as an active bus termination resistance	on request
	For further information, see last chapter Accessories!	

PREMASGARD® 232x - Modbus - T3

**Pressure and differential pressure measuring transducers,
incl. connection set,
with Modbus connection**

NEW

S+S REGELTECHNIK

The maintenance-free microprocessor-controlled **PREM**ASGARD® **232x - Modbus - T3** (series), with Modbus connection, impact-resistant plastic enclosure, enclosure cover with quick-locking screws, optionally with /without display, is used for detecting positive, negative, or differential pressure measurement in clean air.

The piezo-resistive measuring element is temperature-compensated and guarantees high reliability and accuracy. The pressure transmitters are provided with a push-button for manual zero point calibration and an adjustable offset. Applications of these pressure sensors are in cleanroom, medical and filter technology, at ventilation and air conditioning ducts, at spray booths, in large-scale catering facilities, for filter monitoring and level measurement, or for triggering frequency converters. Media measured with these pressure transducers are air (non-precipitating), or other gaseous non-aggressive, non-combustible media.

The pressure sensor has a manual zero point pushbutton. Fine adjustment by the user is possible at any time. The delivery includes the connection set **ASD-06** (2 m connection hose, two pressure connection nipples, screws).

PREMASGARD® **232x - Modbus - T3**





TECHNICAL DATA

Power supply:	24 V AC (±20 %) and 15...36 V DC
Power consumption:	< 2 W / 24 V DC; < 3.5 VA / 24 V AC
Type of pressure:	differential pressure
Pressure connection:	4 / 6 x 11 mm (hoses Ø = 4 / 6 mm)
Measuring ranges:	**–500... +500 Pa** or **–7000...+7000 Pa** depending on the type of device, see table
Accuracy:	**Type 2328** (500 Pa): typically ± 3 Pa at +25 °C **Type 2327** (7000 Pa): typically ± 35 Pa at +25 °C compared to the calibrated reference device
Above- / below-pressure:	max. ± 50 kPa
Zero point offset:	± 10 % of pressure range
Medium:	clean air and other non-aggressive, non-combustible gases
Media contacting parts:	Brass, Ni, Duroplast, Si, epoxy, RTV, BSG, UV silicone gel
Media temperature:	–20...+50 °C (temperature-compensated 0...+50 °C)
Hysteresis:	0.3 % of final value
Linearity:	< ± 1 % of final value
Temperature drift values:	± 0.1 % of final value / °C
Long-term stability:	± 1 % per year
Enclosure:	plastic, UV-stabilised, material polyamide, 30 % glass-globe reinforced, with quick-locking screws (slotted / Phillips head combination), colour traffic white (similar to RAL 9016), enclosure cover for display is transparent!
Enclosure dimensions:	108 x 78.5 x 43.3 mm (Tyr 3 without display) 108 x 78.5 x 45.8 mm (Tyr 3 with display)
Cable gland:	2x M 20 x 1,5; with strain relief, exchangeable, inner diameter 8 - 13 mm
Electrical connection:	0.2 - 1.5 mm², using push-in terminals
Permissible air humidity:	< 95 % r. H., non-precipitating air
Protection class:	III (according to EN 60 730)
Protection type:	IP 65 (according to EN 60 529)
Standards:	CE conformity, electromagnetic compatibility according to EN 61 326, EMC directive 2014 / 30 / EU
Optional:	**Display with illumination**, three-line, programmable, cut-out approx. 51 x 29 mm (W x H), for displaying the ACTUAL pressure or an individually programmable display value (The Modbus interface allows the display to be individually configured in the 7-segment area and in the dot-matrix area.)
ACCESSORIES	see table
ASD-06	**Connection set** (nipple straight) – (included in the scope of delivery)
ASD-07	**Connection nipple** (at 90 degree angle)
DAL-01	**Pressure outlet** for ceiling or in-wall installation (e.g. in clean rooms)

Programmable display screen — **Modbus Tyr 3**

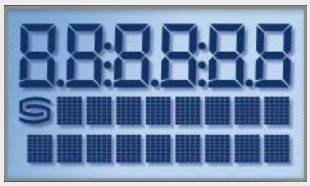

Pressure and differential pressure measuring transducers, incl. connection set, with Modbus connection

Dimensional drawing

PREMASGARD® 232x - Modbus - T3

with display

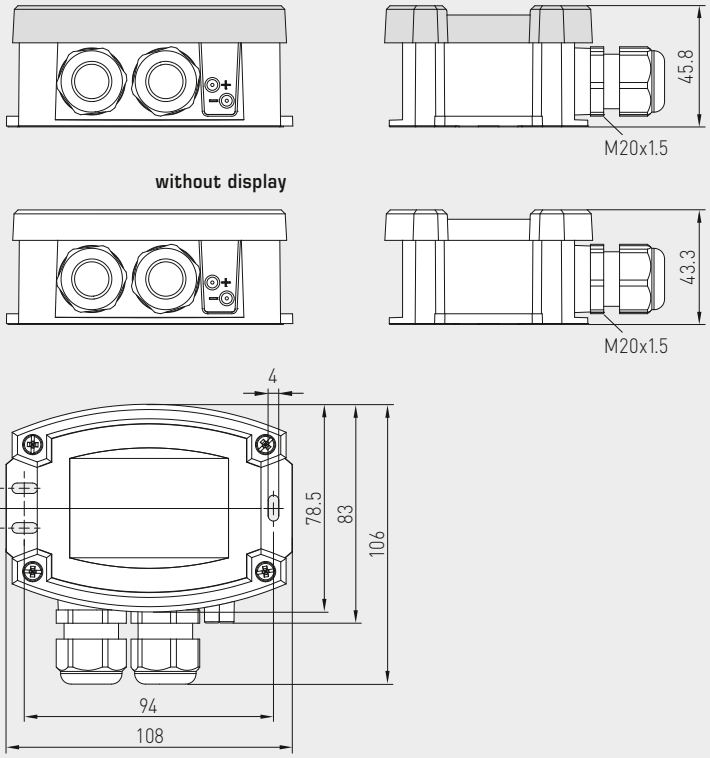

PREMASGARD® 232x - Modbus - T3
with display





Dimensional drawing

ASD-06
Connection set

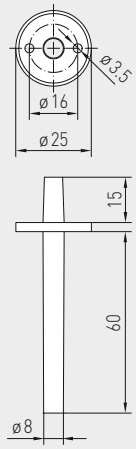

Dimensional drawing

ASD-07
Connection nipple

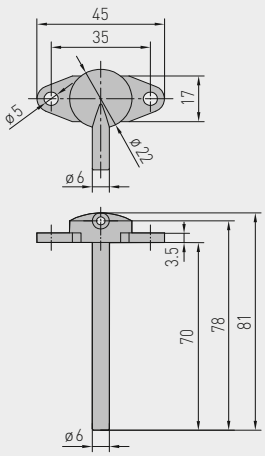

Dimensional drawing

DAL-01
Pressure outlet

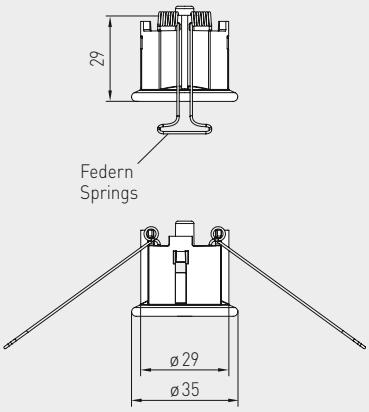

ASD-06
Connection set



ASD-07
Connection nipple



DAL-01
Pressure outlet



**Pressure and differential pressure measuring transducers,
incl. connection set,
with Modbus connection**

NEW

S+S REGELTECHNIK

WS-04
Weather and sun protection hood
(optional)



Schematic diagram **Modbus Tyr 3**

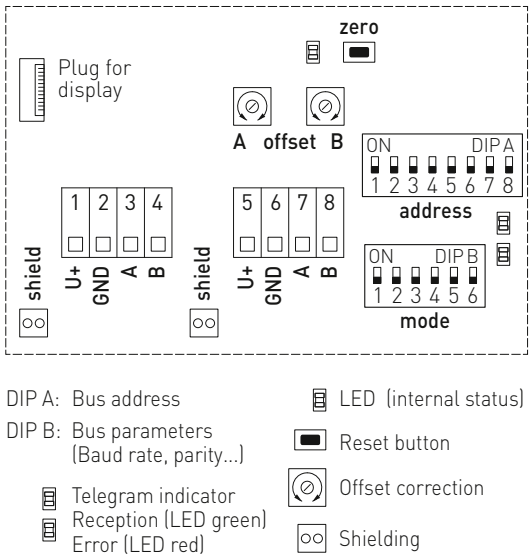

DIP A: Bus address
DIP B: Bus parameters (Baud rate, parity...)
Telegram indicator
Reception (LED green)
Error (LED red)
LED (internal status)
Reset button
Offset correction
Shielding

Mounting diagram **PREMASGARD® 232x - Modbus - T3**

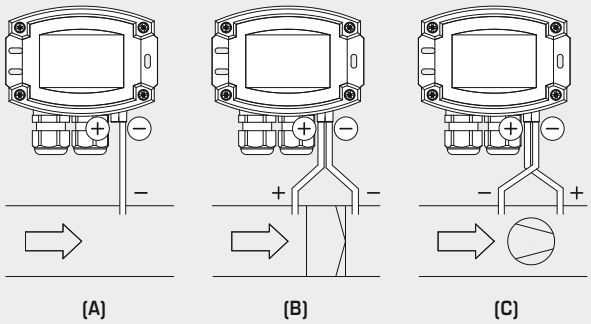

TYPES OF MONITORING:

(A) Below-atmospheric pressure:
P1 (+) is not connected
but open against atmosphere
P2 (–) connected to inside of duct

(B) Filter:
P1 (+) connected upstream of filter
P2 (–) connected downstream of filter

(C) Ventilator:
P1 (+) connected downstream of ventilator
P2 (–) connected upstream of ventilator

Pressure connections at the pressure switch are marked with
P1 (+) for higher pressure and
P2 (–) for lower pressure.

Conversion table for pressure values:

Unit =	bar	mbar	Pa	kPa	mH_2O
1 Pa	0.00001 bar	0.01 mbar	1 Pa	0.001 kPa	0.000101971 mH_2O
1 kPa	0.01 bar	10 mbar	1000 Pa	1 kPa	0.101971 mH_2O
1 bar	1 bar	1000 mbar	100000 Pa	100 kPa	10.1971 mH_2O
1 mbar	0.001 bar	1 mbar	100 Pa	0.1 kPa	0.0101971 mH_2O
1 mH_2O	0.0980665 bar	98.0665 mbar	9806.65 Pa	9.80665 kPa	1 mH_2O

PREMASGARD® **232x - Modbus - T3**
with display



PREMASGARD® 232x - Modbus - T3 Pressure and differential pressure measuring transducers

Type / WG01	Measuring Range Pressure range	Output	Display	Item No.
PREMASGARD® **2328 - Modbus - T3**	**– 500...+ 500 Pa**			
PREMASGARD 2328	–500...+ 500 Pa	Modbus		1301-12C4-0910-200
PREMASGARD 2328 LCD	–500...+ 500 Pa	Modbus	■	1301-12C4-4910-200
PREMASGARD® **2327 - Modbus - T3**	**– 7000...+ 7000 Pa**			
PREMASGARD 2327	–7000...+ 7000 Pa	Modbus		1301-12C4-0950-200
PREMASGARD 2327 LCD	–7000...+ 7000 Pa	Modbus	■	1301-12C4-4950-200

ACCESSORIES		
KA-2	**Modbus communication adapter** with USB/RS485 interface for system connection or/and as an active bus termination resistance	on request
ASD-06	**Connection set (included in the scope of delivery),** consisting of 2 connection nipples (straight) made of ABS, 2 m PVC hose, soft, and 4 tapping screws	7100-0060-3000-000
ASD-07	**2 connection nipples** (at 90 degree angle) made of plastic, ABS	7100-0060-7000-000
DAL-01	**Pressure outlet** for ceiling or in-wall installation (e.g. in clean rooms)	7300-0060-3000-001
WS-04	**Weather and sun protection hood,** 130 x 180 x 135 mm, stainless steel **V2A** (1.4301)	7100-0040-7000-000
	For further information, see last chapter Accessories!	

PREMASGARD® 814x-Modbus

Multifunctional duct sensors and measuring transducers for humidity, temperature, pressure, differential pressure and volume flow, incl. mounting flange and connection set, calibratable, with Modbus connection

NEW

S+S REGELTECHNIK

The maintenance-free microprocessor-controlled **PREM**ASGARD® **814x-Modbus** (series) with Modbus connection, enclosure made of impact-resistant plastic with quick-locking screws, with plastic sinter filter (optional metal sinter filter), with/without optional display, is used for precise detection of relative air humidity and temperature in ducts as well as for measuring differential pressure of air.

A digital, long-term stable sensor as a measuring element for relative humidity and temperature guarantees exact measurement results. These measurands are used to calculate various parameters internally. The Modbus can be used to retrieve the following parameters: temperature [°C], relative humidity [% r.h.], dew point [°C], absolute humidity [g/m³], mixing ratio [g/kg], enthalpy [kJ/kg] (ignoring atmospheric air pressure), differential pressure [Pa], volume flow [m³/h], air density [kg/m³].

The pressure sensor is used for above-atmospheric, below-atmospheric, or differential pressure measurement in clean air. The piezo-resistive measuring element guarantees a high degree of reliability and accuracy. Applications of these pressure sensors are in clean room, medical and filter technology, in ventilation and air conditioning ducts, in spray booths, in large-scale catering facilities, for monitoring filters, for level measurement or for triggering frequency converters. Media measured with these pressure transducers are air (non-precipitating), or other gaseous non-aggressive, non-combustible media.

The pressure sensor has a manual zero point pushbutton (optional automatic zero point calibration) and an offset potentiometer for final value correction. Fine adjustment by the user is possible at any time. The delivery includes the connection set **ASD-06** (2 m connection hose, two pressure connection nipples, screws).

PREMASGARD® **814x-Modbus**
with plastic sinter filter (standard)



TECHNICAL DATA

Power supply:	24 V AC (±20%) and 15...36 V DC
Power consumption:	< 4.8 W / 24 V DC typical; < 6.8 VA / 24 V AC typical; peak current 200 mA
Data points:	differential pressure [Pa], temperature [°C], relative humidity [% r.h.], dew point [°C], absolute humidity [g/m³], mixing ratio [g/kg], enthalpy [kJ/kg], volume flow [m³/h], air density [kg/m³]
HUMIDITY	
Sensors:	**digital humidity sensor with integrated temperature sensor,** low hysteresis, high long-term stability
Sensor protection:	**plastic** sinter filter, Ø 16 mm, L = 35 mm, exchangeable (optional **metal** sinter filter, Ø 16 mm, L = 32 mm)
Measuring range, humidity:	0...100% r. H.
Operating range, humidity:	0...95% r. H. (without dew formation)
Deviation in humidity:	typically **±2.0**% (20...80% r.H.) at +25 °C, otherwise ±3.0%
TEMPERATURE	
Measuring range, temperature:	–35...+80 °C
Deviation in temperature:	typically ±0.2 K at +25 °C
PRESSURE	
Type of pressure:	differential pressure
Pressure connection:	4/6 x 11 mm (hoses Ø = 4/6 mm), metal pressure connection nozzles
Measuring range, pressure:	**–500... +500 Pa** or **–7000...+7000 Pa** depending on the type of device, see table
Accuracy, pressure:	**Type 8148** (500 Pa): typically ± 3 Pa at +25 °C **Type 8147** (7000 Pa): typically ± 35 Pa at +25 °C compared to the calibrated reference device
Above-/below-pressure:	max. ± 50 kPa
Zero point offset:	±10 % of final value
Medium:	clean air and non-aggressive, non-combustible gases
Media contacting parts:	Brass, Ni, thermoset plastic, Si, epoxy, RTV, BSG, UV silicone gel
Media temperature:	–20...+50 °C (temperature-compensated 0...+50 °C)
Hysteresis:	0.3% of final value
Linearity:	< ±1% of final value
Temp. drift values:	± 0.1% / °C
Long-term stability:	±1% per year

Continued on next page!

Display screen (cyclic/static) **Modbus Tyr 2**



Pressure



Temperature



Humidity



Volume flow rate

Programmable display screen **Modbus Tyr 2**



NEW

PREMASGARD® 814x - Modbus

Multifunctional duct sensors and measuring transducers for humidity, temperature, pressure, differential pressure and volume flow, incl. mounting flange and connection set, calibratable, with Modbus connection

Dimensional drawing — **PREMASGARD® 814x - Modbus**

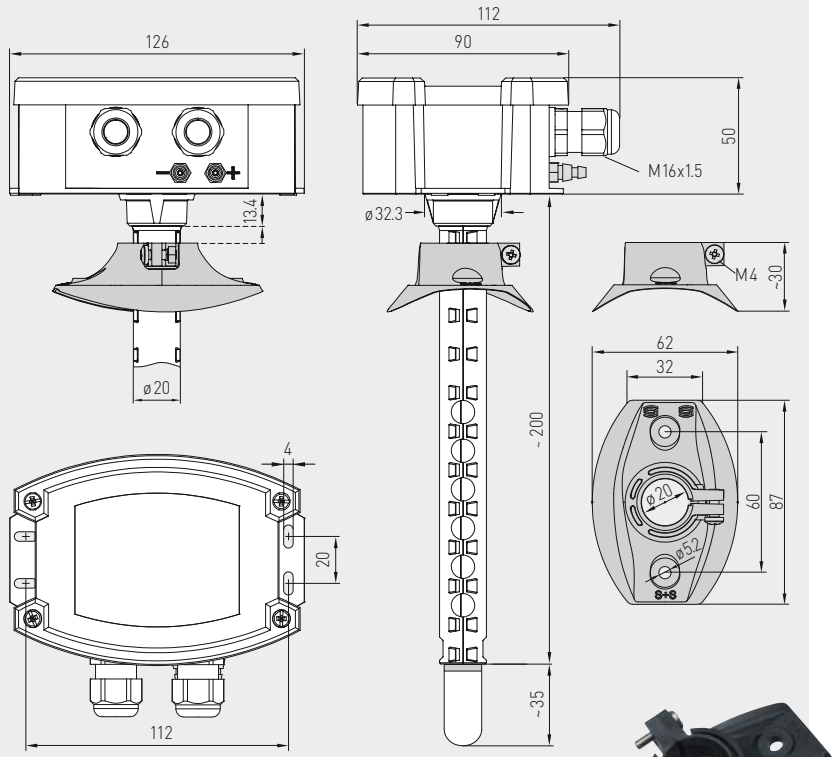

PREMASGARD® 814x - Modbus
with display and plastic sinter filter (standard)







MFT-20-K
Mounting flange, plastic

TECHNICAL DATA (continued)

Bus protocol:	Modbus (RTU mode), address range 0...**247** adjustable
Signal filtering:	4 s / 32 s at temperature / humidity 0 s / 1 s / 10 s at pressure
Ambient temperature:	–30...+70 °C
Electrical connection:	0.2 - 1.5 mm², via push-in terminal
Enclosure:	plastic, UV-stabilised, material polyamide, 30 % glass-globe reinforced, with quick-locking screws (slotted / Phillips head combination), colour traffic white (similar to RAL 9016), enclosure cover for display is transparent!
Enclosure dimensions:	126 x 90 x 50 mm (Typ 2)
Cable gland:	2x M 16 x 1.5 ; including strain relief, exchangeable
Protective tube:	**PLEUROFORM**™, material: polyamide (PA6), with torsion protection, v_{max} = 30 m/s (air), Ø 20 mm, (on request, optional stainless steel **V2A** (1.4301), Ø 16 mm) with plastic sinter filter: NL = 235 mm (optional with metal sinter filter: NL = 227 mm)
Process connection:	via mounting flange made of plastic (included in the scope of delivery)
Protection class:	III (according to EN 60 730)
Protection type:	IP 65 (according to EN 60 529) enclosure only! (PLEUROFORM IP 30)
Standards:	CE-conformity, electromagnetic compatibility according to EN 61 326, EMC Directive 2014 / 30 / EU
Optional:	three-line **display with illumination,** programmable, cut-out approx. 70 x 40 mm (W x H), for display actual humidity, actual temperature and ACTUAL pressure (cyclic) or a selectable parameter (static) or an individually programmable display value (The Modbus interface allows the display to be individually configured in the 7-segment area and in the dot-matrix area.)
ACCESSORIES	see table
ASD-06	**Connection set** (nipple straight) – (included in the scope of delivery)
MFT-20 K	**Mounting flange** plastic (included in the scope of delivery)

PREMASGARD® 814x-Modbus

Multifunctional duct sensors and measuring transducers for humidity, temperature, pressure, differential pressure and volume flow, incl. mounting flange and connection set, calibratable, with Modbus connection

NEW

S+S REGELTECHNIK

Dimensional drawing **ASD-06** Connection set

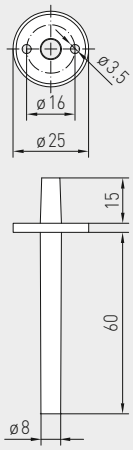

Dimensional drawing **ASD-07** Connection nipple

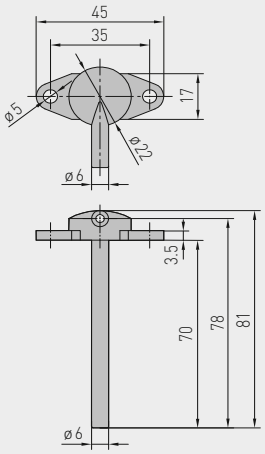

Dimensional drawing **DAL-01** Pressure outlet

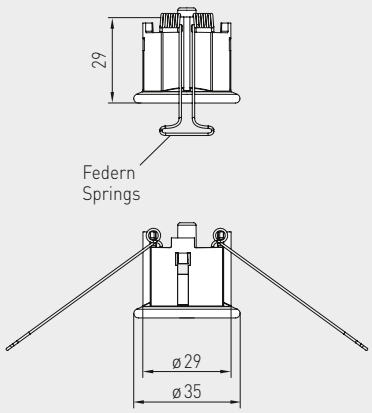

ASD-06 Connection set



ASD-07 Connection nipple



DAL-01 Pressure outlet



Mounting diagram **PREMASGARD® 814x-Modbus**

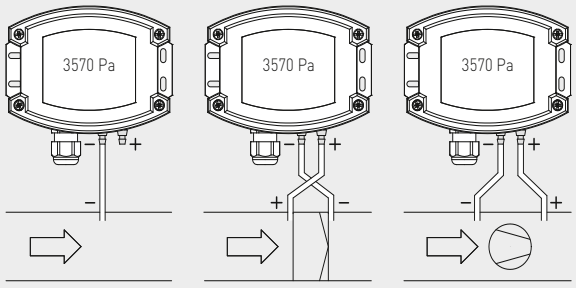

TYPES OF MONITORING:

(A) Below-atmospheric pressure:
P1 (+) is not connected but open against atmosphere
P2 (–) connected to inside of duct

(B) Filter:
P1 (+) connected upstream of filter
P2 (–) connected downstream of filter

(C) Ventilator:
P1 (+) connected downstream of ventilator
P2 (–) connected upstream of ventilator

Pressure connections at the pressure switch are marked with
P1 (+) for higher pressure and
P2 (–) for lower pressure.

Conversion table for pressure values:

Unit =	bar	mbar	Pa	kPa	mH_2O
1 Pa	0.00001 bar	0.01 mbar	1 Pa	0.001 kPa	0.000101971 mH_2O
1 kPa	0.01 bar	10 mbar	1000 Pa	1 kPa	0.101971 mH_2O
1 bar	1 bar	1000 mbar	100000 Pa	100 kPa	10.1971 mH_2O
1 mbar	0.001 bar	1 mbar	100 Pa	0.1 kPa	0.0101971 mH_2O
1 mH_2O	0.0980665 bar	98.0665 mbar	9806.65 Pa	9.80665 kPa	1 mH_2O

NEW

PREMASGARD® 814x - Modbus

Multifunctional duct sensors and measuring transducers for humidity, temperature, pressure, differential pressure and volume flow, incl. mounting flange and connection set, calibratable, with Modbus connection

Schematic diagram **PREMASGARD® 814x - Modbus**

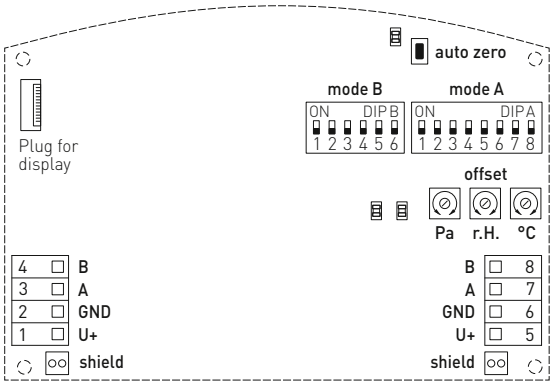

DIP A: Bus address
DIP B: Bus parameters (Baud rate, parity...)
Telegram indicator Reception (LED green) Error (LED red)
LED (internal status)
Reset button
Offset correction
Shielding

PREMASGARD® 814x - Modbus with display





SF-K
Plastic sinter filter (standard)



SF-M
Metal sinter filter (optional)
stainless steel protective tube (optional on request)

PREMASGARD® 814x - Modbus Multifunctional duct sensor for humidity, temperature, pressure, differential pressure and volume flow rate, *Deluxe*

Type / WG02	Measuring ranges Pressure	Humidity	Temperature	Output	Display	Item no.
PREMASGARD® 8148 - Modbus	**–500...+500 Pa**					
PREMASGARD 8148-M	–500...+500 Pa	0...100% r.H.	–35...+80°C	Modbus		1301-8144-0910-20V
PREMASGARD 8148-M LCD	–500...+500 Pa	0...100% r.H.	–35...+80°C	Modbus	■	1301-8144-4910-20V
	Equipped as standard with automatic zero point calibration					
PREMASGARD® 8147 - Modbus	**–7000...+7000 Pa**					
PREMASGARD 8147-M	–7000...+7000 Pa	0...100% r.H.	–35...+80°C	Modbus		1301-8144-0950-200
PREMASGARD 8147-M LCD	–7000...+7000 Pa	0...100% r.H.	–35...+80°C	Modbus	■	1301-8144-4950-200
Extra charge:	**with optional automatic zero point calibration** (please specify in your order)					

ACCESSORIES		
KA-2	**Modbus communication adapter** with USB/RS485 interface for system connection or/and as an active bus termination resistance	on request
ASD-06	**Connection set (included in the scope of delivery)** consisting of 2 connection nipples (straight) made of ABS, 2 m PVC hose, soft, and 4 tapping screws	7100-0060-3000-000
ASD-07	**2 connection nipples** (at 90° angle) made of ABS	7100-0060-7000-000
DAL-01	**Pressure outlet** for ceiling or in-wall installation (e.g. in clean rooms)	7300-0060-3000-001
SF-M	**Metal** sinter filter, Ø 16 mm, L = 32 mm, exchangeable, stainless steel **V4A** (1.4404)	7000-0050-2200-100
MFT-20-K	**Mounting flange**, plastic (included in the scope of delivery)	7000-0031-0000-000
	For further information see last chapter!	

AERASGARD® RCO$_2$ / RLQ - CO$_2$ - Modbus
AERASGARD® RFTM - (LQ) - CO$_2$ - Modbus

Multifunctional room sensors and measuring transducers, for humidity, temperature, air quality (VOC) and CO$_2$ content, calibratable, with Modbus connection

S+S REGELTECHNIK

The maintenance-free, microprocessor-controlled **AER**ASGARD® **RFTM - LQ - CO$_2$ - Modbus** and **RCO$_2$ / RLQ - CO$_2$ / RFTM - CO$_2$ - Modbus** with Modbus connection, with /without optional display, in an elegant enclosure, plastic, with snap-on lid, base with 4-hole attachment, is used to to monitor the entire room climate. For this purpose, measurands air humidity, temperature, CO$_2$ concentration as well as air quality (VOC) are measured. A setpoint potentiometer is optionally available as an operating element. By using a single device to monitor all four measurands, it is possible to effectively monitor and regulate the entire room climate. It measures CO$_2$ in the range of 0...5000 ppm, VOC at one of three selectable sensitivity levels LOW / MEDIUM / HIGH, temperatures in the range of 0...+50°C, as well as relative air humidity from 0...100 % r.H.

A digital, long-term stable sensor used as measuring element for relative air humidity and temperature guarantees exact measurement results. The air quality is determined based on a (VOC) gas mixture sensor. The CO$_2$ content of the air is measured using an optical NDIR sensor (non-dispersive infra-red technology).

TECHNICAL DATA

Voltage supply:	24 V AC / DC (± 10 %)
Power consumption:	< 4.4 W / 24 V DC typical; < 6.4 VA / 24 V AC typical; peak current 200 mA
Data points:	temperature [°C], relative humidity [% RH] air quality (VOC) [%], carbon dioxide (CO$_2$) [ppm] and setpoint potentiometer
HUMIDITY	
Sensors:	**digital humidity sensor with integrated temperature sensor,** low hysteresis, high long-term stability
Operating range, humidity:	0...95 % r. H. (without dew formation)
Deviation, humidity:	typically **± 2.0** % (20...80 % r. H.) at +25 °C, otherwise ± 3.0 %
TEMPERATURE	
Operating range, temperature:	0...+ 50 °C
Deviation, temperature:	typically ± 0.2 K at +25 °C
AIR QUALITY (VOC)	
Sensor, VOC :	VOC sensor (metal oxide) **with automatic calibration** (VOC = volatile organic compounds)
Measuring range, VOC :	0...100 % air quality; referred to calibrating gas; **multi-range switching** VOC sensitivity low, medium, high
Measuring accuracy, VOC :	± 20 % of final value (referred to calibrating gas)
Service life:	> 60 months (under normal load conditions)
CARBON DIOXIDE (CO$_2$)	
Sensor, CO$_2$:	optical NDIR sensor (non-dispersive infra-red technology) **with automatic and manual calibration**
Measuring range, CO$_2$:	0...5000 ppm
Measuring accuracy, CO$_2$:	typically ± 30 ppm ± 3 % of measured value
Temperature dependence, CO$_2$:	± 5 ppm / °C or ± 0.5 % of measured value / °C (whichever is higher)
Pressure dependence:	± 0.13 % / mm Hg
Long-term stability:	< 2 % in 15 years
Gas exchange:	by diffusion
Bus protocol:	Modbus (RTU-Mode), address range 0...**247** selectable
Signal filtering:	4 s / 32 s
Ambient temperature:	0...+50 °C
Warm up time:	approx. 1 hour
Response time:	< 2 minutes
Electrical connection:	0.2 - 1.5 mm^2, via push-in terminal
Enclosure:	plastic, material ABS, colour pure white (similar to RAL 9010)
Dimensions:	98 x 98 x 33 mm (Baldur 2)
Installation:	wall mounting or on in-wall flush box, Ø 55 mm, base with 4 holes, for attachment to vertically or horizontally installed in-wall flush boxes for rear cable entry, with predetermined breaking point for cable entry from top /bottom in case of plain on-wall installation
Protection class:	III (according to EN 60 730)
Protection type:	IP 30 (according to EN 60 529)
Standards:	CE conformity, electromagnetic compatibility according to EN 61 326, EMC Directive 2014 / 30 / EU, Low Voltage Directive 2014 / 35 / EU
Optional:	**display with illumination,** two line, cutout approx. 36 x 15 mm (W x H), for displaying actual humidity, actual temperature, air quality and the actual CO$_2$ content (cyclic) or a selectable parameter (static) or an individually programmable display value
ACCESSORIES	see table

Programmable display screen — **Modbus** (Baldur)



Temperature



Humidity



Air quality (VOC)



Carbon dioxide (CO$_2$)



Symbols

Schematic diagram — **R xx CO$_2$ - Modbus**

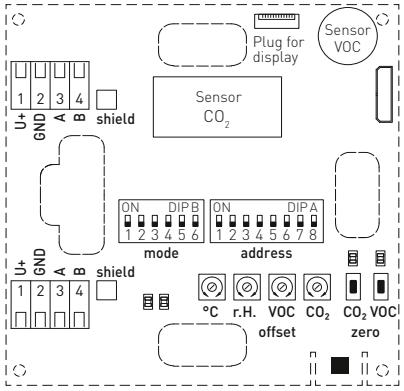

Schematic diagram — **RFTM - CO$_2$ - Modbus - P**

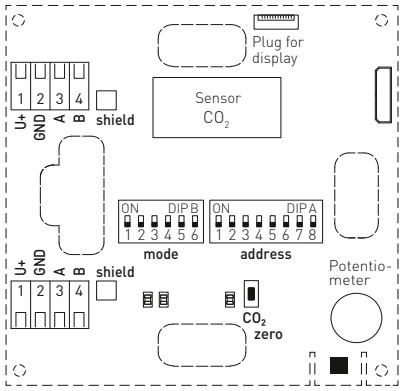

AERASGARD® RCO2 / RLQ-CO2-Modbus
AERASGARD® RFTM-(LQ)-CO2-Modbus

Multifunctional room sensors and measuring transducers, for humidity, temperature, air quality (VOC) and CO_2 content, calibratable, with Modbus connection

Dimensional drawing (Baldur 2)

R xx CO_2-Modbus
RFTM-CO_2-Modbus-P

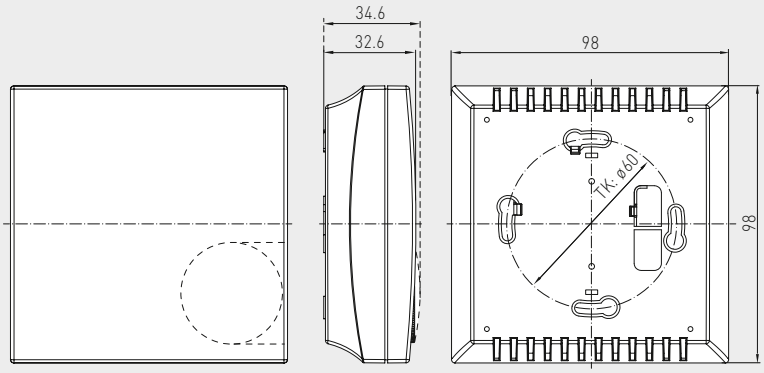

R xx CO_2-Modbus



RFTM-CO_2-Modbus-P
with display and potentiometer







AERASGARD® RCO2-Modbus	Room CO_2 sensor, *Deluxe*
AERASGARD® RLQ-CO2-Modbus	Room air quality (VOC) and CO_2 sensor, *Deluxe*
AERASGARD® RFTM-CO2-Modbus (-P)	Multifunctional room sensor (with potentiometer) for humidity, temperature and CO_2 content, *Deluxe*
AERASGARD® RFTM-LQ-CO2-Modbus	Multifunctional room sensor for humidity, temperature, air quality (VOC) and CO_2 content, *Deluxe*

Type / WG02	Measuring Range Humidity	Temperature	CO_2	VOC	Display	Item No.
RCO2-Modbus						
RCO2 MODBUS	–	–	5000 ppm	–		1501-61B0-6001-200
RCO2 MODBUS LCD	–	–	5000 ppm	–	■	1501-61B0-6021-200
RLQ-CO2-Modbus						
RLQ-CO2 MODBUS	–	–	5000 ppm	0...100 %		1501-61B1-6001-200
RLQ-CO2 MODBUS LCD	–	–	5000 ppm	0...100 %	■	1501-61B1-6021-200
RFTM-CO2-Modbus						
RFTM-CO2 MODBUS	0...100 % r.H.	0...+50 °C	5000 ppm	–		1501-61B6-6001-200
RFTM-CO2 MODBUS LCD	0...100 % r.H.	0...+50 °C	5000 ppm	–	■	1501-61B6-6021-200
RFTM-CO2-Modbus-P						with potentiometer
RFTM-CO2 MODBUS P	0...100 % r.H.	0...+50 °C	5000 ppm	–		1501-61B6-6501-271
RFTM-CO2 MODBUS P LCD	0...100 % r.H.	0...+50 °C	5000 ppm	–	■	1501-61B6-6521-271
RFTM-LQ-CO2-Modbus						
RFTM-LQ-CO2 MODBUS	0...100 % r.H.	0...+50 °C	5000 ppm	0...100 %		1501-61B8-6001-200
RFTM-LQ-CO2 MODBUS LCD	0...100 % r.H.	0...+50 °C	5000 ppm	0...100 %	■	1501-61B8-6021-200
Note:	This unit **must not** be used as safety-relevant device!					
ACCESSORIES						
KA-2	**Modbus communication adapter** with USB/RS485 interface for system connection or/and as an active bus termination resistance					on request

AERASGARD® FSFTM - CO_2 - Modbus

NEW

S+S REGELTECHNIK

Room humidity, temperature and CO_2 sensor or measuring transducer, in-wall in the panel switch programme, with Modbus connection

The room sensor and measuring transducer **AER**ASGARD® **FSFTM - CO_2 - Modbus** in the in-wall enclosure, optionally with potentiometer, is used to measure the CO_2 content, relative humidity and temperature of the air, and for setpoint adjustment.
The measured values are queried via the Modbus interface.

The CO_2 content of the air is measured using an optical NDIR sensor (non-dispersive infra-red technology). A digital, long-term stable sensor is used for humidity and temperature measurement. Relative humidity (% r.H.) is the quotient of water vapour partial pressure divided by the saturation vapour pressure at the respective gas temperature.

The in-wall sensor is mounted in high-quality panel switch programmes, ideally of the brands Gira, Berker, Merten, Jung, Siemens or Busch-Jaeger (using in-wall adapters, no setpoint adjustment possible) either individually or in combination with light switches, socket outlets, etc.

It is used in non-aggressive, dust-free environments, in refrigeration, air conditioning and clean room technology, and in interior rooms, such as living rooms, offices, hotels, etc.

Mounting diagram **in-wall**

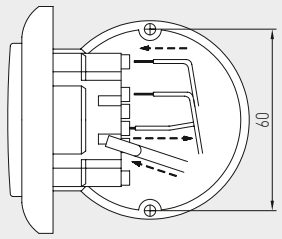

TECHNICAL DATA

Power supply:	24 V AC / DC (± 10 %)
Power consumption:	< 4.4 W / 24 V DC; < 6.4 VA / 24 V AC
Data points:	relative humidity (% r.H.), temperature (°C), CO_2 content of the air (ppm) as well as setpoint potentiometer (no setpoint adjustment possible with Busch-Jaeger)
Bus protocol:	Modbus (RTU mode), address range 0...**247** selectable
Signal filtering:	4 s / 32 s
CARBON DIOXIDE (CO_2)	
Sensor, CO_2:	**optical NDIR sensor** (non-dispersive infra-red technology), with manual calibration (via zero button) and automatic calibration (fixed)
Long-term stability:	< 2 % in 15 years
Measuring range, CO_2:	0...5000 ppm
Measuring accuracy, CO_2:	typically ± 30 ppm ± 3 % of measured value
Temperature dependence, CO_2:	± 5 ppm / °C or ± 0.5 % of measured value / °C (whichever is higher)
Pressure dependence:	± 0.13 % / mm Hg
Gas exchange:	by diffusion
Warm up time:	approx. 1 hour
Response time:	< 2 minutes
HUMIDITY	
Sensor:	**digital humidity sensor with integrated temperature sensor,** low hysteresis, high long-term stability
Long-term stability:	± 1 % per year
Measuring range, humidity::	0...100 % r. H.
Operating range, humidity:	0...95 % r. H. (non-precipitating air)
Deviation, humidity:	typically ± 3.0 % (20...80 % r. H.) at +25 °C, otherwise ± 5.0 %
TEMPERATURE	
Measuring range:	0...+50 °C
Deviation, temperature:	typically ± 0.8 K at +25 °C
Mounting:	in-wall flush box Ø 55 mm
Electrical connection:	0.14 - 1.5 mm², via screw terminals
Ambient temperature:	Storage –35...+85 °C; Operation 0...+50 °C
Permitted humidity:	max. 90 % r.H., non-precipitating air
Medium:	clean air and other non-aggressive, non-combustible gases
Protection class:	III (according to EN 60 730)
Protection type:	IP 20 (according to 60 529)
Standards:	CE-conformity, electromagnetic compatibility according to EN 61 326, EMC Directive 2014 / 30 / EU
SWITCH PROGRAMME	
Manufacturer:	GIRA System 55 (other switch programmes, manufacturers, colours as well as prices available upon request)
Enclosure:	plastic, the standard colour is pure glossy white (similar to RAL 9010) (other colours are available upon request with colour variants depending on the respective light switch programme)

Connection diagram **FSFTM - CO_2 - Modbus**

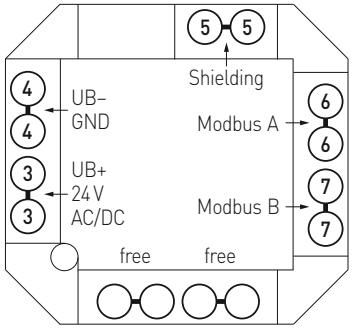

Room humidity, temperature and CO_2 sensor or measuring transducer, in-wall in the panel switch programme, with Modbus connection

Dimensional drawing **FSFTM - CO_2 - Modbus**

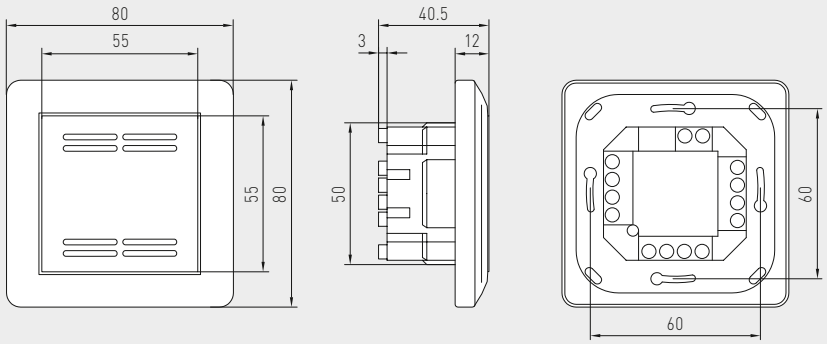

FSFTM - CO_2 - Modbus
Standard



Dimensional drawing **FSFTM - CO_2 - Modbus - P**

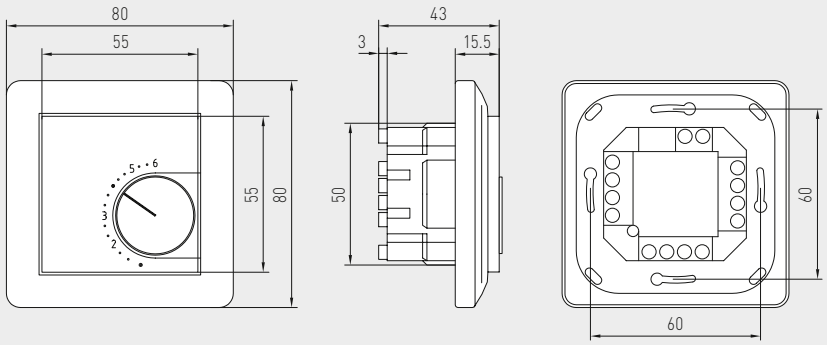

FSFTM - CO_2 - Modbus - P
with potentiometer



AERASGARD® FSTFM - CO_2 - Modbus Room temperature humidity and CO_2 sensor, in-wall

Type / WG02	Measuring Range CO_2	Humidity	Temperature	Control element	Output	Item No.
FSTFM - CO_2 - Modbus						
FSFTM-CO2-MODBUS	0...5000 ppm	0...100 % r. H.	0...+50 °C	–	Modbus	1501-9226-6001-162
FSFTM-CO2-MODBUS P	0...5000 ppm	0...100 % r. H.	0...+50 °C	Potentiometer	Modbus	1501-9226-6501-282
Data points:	relative humidity [% r. H.], temperature [°C], CO_2 content of the air [ppm] and setpoint potentiometer					

AERASGARD® ACO_2 / ALQ - CO_2 - Modbus
AERASGARD® AFTM - (LQ) - CO_2 - Modbus

Multifunctional on-wall sensors and measuring transducers, for humidity, temperature, CO_2 content and air quality (VOC), calibratable, with Modbus connection

S+S REGELTECHNIK

The maintenance-free, microprocessor-controlled **AER**ASGARD® **AFTM - LQ - CO_2 - Modbus** and **ACO_2 / ALQ - CO_2 / AFTM - CO_2 - Modbus** with Modbus connection, with /without optional display, is designed for on-wall installation and is used to monitor all measurands of relevance to the climate inside a room. These are the measurands air humidity, temperature, CO_2 concentration as well as air quality (VOC). By using a single device to monitor all four measurands, it is possible to effectively monitor and regulate the entire room climate. It measures CO_2 in the range of 0...5000 ppm, VOC at one of three selectable sensitivity levels LOW / MEDIUM / HIGH, temperatures in the range of –35...+80 °C, as well as relative air humidity from 0...100 % r.H.

A digital, long-term stable sensor used as measuring element for relative air humidity and temperature guarantees exact measurement results. The Modbus can be used to retrieve the following parameters: Temperature [°C], relative humidity [% r.H.], air quality (VOC) [%], carbon dioxide (CO_2) [ppm] and atmospheric pressure [hPa].

The CO_2 content of the air is measured using an optical NDIR sensor (non-dispersive infra-red technology). The detection range of the sensors is calibrated for standard applications such as monitoring residential rooms and conference rooms. Room ventilation on an as-needed basis, improved well-being and customer benefit, increased comfort as well as reduced operating costs through energy conservation are just some of the benefits of employing the AERASGARD® CO_2 sensor.

The explanations above demonstrate that there are applications for CO_2 measurements, for VOC measurements, but from our perspective, above all, for a combination of both measurands. The crucial factor in this respect is that both of these measurands are not convertible into each other and derivations to or from one another cannot be made. An NDIR CO_2 measuring instrument measures selectively and cannot detect any VOC; a VOC mixed gas sensor cannot recognize CO_2 molecules.

TECHNICAL DATA

Voltage supply:	24 V AC / DC (± 10 %)
Power consumption:	< 4.8 W / 24 V DC typical; < 6.8 VA / 24 V AC typical; peak current 200 mA
Data points:	Temperature [°C], relative humidity [% r.H.], air quality (VOC) [%], carbon dioxide (CO_2) [ppm], atmospheric pressure [hPa]
HUMIDITY	
Sensors:	**digital humidity sensor with integrated temperature sensor,** low hysteresis, high long-term stability
Sensor protection:	**plastic** sinter filter, Ø 16 mm, L = 35 mm, exchangeable (optional **metal** sinter filter, Ø 16 mm, L = 32 mm)
Measuring range, humidity:	0...100 % r. H.
Operating range, humidity:	0...95 % r. H. (without dew formation)
Deviation of humidity:	typically **± 2.0** % (20...80 % r. H.) at +25 °C, otherwise ± 3.0 %
TEMPERATURE	
Measuring range, temperature:	–35...+80 °C
Operating range, temperature:	–10...+60 °C
Deviation, temperature:	typically ± 0.4 K at 25 °C
AIR QUALITY (VOC)	
Sensor, VOC:	VOC sensor (metal oxide) **with automatic calibration** (VOC = volatile organic compounds)
Measuring range, VOC:	0...100 % air quality; referred to calibrating gas; **multi-range switching** VOC sensitivity low, medium, high
Measuring accuracy, VOC:	± 20 % of final value (referred to calibrating gas)
Service life:	> 60 months (under normal load conditions)
CARBON DIOXIDE (CO_2)	
Sensor, CO_2:	optical NDIR sensor (non-dispersive infra-red technology) including atmospheric pressure compensation (up to 1100 mbar) **with automatic and manual calibration**
Measuring range, CO_2:	0...5000 ppm
Measuring accuracy, CO_2:	typically ± 30 ppm ± 3 % of measured value
Temperature dependence, CO_2:	± 5 ppm / °C or ± 0.5 % of measured value / °C (whichever is higher)
Pressure dependence:	± 0.13 % / mm Hg
Long-term stability:	< 2 % in 15 years
Gas exchange:	by diffusion (continued on next page!)

Display screen (cyclic) **Modbus Tyr 2**



Temperature



Humidity



Air quality (VOC)



Carbon dioxide (CO_2)

Display screen (static) **Modbus Tyr 2**



Carbon dioxide (CO_2)



Atmospheric pressure

Programmable display screen **Modbus Tyr 2**

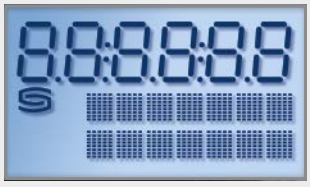
Programmable

AERASGARD® ACO_2 / ALQ - CO_2 - Modbus
AERASGARD® AFTM - (LQ) - CO_2 - Modbus

Multifunctional on-wall sensors and measuring transducers, for humidity, temperature, CO_2 content and air quality (VOC), calibratable, with Modbus connection

Dimensional drawing

AFTM - LQ - CO_2 - Modbus
AFTM - CO_2 - Modbus

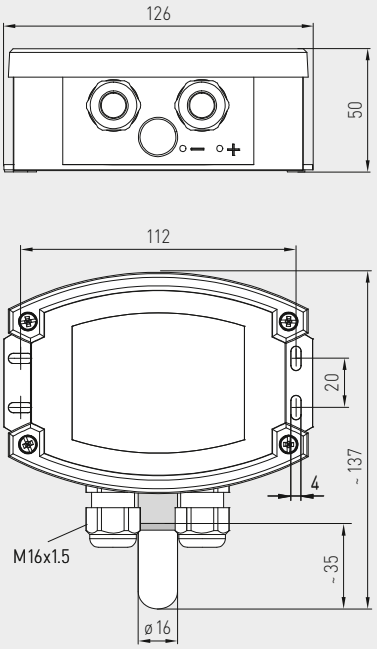

AFTM - LQ - CO_2 - Modbus
AFTM - CO_2 - Modbus
with plastic sinter filter (standard)



AFTM - LQ - CO_2 - Modbus
AFTM - CO_2 - Modbus
with display and plastic sinter filter (standard)





SF-K
Plastic sinter filter (standard)



SF-M
Metal sinter filter (optional)

TECHNICAL DATA (continued)

Bus protocol:	Modbus (RTU mode), address range 0...**247** selectable
Signal filtering:	4 s / 32 s
Ambient temperature:	–10...+60 °C
Response time:	< 2 minutes
Electrical connection:	0.2 - 1.5 mm², via push-in terminal
Enclosure:	plastic, UV-stabilised, material polyamide, 30 % glass-globe reinforced, with quick-locking screws (slotted / Phillips head combination), colour traffic white (similar to RAL 9016), enclosure cover for display is transparent!
Enclosure dimensions:	126 x 90 x 50 mm (Tyr 2)
Cable gland:	2x M 16 x 1.5; including strain relief, exchangeable
Protective tube:	**stainless steel V2A** (1.4301), Ø 16 mm, NL = 55 mm
Process connection:	by screws
Protection class:	III (according to EN 60 730)
Protection type:	IP 65 (according to EN 60 529)
Standards:	CE conformity, electromagnetic compatibility according to EN 61 326, EMC Directive 2014 / 30 / EU
Optional:	**Display with illumination,** three-line, cutout approx. 70 x 40 mm (W x H), for displaying actual humidity, actual temperature, air quality and the actual CO_2 content (cyclic) or a selectable parameter (static) or an individually programmable display value (The Modbus interface allows the display to be individually configured in the 7-segment area and in the dot-matrix area.)
ACCESSORIES	see table

AERASGARD® ACO_2 / ALQ - CO_2 - Modbus
AERASGARD® AFTM - (LQ) - CO_2 - Modbus

Multifunctional on-wall sensors and measuring transducers, for humidity, temperature, CO_2 content and air quality (VOC), calibratable, with Modbus connection

S+S REGELTECHNIK

Dimensional drawing

ACO_2-Modbus
ALQ - CO_2-Modbus

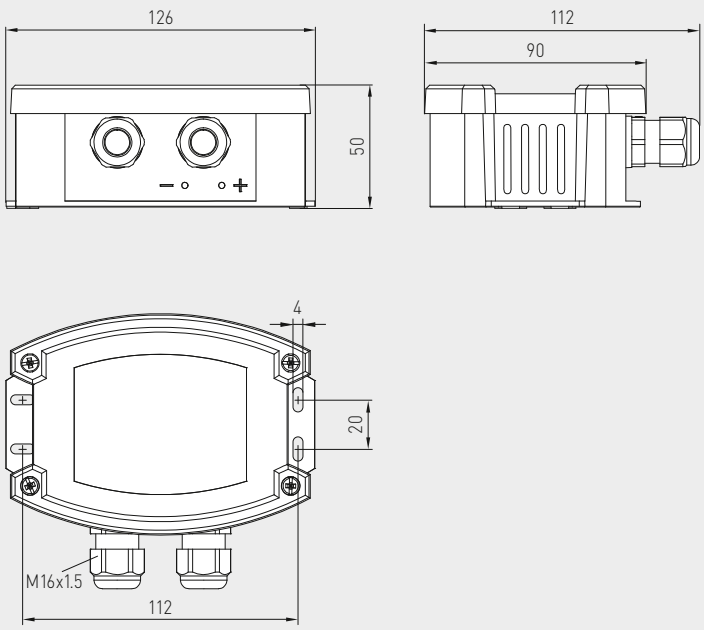

ACO_2-Modbus
ALQ - CO_2-Modbus





Dimensional drawing

AFTM - LQ - CO_2 - Modbus
AFTM - CO_2 - Modbus

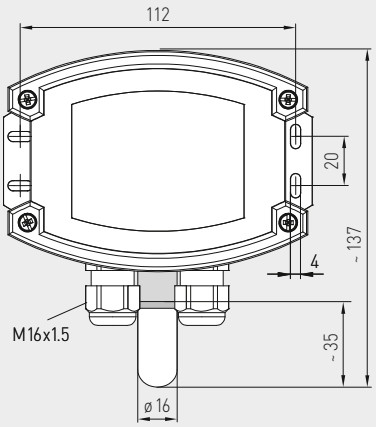

SF-K
plastic sinter filter
(standard)



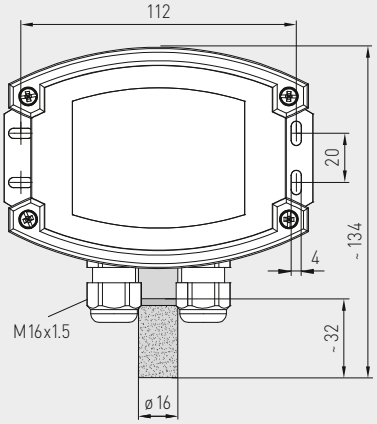

SF-M
metal sinter filter
(optional)



AFTM - LQ - CO_2 - Modbus
AFTM - CO_2 - Modbus
with metal sinter filter
(optional)





AERASGARD® ACO_2 / ALQ-CO_2-Modbus
AERASGARD® AFTM-(LQ)-CO_2-Modbus

Multifunctional on-wall sensors and measuring transducers, for humidity, temperature, CO_2 content and air quality (VOC), calibratable, with Modbus connection

Schematic diagram **AFTM-LQ-CO_2-Modbus**

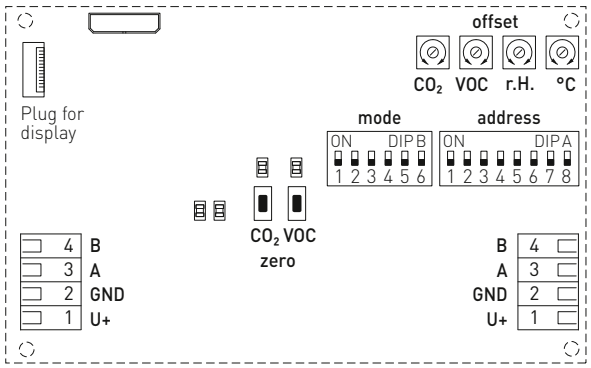

DIP A: Bus address
DIP B: Bus parameters (Baud rate, parity ...)
Telegram indicator Reception (LED green) Error (LED red)
Offset correction
LED (internal status)
Reset button

AFTM-LQ-CO_2-Modbus
with display

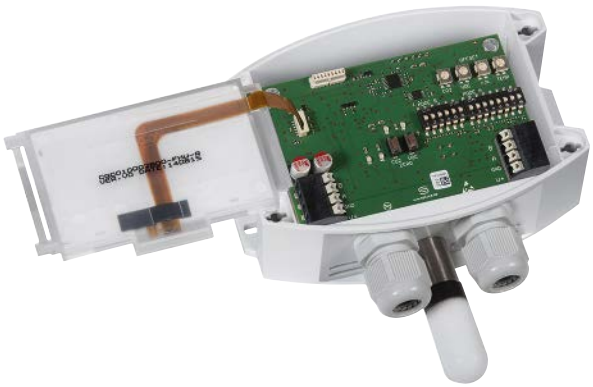



AERASGARD® ACO_2-Modbus	On-wall sensor for CO_2 content, *Deluxe*
AERASGARD® ALQ-CO_2-Modbus	On-wall sensor for CO_2 content and air quality (VOC), *Deluxe*
AERASGARD® AFTM-CO_2-Modbus	Multifunctional on-wall sensor for humidity, temperature and CO_2 content, *Deluxe*
AERASGARD® AFTM-LQ-CO_2-Modbus	Multifunctional on-wall sensor for humidity, temperature, CO_2 content and air quality (VOC), *Deluxe*

Type / WG02	Measuring Range Humidity	Temperature	CO_2	VOC	Display	Item No.
ACO_2-Modbus						
ACO2 MODBUS	–	–	5000 ppm	–		1501-7110-6001-200
ACO2 MODBUS LCD	–	–	5000 ppm	–	■	1501-7110-6071-200
ALQ-CO_2-Modbus						
ALQ-CO2 MODBUS	–	–	5000 ppm	0...100 %		1501-7111-6001-200
ALQ-CO2 MODBUS LCD	–	–	5000 ppm	0...100 %	■	1501-7111-6071-200
AFTM-CO_2-Modbus						
AFTM-CO2 MODBUS	0...100 % r.H.	–35...+80 °C	5000 ppm	–		1501-7116-6001-200
AFTM-CO2 MODBUS LCD	0...100 % r.H.	–35...+80 °C	5000 ppm	–	■	1501-7116-6071-200
AFTM-LQ-CO_2-Modbus						
AFTM-LQ-CO2 MODBUS	0...100 % r.H.	–35...+80 °C	5000 ppm	0...100 %		1501-7118-6001-200
AFTM-LQ-CO2 MODBUS LCD	0...100 % r.H.	–35...+80 °C	5000 ppm	0...100 %	■	1501-7118-6071-200
Note:	This unit **must not** be used as safety-relevant device!					

ACCESSORIES		
KA-2	**Modbus communication adapter** with USB/RS485 interface for system connection or/and as an active bus termination resistance	on request
SF-M	**Metal** sinter filter, Ø 16 mm, L = 32 mm, exchangeable stainless steel **V4A** (1.4404)	7000-0050-2200-100
WS-03	**Weather and sun protection hood**, 200 x 180 x 150 mm, stainless steel **V2A** (1.4301)	7100-0040-6000-000
	For further information see last chapter!	

AERASGARD® KCO_2 / KLQ - CO_2 - Modbus
AERASGARD® KFTM - (LQ) - CO_2 - Modbus

Multifunctional duct sensors and measuring transducers incl. mounting flange, for humidity, temperature, CO_2 content and air quality (VOC), calibratable, with Modbus connection

S+S REGELTECHNIK

Patented quality product (patent no. DE 10 2014 010 719.1)

The maintenance-free, microprocessor-controlled **AER**ASGARD® **AFTM - LQ - CO_2 - Modbus** and **KCO_2 / KLQ - CO_2 / KFTM - CO_2 - Modbus** with Modbus connection, with /without optional display, is designed for duct installation and is used to monitor all measurands of relevance to the climate inside a room. These are the measurands air humidity, temperature, CO_2 concentration as well as air quality (VOC). By using a single device to monitor all four measurands, it is possible to effectively monitor and regulate the entire room climate. It measures CO_2 in the range of 0...5000 ppm, VOC at one of three selectable sensitivity levels LOW / MEDIUM / HIGH, temperatures in the range of –35...+80 °C, as well as relative air humidity from 0...100 % r.H.

A digital, long-term stable sensor used as measuring element for relative air humidity and temperature guarantees exact measurement results. The Modbus can be used to retrieve the following parameters: Temperature [°C], relative humidity [% r.H.], air quality (VOC) [%], carbon dioxide (CO_2) [ppm] and atmospheric pressure [hPa].

The CO_2 content of the air is measured using an optical NDIR sensor (non-dispersive infra-red technology). The detection range of the sensors is calibrated for standard applications such as monitoring residential rooms and conference rooms. Room ventilation on an as-needed basis, improved well-being and customer benefit, increased comfort as well as reduced operating costs through energy conservation are just some of the benefits of employing the AERASGARD® CO_2 sensor.

The explanations above demonstrate that there are applications for CO_2 measurements, for VOC measurements, but from our perspective, above all, for a combination of both measurands. The crucial factor in this respect is that both of these measurands are not convertible into each other and derivations to or from one another cannot be made. An NDIR CO_2 measuring instrument measures selectively and cannot detect any VOC; a VOC mixed gas sensor cannot recognize CO_2 molecules.

TECHNICAL DATA

Voltage supply:	24 V AC / DC (± 10 %)
Power consumption:	< 4.8 W / 24 V DC typical; < 6.8 VA / 24 V AC typical; peak current 200 mA
Data points:	Temperature [°C], relative humidity [% r.H.], air quality (VOC) [%], carbon dioxide (CO_2) [ppm], atmospheric pressure [hPa]
HUMIDITY	
Sensors:	**digital humidity sensor with integrated temperature sensor,** low hysteresis, high long-term stability
Sensor protection:	**plastic** sinter filter, Ø 16 mm, L = 35 mm, exchangeable (optional **metal** sinter filter, Ø 16 mm, L = 32 mm)
Measuring range, humidity:	0...100 % r. H.
Operating range, humidity:	0...95 % r. H. (without dew formation)
Deviation of humidity:	typically **± 2.0** % (20...80 % r. H.) at +25 °C, otherwise ± 3.0 %
TEMPERATURE	
Measuring range, temperature:	–35...+80 °C
Operating range, temperature:	–10...+60 °C
Deviation, temperature:	typically ± 0.2 K at 25 °C
AIR QUALITY (VOC)	
Sensor, VOC:	VOC sensor (metal oxide) **with automatic calibration** (VOC = volatile organic compounds)
Measuring range, VOC:	0...100 % air quality; referred to calibrating gas; **multi-range switching** VOC sensitivity low, medium, high
Measuring accuracy, VOC:	± 20 % of final value (referred to calibrating gas)
Service life:	> 60 months (under normal load conditions)
CARBON DIOXIDE (CO_2)	
Sensor, CO_2:	optical NDIR sensor (non-dispersive infra-red technology) including atmospheric pressure compensation (up to 1100 mbar) **with automatic and manual calibration**
Measuring range, CO_2:	0...5000 ppm
Measuring accuracy, CO_2:	typically ± 30 ppm ± 3 % of measured value
Temperature dependence, CO_2:	± 5 ppm / °C or ± 0.5 % of measured value / °C (whichever is higher)
Pressure dependence:	± 0.13 % / mm Hg
Long-term stability:	< 2 % in 15 years
Gas exchange:	by diffusion (continued on next page!)

Display screen (cyclic) **Modbus Tyr 2**



Temperature



Humidity



Air quality (VOC)



Carbon dioxide (CO_2)

Display screen (static) **Modbus Tyr 2**



Carbon dioxide (CO_2)



Atmospheric pressure

Programmable display screen **Modbus Tyr 2**

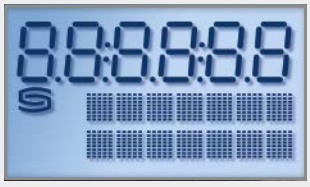
Programmable display screen

AERASGARD® KCO_2 / KLQ - CO_2 - Modbus
AERASGARD® KFTM - (LQ) - CO_2 - Modbus

Multifunctional duct sensors and measuring transducers incl. mounting flange, for humidity, temperature, CO_2 content and air quality (VOC), calibratable, with Modbus connection

Mounting diagram

KCO_2 - Modbus
KLQ - CO_2 - Modbus
KFTM - CO_2 - Modbus
KFTM - LQ - CO_2 - Modbus

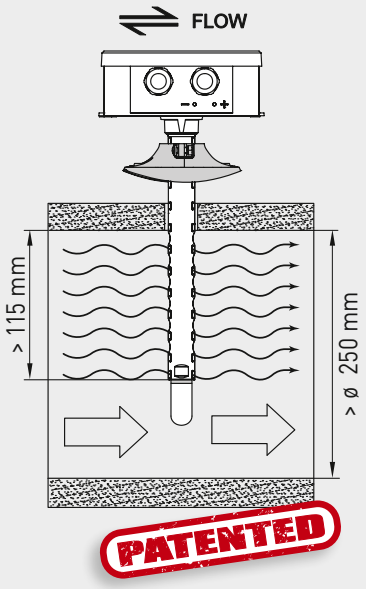

KFTM - CO_2 - Modbus
KFTM - LQ - CO_2 - Modbus
with plastic sinter filter (standard)





MFT - 20 - K
Mounting flange, plastic

KFTM - CO_2 - Modbus
KFTM - LQ - CO_2 - Modbus
with display and plastic sinter filter (standard)





SF-K
Plastic sinter filter (standard)



SF-M
Metal sinter filter (optional)

TECHNICAL DATA (continued)

Bus protocol:	Modbus (RTU mode), address range 0...**247** selectable
Signal filtering:	4 s / 32 s
Ambient temperature:	–10...+60 °C
Response time:	< 2 minutes, minimal flow velocity 0.3 m/s (air)
Electrical connection:	0.2 - 1.5 mm², ia push-in terminal
Enclosure:	plastic, UV-stabilised, material polyamide, 30 % glass-globe reinforced, with quick-locking screws (slotted / Phillips head combination), colour traffic white (similar to RAL 9016), enclosure cover for display is transparent!
Enclosure dimensions:	126 x 90 x 50 mm (Tyr 2)
Cable gland:	2x M 16 x 1.5; including strain relief, exchangeable
Protective tube:	**PLEUROFORM**™, material polyamide (PA6), with torsion protection, Ø 20 mm, v_{max} = 30 m/s (air) without filter: NL = 202.5 mm / with plastic filter: NL = 235 mm (optional with metal filter: NL = 227 mm)
Process connection:	via mounting flange made of plastic (included in scope of delivery)
Protection class:	III (according to EN 60 730)
Protection type:	IP 65 (according to EN 60 529) enclosure only! (PLEUROFORM IP 30)
Standards:	CE conformity, electromagnetic compatibility according to EN 61 326, EMC Directive 2014 / 30 / EU
Optional:	**Display with illumination,** three-line, cutout approx. 70 x 40 mm (W x H), for displaying actual humidity, actual temperature, air quality and the actual CO_2 content (cyclic) or a selectable parameter (static) or an individually programmable display value (The Modbus interface allows the display to be individually configured in the 7-segment area and in the dot-matrix area.)
ACCESSORIES	see table

AERASGARD® KCO_2 / KLQ - CO_2 - Modbus
AERASGARD® KFTM - (LQ) - CO_2 - Modbus

Multifunctional duct sensors and measuring transducers incl. mounting flange, for humidity, temperature, CO_2 content and air quality (VOC), calibratable, with Modbus connection

S+S REGELTECHNIK

Dimensional drawing

KCO_2-Modbus
KLQ - CO_2-Modbus

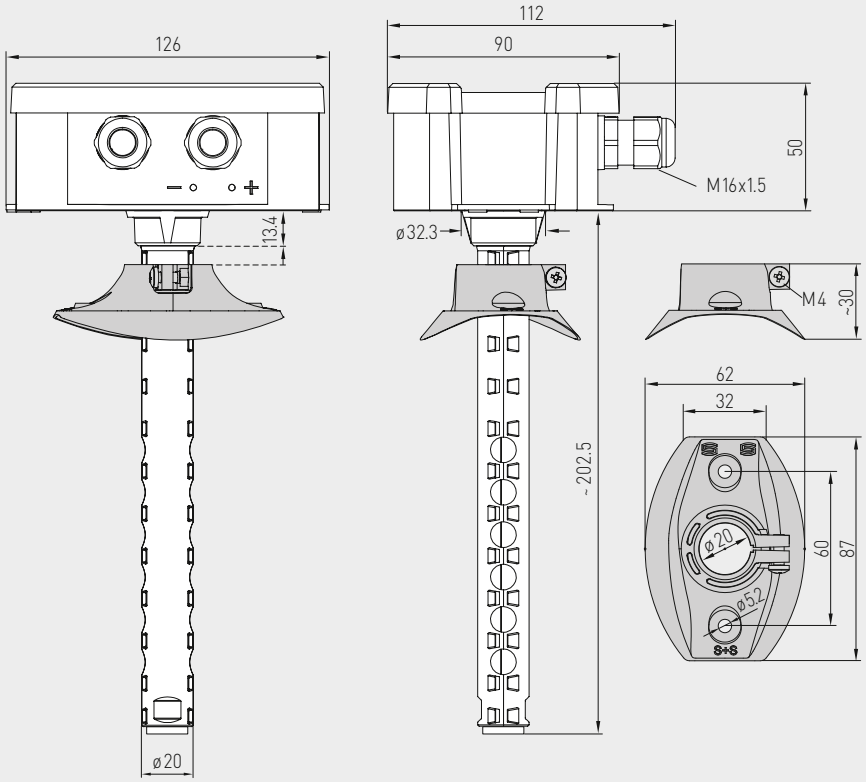

KCO_2-Modbus
KLQ - CO_2-Modbus



Dimensional drawing

KFTM - CO_2 - Modbus
KFTM - LQ - CO_2 - Modbus

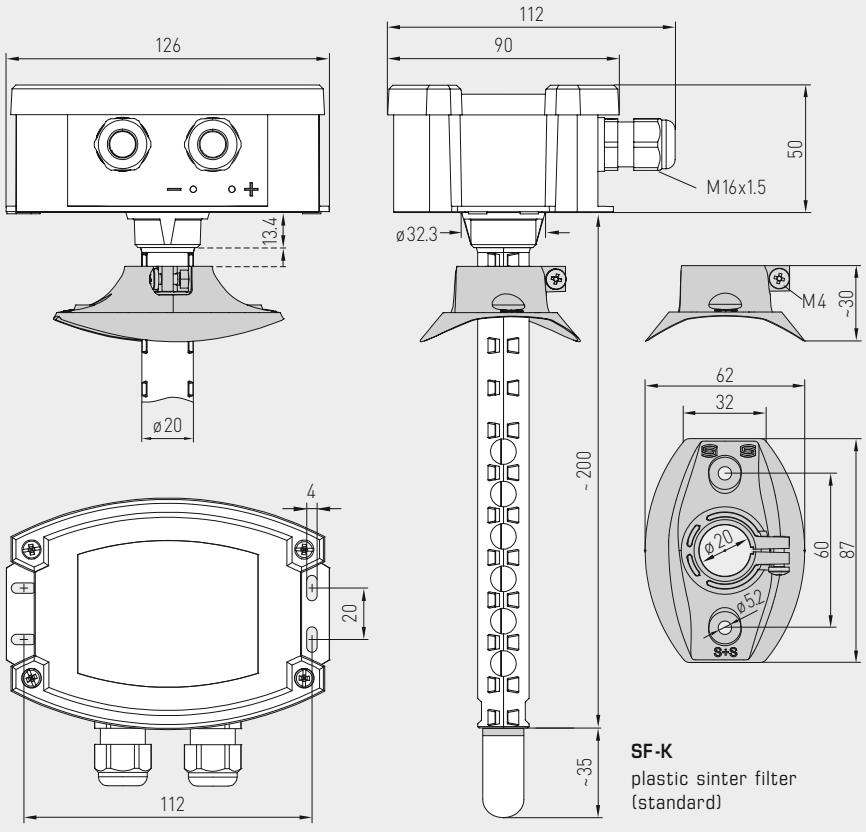

SF-K
plastic sinter filter
(standard)

KFTM - CO_2 - Modbus
KFTM - LQ - CO_2 - Modbus



SF-M
metal sinter filter
(optional)

AERASGARD® KCO_2 / KLQ-CO_2-Modbus
AERASGARD® KFTM-(LQ)-CO_2-Modbus

Multifunctional duct sensors and measuring transducers incl. mounting flange, for humidity, temperature, CO_2 content and air quality (VOC), calibratable, with Modbus connection

Schematic diagram **KFTM-LQ-CO_2-Modbus**

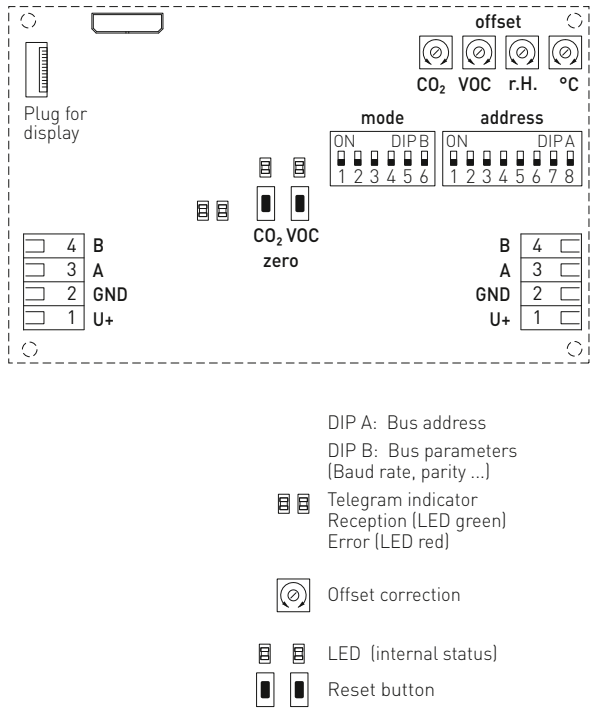

KFTM-LQ-CO_2-Modbus
with display



AERASGARD® KCO_2-Modbus	Duct sensor for CO_2 content, *Deluxe*
AERASGARD® KLQ-CO_2-Modbus	Duct sensor for air quality (VOC) and CO_2 content, *Deluxe*
AERASGARD® KFTM-CO_2-Modbus	Multifunctional duct sensor for humidity, temperature and CO_2 content, *Deluxe*
AERASGARD® KFTM-LQ-CO_2-Modbus	Multifunctional duct sensor for humidity, temperature, air quality (VOC) and CO_2 content, *Deluxe*

Type / WG02	Measuring Range Humidity	Temperature	CO_2	VOC	Display	Item No.
KCO_2-Modbus						
KCO2 MODBUS	–	–	5000 ppm	–		1501-8110-6001-200
KCO2 MODBUS LCD	–	–	5000 ppm	–	■	1501-8110-6071-200
KLQ-CO_2-Modbus						
KLQ-CO2 MODBUS	–	–	5000 ppm	0...100 %		1501-8111-6001-200
KLQ-CO2 MODBUS LCD	–	–	5000 ppm	0...100 %	■	1501-8111-6071-200
KFTM-CO_2-Modbus						
KFTM-CO2 MODBUS	0...100 % r.H.	–35...+80 °C	5000 ppm	–		1501-8116-6001-200
KFTM-CO2 MODBUS LCD	0...100 % r.H.	–35...+80 °C	5000 ppm	–	■	1501-8116-6071-200
KFTM-LQ-CO_2-Modbus						
KFTM-LQ-CO2 MODBUS	0...100 % r.H.	–35...+80 °C	5000 ppm	0...100 %		1501-8118-6001-200
KFTM-LQ-CO2 MODBUS LCD	0...100 % r.H.	–35...+80 °C	5000 ppm	0...100 %	■	1501-8118-6071-200
Note:	This unit **must not** be used as safety-relevant device!					
ACCESSORIES						
KA-2	**Modbus communication adapter** with USB/RS485 interface for system connection or/and as an active bus termination resistance					on request
SF-M	**Metal** sinter filter, Ø 16 mm, L = 32 mm, exchangeable, stainless steel **V4A** (1.4404)					7000-0050-2200-100
MFT-20-K	**Mounting flange,** plastic (included in the scope of delivery)					7000-0031-0000-000
	For further information, see last chapter Accessories!					



Temperature

PASSIVE SENSORS

Our passive **THERM**ASGARD® temperature sensors have a proven fit in countless applications across all areas of temperature measurement. Technology for best measuring results you can rely on. Available in various different models and individual versions to meet your precise requirements.

APPLICATION RANGE

> Hospitals, museums, schools, hotels and administration buildings
> Power plants and district heating facilities
> Pharmaceutical and food industry
> Production plants
> Heating systems



THERMASGARD®

098 – 171

Room sensors

DTF	In-ceiling temperature sensor	**121**
RTF	Room temperature sensor, on-wall	**102**
RTF 1	Room temperature sensor, on-wall	**106**
FSTF	Room temperature sensor, in-wall	**112**
FSTF 1	Room temperature sensor, in-wall	**115**
RPTF 1	Pendulum room temperature sensor	**168**
RPTF 2	Pendulum room temperature sensor	**169**
RSTF	Room radiation temperature sensor	**171**
RTF-xx	Room control units, on-wall	**107**
FSTF-xx	Room control units, in-wall	**116**

Outdoor sensors

ATF 01	Outside temperature sensor	**122**
ATF 1	Outside temperature sensor	**123**
ATF 2	Outside temperature sensor	**125**
ASTF	On-wall radiation temperature sensor	**170**

Cable sensors, surface contact sensors

HTF	Sleeve temperature sensor	**158**
OFTF	Surface temperature sensor	**163**
ALTF 1	Surface-contact temperature sensor	**164**
ALTF 02	Surface-contact temperature sensor	**166**
ALTF 2	Surface-contact temperature sensor	**167**

Duct sensors, immersion sensors, screw-in sensors

TF 43	Immersion / duct / screw-in sensor	**130**
TF 65	Immersion / duct / screw-in sensor	**128**
TF 54	Immersion / duct / screw-in sensor	**144**
TF 43-F	Immersion / duct / screw-in sensor with cable	**135**
TF 65-F	Immersion / duct / screw-in sensor with cable	**135**
MWTF	Mean value temperature sensor	**139**
ETF 6	Screw-in sensor with neck tube	**150**
ETF 7	Screw-in sensor, fast-acting	**141**
RGTF 2	Screw-in / smoke gas temperature sensor	**155**
RGTF 1	Duct / smoke gas temperature sensor	**153**
HTF	Screw-in / duct / immersion sensor with cable	**160**

Temperature

MADE IN GERMANY

THERMASGARD® & **THERM**ASREG®
Multifunctional sensor technology for heat and cold

Broad Spectrum

All our temperature measuring transducers are designed to be multifunctional.
This reduces the diversity of types and expands their possible applications. Thanks to microprocessor technology, almost any measuring range can be represented, including custom specifications. Multi-range switching is selectable via DIP switches.

Optimum Precision

The devices are tested according to the latest criteria and are calibrated and 100 % tested in our climatic exposure test cabinets. Each sensor is precisely re-adjustable using offset potentiometers. Take advantage of our experience, our development, manufacturing and product know-how and order these products directly from the manufacturer.

Approved Safety

The **THERM**ASGARD® **1101-I** with current output (Test No. 69871-01939-1) and the **THERM**ASGARD® **1101-U** with voltage output (Test No. 69871-01940-1) are tested and certified according to DIN EN 61326-1:2006 and EN 61326-2-3:2006 by TÜV SÜD.

THERMASREG® **ETR** and **KTR** are tested and certified to DIN EN 14597:2015-01.

DIN tested/certified devices

RoHS conforming materials

ESD compliant manufacturing

CE compliance tested by external laboratories

Certified Quality

Our development and production in Nuremberg/Germany is certified by TÜV Thüringen according to DIN EN ISO 9001:2015.

GOST certificates

EAC certified

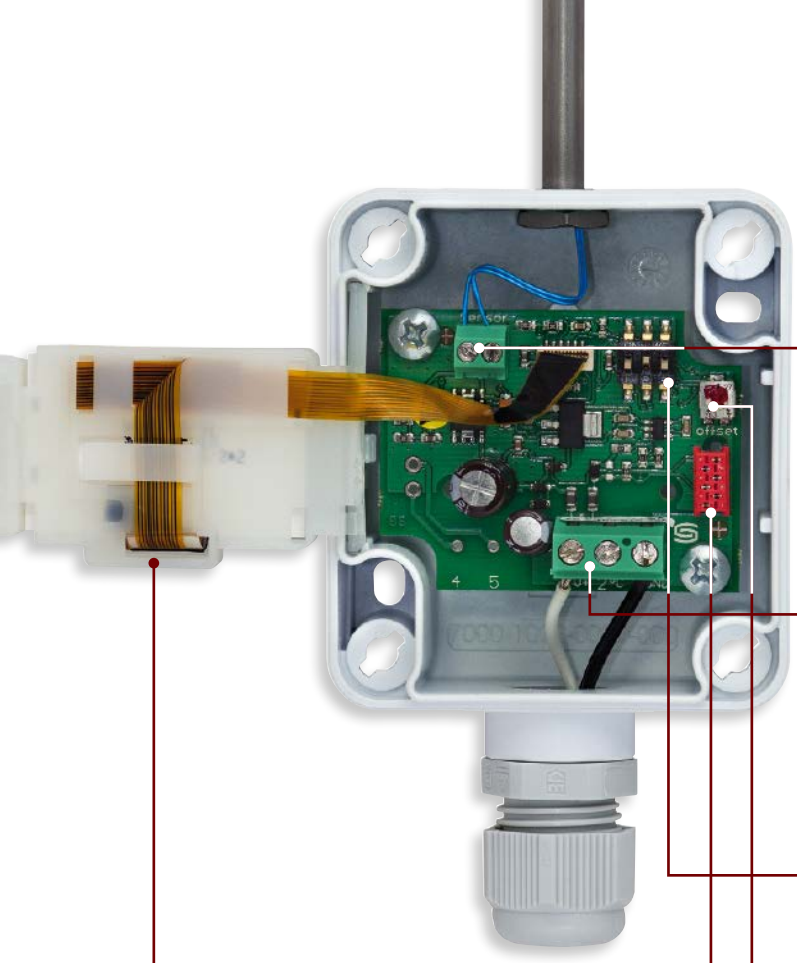

2



Sensors

Internal sensors / external sensors

3



Screw Terminals

Active output signals 0 -10 V, 4...20 mA or switched as well as passive outputs (e.g. Pt1000, Ni1000 etc.)

4

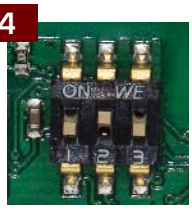

DIP Switches

For multi-range toggling and setting of measuring ranges

1



Illuminated Display

With backlighting as well as display of range violation, sensor breakage, sensor short circuit and physical units

5



Offset Potentiometer

For fine adjustment (zero point offset) and readjustment upon recalibration

6

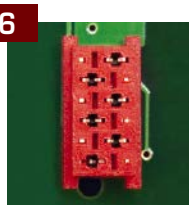

Quality Assurance

Calibration and balancing are done by means of the bus system in climate cabinets



Configuration variants of room operating units

Room temperature sensors and measuring transducers, on-wall, device series Baldur

Enclosure temperature sensors are electric contact thermometers for measuring temperatures in the gases (air) surrounding them on all sides. Room temperature sensors / measuring transducers are used for measuring air temperature (in non-precipitating air), for changing setpoint values, for presence detection, or as operating panels with push-buttons, switches, potentiometers, status indicators (LEDs) in residential, working, office and business facilities as well as in the industrial sector.

Here are some design and configuration examples of variants of the new Baldur series devices that can be individually customized ...

DEVICE SERIES

Baldur 1 (85 x 85 x 27 mm)
Baldur 2 (98 x 98 x 33 mm)

Baldur lying



Baldur 1
without operating elements



Baldur 1
with display



Baldur 1
with display and potentiometer



Baldur 1 with potentiometer, push-button, and LED



Baldur 1 with potentiometer and rocker switch



Baldur 1 with potentiometer and push-buttons



Baldur 1 with potentiometer and LEDs



Baldur 1 with potentiometer and LEDs



Baldur 1 with potentiometer and LEDs



Baldur 2 without operating elements



Baldur 2 with display



Baldur 2 with display, potentiometer, and LEDs



Baldur 2 with LEDs and push-buttons



Baldur 2 with LEDs and push-buttons



Baldur 2 with potentiometer, turn switch, and LEDs



Baldur 2 with potentiometer, turn switch, and LEDs



Baldur 2 with potentiometer, push-buttons, LEDs, and rocker switch



Baldur 2 with potentiometer, turn switch, and LEDs



Baldur 2 with potentiometer and turn switch



Baldur 2 with potentiometer, turn switch, LEDs, and push-buttons



Baldur 2 with potentiometer, turn switch, LEDs, and push-buttons



Room temperature sensors and measuring transducers, on-wall, general

S+S REGELTECHNIK

TECHNICAL DATA

Measuring ranges:	–30...+70 °C (passive sensors) and 0...+50 °C (for U-variant)
Sensor:	for types, see table
Potentiometer:	standard 1kΩ, max. 0.1 W other ratings optional on request, e. g. 100 Ω, 2.5 kΩ, 5 kΩ, 10 kΩ, (optional potentiometer 0...10 V, linear), with angle of rotation limiter
Turn switch:	max. 24 V AC / DC, max. 130 mA, up to 5 steps (0, Auto, I, II, III), with angle of rotation limiter
Rocker switch:	max. 24 V AC / DC, max. 130 mA
Push-buttons:	normally open contact, max. 24 V DC, max. 10 mA
LEDs:	max. 24 V DC (optional max. 24 V AC), standard green (optional red, yellow, or two-colour)
Enclosure:	plastic, ABS, pure white (similar to RAL 9010), (optional stainless steel **V2A** (1.4301)
Dimensions:	85 x 85 x 27 mm (Baldur 1) Standard 98 x 98 x 33 mm (Baldur 2) 75 x 75 x 25 mm (stainless steel **V2A** (1.4301)
Installation:	wall mounting or on in-wall flush box Ø 55 mm, base with 4-hole for mounting on vertically or horizontally installed in-wall flush boxes for cable entry from the back, with predetermined breaking point for on-wall cable entry from top / bottom in case of plain on-wall installation
Electrical connection:	0.14 - 1.5 mm² via terminal screws, on safety extra-low voltage max. 24 V DC only
Humidity:	max. 90 % r. H., non-precipitating air
Protection class:	III (according to EN 60 730)
Protection type:	IP 30 (according to EN 60 529)
Lettering:	standard is swelling arrow with centre position, unfilled (optional special printing – see last chapter "Accessories")
ACCESSORIES	see last chapter

RTF
(Baldur 1)
without operating elements



RTF
(Baldur 2)
with potentiometer
and turn switch



Potentiometer and
turn switch with
limited angle of rotation



Dimensional drawing

Enclosure **Baldur 1**
(only one potentiometer possible)

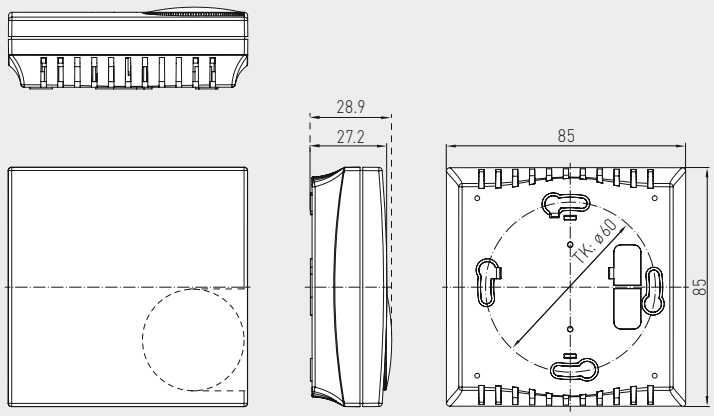

RTF
(Baldur 1)
with potentiometer



Dimensional drawing

Enclosure **Baldur 2**
(one or two potentiometers possible)

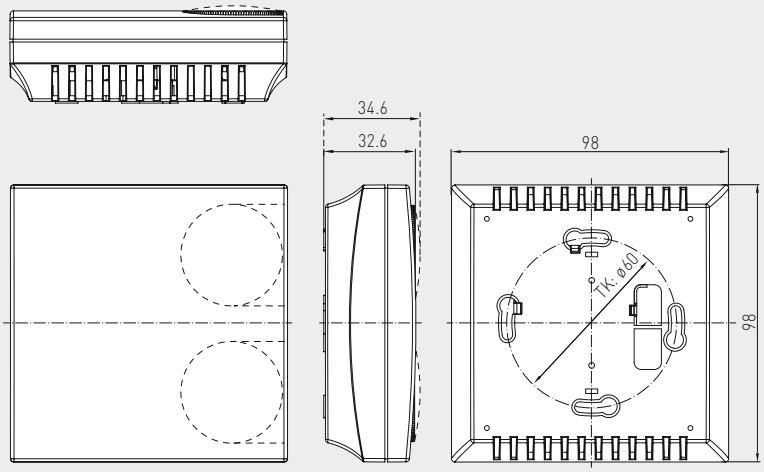

RTF
(Baldur 2)
with potentiometer



Dimensional drawing

Enclosure stainless steel

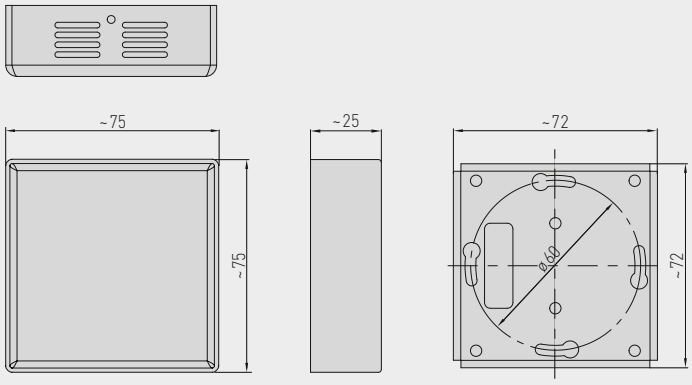

RTF
(stainless steel)



S+S REGELTECHNIK

Room temperature sensors and measuring transducers, on-wall, different versions

Room temperature sensor **THERM**ASGARD® **RTF 1** with passive output, in an elegant enclosure made of plastic, with snap-on lid, base with 4-hole attachment for installation on vertically or horizontally installed in-wall flush boxes, with predetermined breaking point for on-wall cable entry, or in enclosures made of stainless steel (top and bottom part are of stainless steel, the lid is screwed on), vandal-proof version e.g. for schools, military barracks, and public buildings. This residential room temperature sensor is used to detect / display temperatures in closed dry rooms, in apartments, in cinemas, supermarkets, storage rooms, office and business facilities.



RTF 1
(Baldur 1)



RTF 1
(stainless steel)

TECHNICAL DATA

Measuring range:	–30...+70 °C
Sensor / output:	see table, passive
Connection type:	2-wire connection (4-wire connection on PT100 / PT1000A, optional on other sensors)
Testing current:	< 0.6 mA (Pt1000) < 1.0 mA (Pt100) < 0.3 mA (Ni1000, Ni1000 TK5000) < 2.0 mW (NTC xx) < 2.0 mA (KTY 81-210) 400 µA...5 mA (LM235Z)
Process connection:	by screws
Enclosure:	plastic, material ABS, colour pure white (similar to RAL 9010), optional stainless steel **V2A** (1.4301)
Dimensions:	85 x 85 x 27 mm (Baldur 1) Standard 98 x 98 x 33 mm (Baldur 2) 75 x 75 x 25 mm (stainless steel **V2A** (1.4301)
Installation:	wall mounting or on in-wall flush box Ø 55 mm, base with 4-hole for mounting on vertically or horizontally installed in-wall flush boxes for cable entry from the back, with predetermined breaking point for on-wall cable entry from top / bottom in case of plain on-wall installation
Electrical connection:	0.14 - 1.5 mm² via terminal screws, secured against loss due to unscrewing, on safety extra-low voltage max. 24 V DC only
Humidity:	max. 90 % r. H., non-precipitating air
Protection class:	III (according to EN 60 730)
Protection type:	IP 30 (according to EN 60 529)
ACCESSORIES	see last chapter

1x two-wire connection
standard

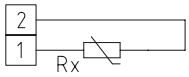

1x two-wire connection
LM 235 Z (KP 10)

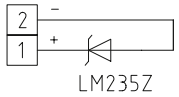

1x four-wire connection
(optional)

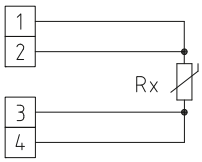



THERMASGARD® RTF 1 Room temperature sensors (Standard)

Type / WG03	Sensor / Output	Item No.
RTF1 xx	**passive**	**IP 30** (–30...+70 °C)
RTF1 PT100	Pt100 (according to DIN EN 60 751, class B)	1101-40A0-1003-000
RTF1 PT1000	Pt1000 (according to DIN EN 60 751, class B)	1101-40A0-5000-000
RTF1 PT1000A	Pt1000 (according to VDI / VDE 3512, class A-TGA)	1101-40A0-6003-000
RTF1 NI1000	Ni1000 (according to DIN EN 43 760, class B, TCR = 6180 ppm / K)	1101-40A0-9000-000
RTF1 NITK	Ni1000 TK5000 (TCR = 5000 ppm / K), LG - Ni1000	1101-40A1-0000-000
RTF1 LM235Z	LM235Z (TCR = 10 mV / K; 2.73 V at 0 °C), KP10	1101-40A2-1000-000
RTF1 NTC1,8K	NTC 1.8 K	1101-40A1-2000-000
RTF1 NTC10K	NTC 10K	1101-40A1-5000-000
RTF1 PRECON	NTC 10K Precon	1101-40A1-9000-000
RTF1 NTC20K	NTC 20K	1101-40A1-6000-000
RTF1 KTY81-210	KTY 81-210	1101-40A2-0000-000
Extra charge:	**Stainless steel enclosure** optional Other sensors optional	 on request



RTF xx T
(Baldur 1)

Version with sensor and
push-button (max. 24 V DC, max. 10 mA)

Connecting diagram **RTF xx T**

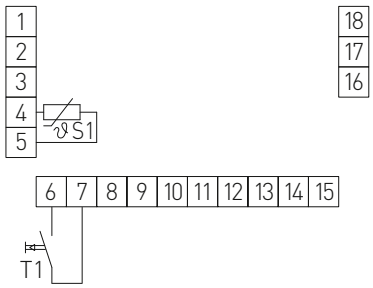

THERMASGARD® RTF xx T Room temperature sensors

Type /WG01	Sensor / Output	Item No.
RTF xx T	**passive**	**IP30** (–30...+70 °C)
RTF PT100 T	Pt100 (according to DIN EN 60751, class B)	1101-40A0-1617-000
RTF PT1000 T	Pt1000 (according to DIN EN 60751, class B)	1101-40A0-5617-000
RTF NI1000 T	Ni1000 (according to DIN EN 43760, class B, TCR = 6180 ppm / K)	1101-40A0-9617-000
RTF NITK T	Ni1000 TK5000 (TCR = 5000 ppm / K), LG-Ni1000	1101-40A1-0617-000
RTF LM235Z T	LM235Z (TCR = 10 mV / K; 2.73 V at 0 °C), KP10	1101-40A2-1617-000
RTF NTC1,8K T	NTC 1.8 K	1101-40A1-2617-000
RTF NTC10K T	NTC 10K	1101-40A1-5617-000
RTF PRECON T	NTC 10K Precon	1101-40A1-9617-000
RTF NTC20K T	NTC 20K	1101-40A1-6617-000
RTF KTY81-210 T	KTY 81-210	1101-40A2-0617-000



RTF xx LT
(Baldur 1)

Version with sensor, LED (green) and
push-button (max. 24 V DC, max. 10 mA)

Connecting diagram **RTF xx LT**

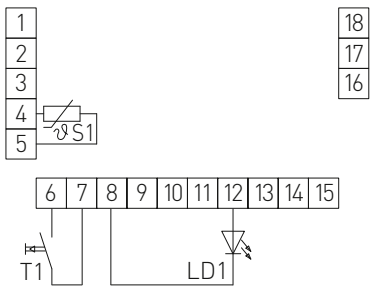

THERMASGARD® RTF xx LT Room temperature sensors

Type / WG01	Sensor / Output	Item No.
RTF xx LT	**passive**	**IP30** (–30...+70 °C)
RTF PT100 L T	Pt100 (according to DIN EN 60751, class B)	1101-40A0-1593-002
RTF PT1000 L T	Pt1000 (according to DIN EN 60751, class B)	1101-40A0-5593-002
RTF NI1000 L T	Ni1000 (according to DIN EN 43760, class B, TCR = 6180 ppm / K)	1101-40A0-9593-002
RTF NITK L T	Ni1000 TK5000 (TCR = 5000 ppm / K), LG-Ni1000	1101-40A1-0593-002
RTF LM235Z L T	LM235Z (TCR = 10 mV / K; 2.73 V at 0 °C), KP10	1101-40A2-1593-002
RTF NTC1,8K L T	NTC 1.8 K	1101-40A1-2593-002
RTF NTC10K L T	NTC 10K	1101-40A1-5593-002
RTF PRECON L T	NTC 10K Precon	1101-40A1-9593-002
RTF NTC20K L T	NTC 20K	1101-40A1-6593-002
RTF KTY81-210 L T	KTY 81-210	1101-40A2-0593-002

Room temperature sensors and measuring transducers, on-wall, different versions

S+S REGELTECHNIK







RTF xx P
RTF xx PU
RTM-U PU
(Baldur 1)

Version with sensor and potentiometer (1 kOhm, max. 0.1 W)

Connecting diagram **RTF xx P**

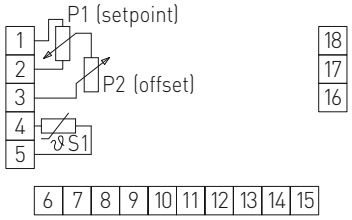

Circuit diagram **RTM-U PU Display**

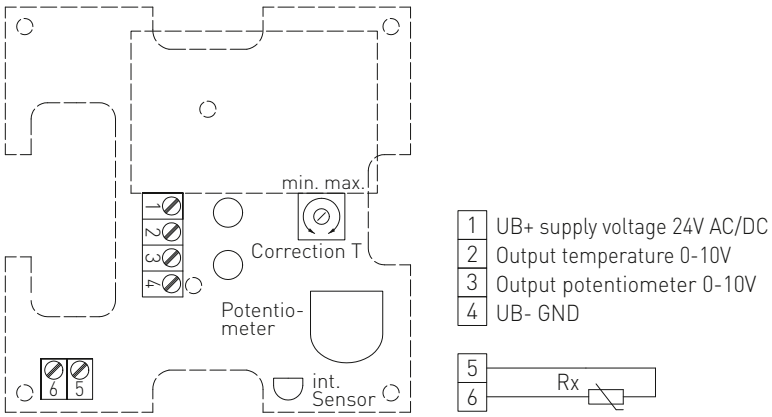

THERMASGARD® RTF xx P Room temperature sensors

Type / WG01	Sensor / Output	Display	Item No.
RTF xx P	**passive**		**IP30** (–30...+70 °C)
RTF PT100 P	Pt100 (according to DIN EN 60751, class B)		1101-40A0-1001-345
RTF PT1000 P	Pt1000 (according to DIN EN 60751, class B)		1101-40A0-5001-345
RTF NI1000 P	Ni1000 (according to DIN EN 43760, class B, TCR = 6180 ppm / K)		1101-40A0-9001-345
RTF NITK P	Ni1000 TK5000 (TCR = 5000 ppm / K), LG-Ni1000		1101-40A1-0001-345
RTF LM235Z P	LM235Z (TCR = 10 mV / K; 2.73 V at 0 °C), KP10		1101-40A2-1001-345
RTF NTC1,8K P	NTC 1.8 K		1101-40A1-2001-345
RTF NTC10K P	NTC 10K		1101-40A1-5001-345
RTF PRECON P	NTC 10K Precon		1101-40A1-9001-345
RTF NTC20K P	NTC 20K		1101-40A1-6001-345
RTF KTY81-210 P	KTY 81-210		1101-40A2-0001-345
RTF xx PU	**passive / active**		**IP30** (0...+50 °C)
RTF PT1000 PU	Pt1000 / 0-10 V (potentiometer)*		1101-40A0-5004-345
RTF PT1000 PU	Pt1000 / 0-10 V (potentiometer, central position)*		1101-40A0-5004-642
RTF PT1000 PU	Pt1000 / 0-10 V (potentiometer, marking points)*		1101-40A0-5004-050
RTM PU	**aktive**		**IP30** (0...+50 °C)
RTM-U PU	0-10 V (temperature and potentiometer)*		1101-41A1-0004-346
RTM-U PU DISPLAY	0-10 V (temperature and potentiometer)*	■	1101-41A1-1004-346
For special orders please specify:	**Ohm rating** of potentiometer (standard is 1kOhm; optional 100 Ohm, 2.5 kOhm, 5 kOhm, 10 kOhm, 0-10 V), **type of swelling arrow*** (standard = wedge-shaped, optional with central position or marking points) and differing specific **wiring requests**		



RTF xxP T
(Baldur 1)

Version with sensor,
potentiometer (1 kOhm, max. 0.1 W) and
push-button (max. 24 V DC, max. 10 mA)

Connecting diagram **RTF xx PT**

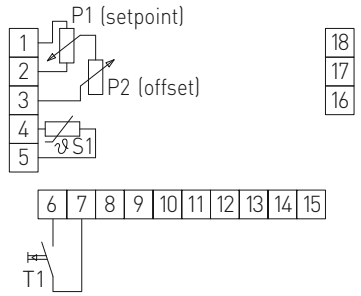

THERMASGARD® RTF xx PT Room temperature sensors

Type / WG01	Sensor / Output	Item No.
RTF xx PT	**passive**	**IP30** (–30...+70 °C)
RTF PT100 P T	Pt100 (according to DIN EN 60751, class B)	1101-40A0-1021-345
RTF PT1000 P T	Pt1000 (according to DIN EN 60751, class B)	1101-40A0-5021-345
RTF NI1000 P T	Ni1000 (according to DIN EN 43760, class B, TCR = 6180 ppm / K)	1101-40A0-9021-345
RTF NITK P T	Ni1000 TK5000 (TCR = 5000 ppm / K), LG-Ni1000	1101-40A1-0021-345
RTF LM235Z P T	LM235Z (TCR = 10 mV / K; 2.73 V at 0 °C), KP10	1101-40A2-1021-345
RTF NTC1,8K P T	NTC 1.8 K	1101-40A1-2021-345
RTF NTC10K P T	NTC 10K	1101-40A1-5021-345
RTF PRECON P T	NTC 10K Precon	1101-40A1-9021-345
RTF NTC20K P T	NTC 20K	1101-40A1-6021-345
RTF KTY81-210 P T	KTY 81-210	1101-40A2-0021-345
RTF xx PUT	**passive / active**	**IP30** (0...+50 °C)
RTF PT1000 PU T	Pt1000 / 0-10 V (potentiometer)	1101-40B0-5033-345



RTF xx PLT
(Baldur 1)

Version with sensor,
potentiometer (1 kOhm, max. 0.1 W),
LED (green) and
push-button (max. 24 V DC, max. 10 mA)

Connecting diagram **RTF xx PLT**

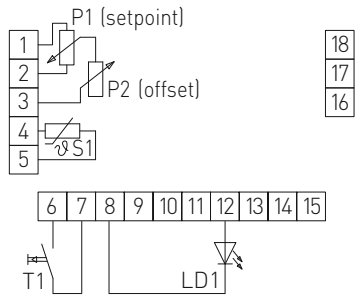

THERMASGARD® RTF xx PLT Room temperature sensors

Type / WG01	Sensor / Output	Item No..
RTF xx PLT	**passive**	**IP30** (–30...+70 °C)
RTF PT100 P L T	Pt100 (according to DIN EN 60751, class B)	1101-40A0-1663-347
RTF PT1000 P L T	Pt1000 (according to DIN EN 60751, class B)	1101-40A0-5663-347
RTF NI1000 P L T	Ni1000 (according to DIN EN 43760, class B, TCR = 6180 ppm / K)	1101-40A0-9663-347
RTF NITK P L T	Ni1000 TK5000 (TCR = 5000 ppm / K), LG-Ni1000	1101-40A1-0663-347
RTF LM235Z P L T	LM235Z (TCR = 10 mV / K; 2.73 V at 0 °C), KP10	1101-40A2-1663-347
RTF NTC1,8K P L T	NTC 1.8 K	1101-40A1-2663-347
RTF NTC10K P L T	NTC 10K	1101-40A1-5663-347
RTF PRECON P L T	NTC 10K Precon	1101-40A1-9663-347
RTF NTC20K P L T	NTC 20K	1101-40A1-6663-347
RTF KTY81-210 P L T	KTY 81-210	1101-40A2-0663-347
RTF xx PULT	**passive / active**	**IP30** (–30...+70 °C)
RTF PT1000 PU L T	Pt1000 / 0-10 V (potentiometer)	1101-40B0-5669-347

Room temperature sensors and measuring transducers, on-wall, different versions

S+S REGELTECHNIK



RTF xxP W
(Baldur 1)

Version with sensor,
potentiometer (1 kOhm, max. 0.1 W) and
rocker switch (max. 24 V AC/DC, max. 130 mA)

Connecting diagram **RTF xx PW**

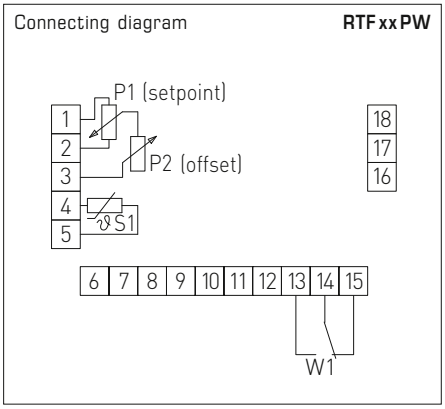

THERMASGARD® RTF xx PW Room temperature sensors

Type / WG01	Sensor / Output	Item No.
RTF xx PW	**passive**	**IP 30** (–30...+70 °C)
RTF PT100 P W	Pt100 (according to DIN EN 60 751, class B)	1101-40A0-1061-348
RTF PT1000 P W	Pt1000 (according to DIN EN 60 751, class B)	1101-40A0-5061-348
RTF NI1000 P W	Ni1000 (according to DIN EN 43 760, class B, TCR = 6180 ppm / K)	1101-40A0-9061-348
RTF NITK P W	Ni1000 TK5000 (TCR = 5000 ppm / K), LG-Ni1000	1101-40A1-0061-348
RTF LM235Z P W	LM235Z (TCR = 10 mV / K; 2.73 V at 0 °C), KP10	1101-40A2-1061-348
RTF NTC1,8K P W	NTC 1.8 K	1101-40A1-2061-348
RTF NTC10K P W	NTC 10K	1101-40A1-5061-348
RTF PRECON P W	NTC 10K Precon	1101-40A1-9061-348
RTF NTC20K P W	NTC 20K	1101-40A1-6061-348
RTF KTY81-210 P W	KTY 81-210	1101-40A2-0061-348
RTF xx PUW	**passive / active**	**IP 30** (0...+50 °C)
RTF PT1000 PU W2	Pt1000 / 0-10 V (potentiometer)	1101-40B0-5067-348



RTF xx PD
(Baldur 2)

Version with sensor,
potentiometer (1 kOhm, max. 0.1 W) and
and turn switch (max. 24 V AC/DC, max. 130 mA)

Connecting diagram **RTF xx PD**

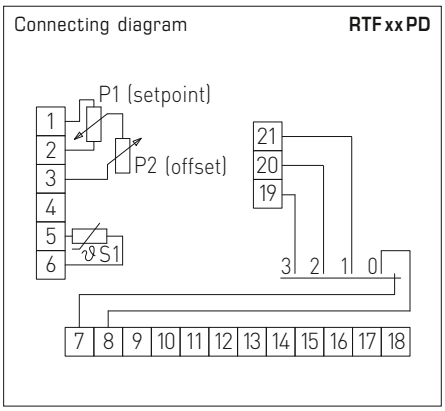

THERMASGARD® RTF xx PD Room temperature sensors

Type / WG01	Sensor / Output	Item No.
RTF xx PD	**passive**	**IP 30** (–30...+70 °C)
RTF PT100 P D4	Pt100 (according to DIN EN 60 751, class B)	1101-40B0-1007-349
RTF PT1000 P D4	Pt1000 (according to DIN EN 60 751, class B)	1101-40B0-5007-349
RTF NI1000 P D4	Ni1000 (according to DIN EN 43 760, class B, TCR = 6180 ppm / K)	1101-40B0-9007-349
RTF NITK P D4	Ni1000 TK5000 (TCR = 5000 ppm / K), LG-Ni1000	1101-40B1-0007-349
RTF LM235Z P D4	LM235Z (TCR = 10 mV / K; 2.73 V at 0 °C), KP10	1101-40B2-1007-349
RTF NTC1,8K P D4	NTC 1.8 K	1101-40B1-2007-349
RTF NTC10K P D4	NTC 10K	1101-40B1-5007-349
RTF PRECON P D4	NTC 10K Precon	1101-40B1-9007-349
RTF NTC20K P D4	NTC 20K	1101-40B1-6007-349
RTF KTY81-210 P D4	KTY 81-210	1101-40B2-0007-349
RTF xx PUD	**passive / active**	**IP 30** (0 ... +50 °C)
RTF PT1000 PU D4	Pt1000 / 0-10 V (potentiometer)	1101-40B0-5019-349

Operating elements Baldur 1 — Possible combinations	1	2	3	4	5	6
Sensor 1	●	●	●	●	●	●
Sensor 2	●		●			
Sensor 3 LM235Z with calibrating pot (4-wire)	●			●	●	
Potentiometer 1 with / without series resistor	●	●	●	●		
Potentiometer 2 with calibrating pot					●	●
LED 1 (max. one LED)						
LED 2 (max. two LEDs)						
LED 3 (max. three LEDs)						
LED 4 (max. four LEDs)	●	●	●	●	●	●
Rocker switch		●	●			●
Push-button 1 (max. one button)	●		●		●	●
Push-button 2 (max. two buttons)		●		●		

Sensor 3 to be used with 4-wire connection, thereby max. 3 LEDs possible.
LM235Z with calibrating pot = calibration of sensor output signal.
Satchwell switching possible with sensor 2.
Turn switches are not possible with Baldur 1!

Please specify in your order:
Ohm rating of potentiometer (e. g. 100 Ohm, 1 kOhm, 2.5 kOhm, 5 kOhm, 10 kOhm)
Colour of LED (e. g. green, red, yellow)
Printing, form of swelling arrow (wedge-shaped or with central position, points or numerical scale)
Requested features regarding operating and / or display elements and wiring
We offer special designs on request in written form including approval drawing.
Special printing: See last chapter "Accessories"

Operating elements Baldur 2 — Possible combinations	1	2	3	4	5	6	7	8	9	10
Sensor 1	●	●	●	●	●	●	●	●	●	●
Sensor 2 LM235Z with calibrating pot	●						●			
Sensor 3 with heat sink (4-wire)										
Potentiometer 1 (at bottom) with / without series resistor	●	●		●		●	●	●		●
Potentiometer 2 (at top)		●						●		
Key switch (at bottom)			●						●	
Turn switch 1 (at top) with / without series resistor				●						●
Turn switch 2 (at bottom)					●					
LED 1 (max. one LED)										
LED 2 (max. two LEDs)										
LED 3 (max. three LEDs)		●						●		
LED 4 (max. four LEDs)				●						●
LED 5 (max. five LEDs)	●		●		●		●		●	
LED 6 (max. six LEDs)						●				
Rocker switch	●	●	●	●	●	●				
Push-button 1 (max. one button)										
Push-button 2 (max. two buttons)	●	●	●		●	●				●
Push-button 3 (max. three buttons)										
Push-button 4 (max. four buttons)							●	●	●	

Sensor 3 can also be used instead of sensor 1.
LM235Z with calibrating pot = calibration of sensor output signal.
In the case cascade connections with turn switch 1, LEDs are not possible!
With the Baldur 2 enclosure, only one operating element is possible at each of the positions "(at bottom)" and "(at top)"!

Configuration variants of room operating units

Room temperature sensors and measuring transducers in-wall, panel switch programme

S+S REGELTECHNIK

An overview of various versions ...

with potentiometer, rocker switch and LED



with push-buttons and LEDs



Room temperature sensor



with push-buttons and LEDs



with potentiometer



with potentiometer



with potentiometer, push-button, and LED



with potentiometer, push-button, and LEDs



with potentiometer, push-buttons, and LEDs



with potentiometer, push-buttons, and LEDs



with potentiometer, push-button, and LED



with potentiometer and turn switch



with potentiometer, push-buttons, and LEDs



with potentiometer, push-button, and LED



with potentiometer, turn switch, and LEDs



with potentiometer and rocker switch



with potentiometer, push-button, and LED



with potentiometer, push-button, and LEDs



Room temperature sensors in-wall, panel switch programme, general

S+S REGELTECHNIK

A room temperature sensor **THERM**ASGARD® **FSTF** is used for air temperature measurement or setpoint adjustment, for presence detection or as room control and operating panel with temperature sensor, push-buttons, potentiometers, status indicators (LEDs).

The in-wall sensor is mounted in high-quality panel switch programmes, ideally of the brands Gira, Berker, Merten, Jung, Siemens or Busch-Jaeger (using in-wall adapters) either individually or in combination with light switches, socket outlets, etc.

It is used in non-aggressive, dust-free environments, in refrigeration, air conditioning and clean room technology, and in interior rooms, such as living rooms, offices, hotels, etc.

Circuit diagram **FSTF - xx**

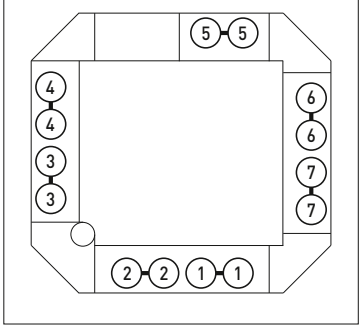

TECHNICAL DATA

Measuring ranges:	–30...+60 °C
Sensor / output:	see table, assembled on board, passive
Range suppression:	in the button
Testing current:	< 0.6 mA (Pt1000) < 1.0 mA (Pt100) < 0.3 mA (Ni1000, Ni1000 TK5000) < 2.0 mW (NTC xx) < 2.0 mA (KTY 81-210) 400 µA...5 mA (LM235Z)
Potentiometers:	standard 1 kΩ, max. 0.1 W (other ratings optional on request, e. g. 100 Ω, 2.5 kΩ, 5 kΩ, 10 kΩ optional 0-10 V linear)
Turn switches:	max. 24 V AC / DC, max. 130 mA, max. 5 steps (0, Auto, I, II, III)
Rocker switch:	max. 24 V AC / DC, max. 130 mA
Push-buttons:	normally open contact, max. 24 V DC / 10 mA
LEDs:	max. 24 V DC (optional max. 24 V AC), standard green (red, yellow or two-colour optional)
Installation:	in in-wall flush box Ø 55 mm
Electrical connection:	via plug terminals, 0.14 - 1.5 mm², on safety extra-low voltage only, max. 42 V AC, 60 V DC
Humidity:	max. 90 % r.H., non-precipitating air
Protection class:	III (according to EN 60 730)
Protection type:	IP 20 (according to EN 60 529)
SWITCH PROGRAMMES	
Manufacturer:	GIRA System 55 (other switch programmes, manufacturers, colours and prices upon request
Enclosure:	plastic, standard colour pure white, glossy (similar to RAL 9010) (other colours are possible on request with colour variants depending on the respective light switch programme)

Dimensional drawing **FSTF - xx**

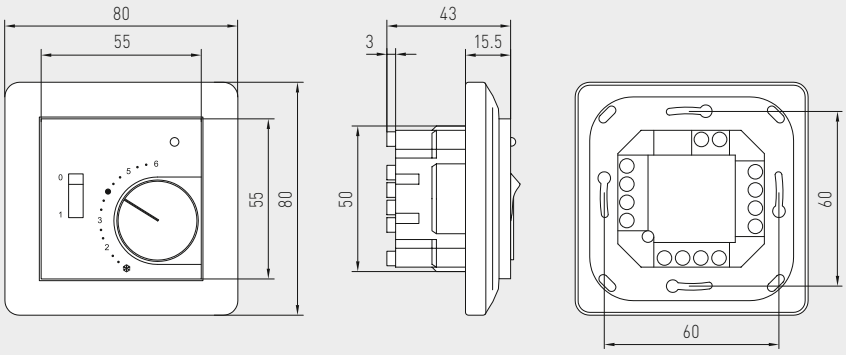

Installation scheme **FSTF - xx**

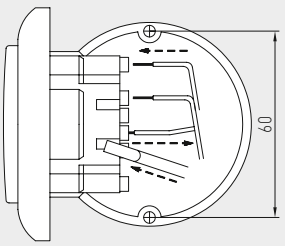



FSTF 1
Standard version
with sensor

1x two-wire connection
Standard

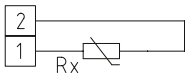

1x two-wire connection
LM 235 Z (KP 10)

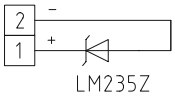

THERMASGARD® **FSTF 1**	Room temperature sensors	
Type / WG01	**Sensor / Output**	**Item No.**
FSTF1	**passive**	**IP 20** (–30...+60 °C)
FSTF1 PT100	Pt100 (according to DIN EN 60 751, class B)	1101-5020-1000-162
FSTF1 PT1000	Pt1000 (according to DIN EN 60 751, class B)	1101-5020-5000-162
FSTF1 NI1000	Ni1000 (according to DIN EN 43 760, class B, TCR = 6180 ppm / K)	1101-5020-9000-162
FSTF1 NITK	Ni1000 TK5000 (TCR = 5000 ppm / K), LG-Ni1000	1101-5021-0000-162
FSTF1 LM235Z	LM235Z (TCR = 10 mV / K; 2.73 V at 0 °C), KP10	1101-5022-1000-162
FSTF1 NTC1,8K	NTC 1.8 K	1101-5021-2000-162
FSTF1 NTC10K	NTC 10K	1101-5021-5000-162
FSTF1 NTC10K PRECON	NTC 10K Precon	1101-5021-9000-162
FSTF1 NTC20K	NTC 20K	1101-5021-6000-162
FSTF1 KTY81-210	KTY 81-210	1101-5022-0000-162

Dimensional drawing **FSTF - 1**

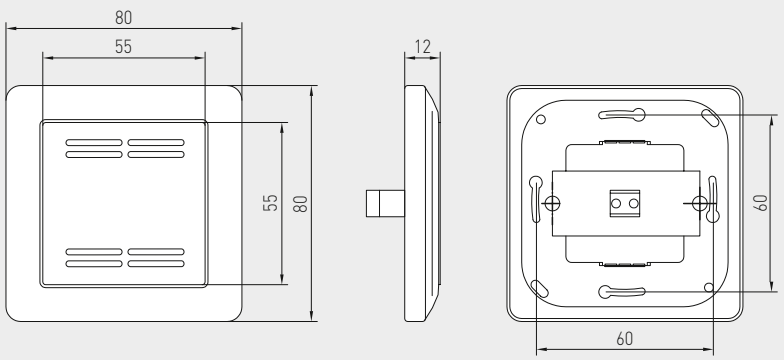

**Room temperature sensors
in-wall, panel switch programme,
different versions**

S+S REGELTECHNIK



FSTF xx LT
Version with sensor,
LED (green), and push-button
(max. 24 V DC, max. 10 mA)

Connecting diagram **FSTF xx LT**

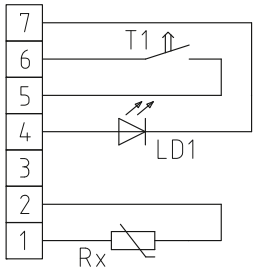

THERMASGARD® FSTF xx LT Room temperature sensors

Type / WG01	Sensor / Output	Item No.
FSTF xx LT	**passive**	**IP 20** (–30...+60 °C)
FSTF PT100 L T	Pt100 (according to DIN EN 60 751, class B)	1101-5020-1593-350
FSTF PT1000 L T	Pt1000 (according to DIN EN 60 751, class B)	1101-5020-5593-350
FSTF NI1000 L T	Ni1000 (according to DIN EN 43 760, class B, TCR = 6180 ppm / K)	1101-5020-9593-350
FSTF NITK L T	Ni1000 TK5000 (TCR = 5000 ppm / K), LG-Ni1000	1101-5021-0593-350
FSTF LM235Z L T	LM235Z (TCR = 10 mV / K; 2.73 V at 0 °C), KP10	1101-5022-1593-350
FSTF NTC1,8K L T	NTC 1.8 K	1101-5021-2593-350
FSTF NTC10K L T	NTC 10K	1101-5021-5593-350
FSTF NTC10KPRE L T	NTC 10K Precon	1101-5021-9593-350
FSTF NTC20K L T	NTC 20K	1101-5021-6593-350
FSTF KTY81-210 L T	KTY 81-210	1101-5022-0593-350



FSTF xx LD2
Version with sensor,
LED (green), and turn switch (2-step)
(max. 24 V AC / DC, max. 130 mA)

Connecting diagram **FSTF xx LD2**

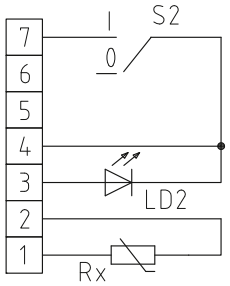

THERMASGARD® FSTF xx LD2 Room temperature sensors

Type / WG01	Sensor / Output	Item No.
FSTF xx LD2	**passive**	**IP 20** (–30...+60 °C)
FSTF PT100 D2 L	Pt100 (according to DIN EN 60 751, class B)	1101-5020-1631-351
FSTF PT1000 D2 L	Pt1000 (according to DIN EN 60 751, class B)	1101-5020-5631-351
FSTF NI1000 D2 L	Ni1000 (according to DIN EN 43 760, class B, TCR = 6180 ppm / K)	1101-5020-9631-351
FSTF NITK D2 L	Ni1000 TK5000 (TCR = 5000 ppm / K), LG-Ni1000	1101-5021-0631-351
FSTF LM235Z D2 L	LM235Z (TCR = 10 mV / K; 2.73 V at 0 °C), KP10	1101-5022-1631-351
FSTF NTC1,8K D2 L	NTC 1.8 K	1101-5021-2631-351
FSTF NTC10K D2 L	NTC 10K	1101-5021-5631-351
FSTF NTC10KPRE D2 L	NTC 10K Precon	1101-5021-9631-351
FSTF NTC20K D2 L	NTC 20K	1101-5021-6631-351
FSTF KTY81-210 D2 L	KTY 81-210	1101-5022-0631-351



FSTF xx LD4
Version with sensor,
LED (green) and turn switch (4-step)
(max. 24 V AC / DC, max. 130 mA)

Connecting diagram **FSTF xx LD4**

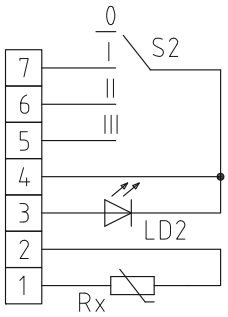

THERMASGARD® FSTF xx LD4 Room temperature sensors

Type / WG01	Sensor / Output	Item No.
FSTF xx LD4	**passive**	**IP 20** (–30...+60 °C)
FSTF PT100 D4 L	Pt100 (according to DIN EN 60751, class B)	1101-5020-1643-352
FSTF PT1000 D4 L	Pt1000 (according to DIN EN 60751, class B)	1101-5020-5643-352
FSTF NI1000 D4 L	Ni1000 (according to DIN EN 43760, class B, TCR = 6180 ppm / K)	1101-5020-9643-352
FSTF NITK D4 L	Ni1000 TK5000 (TCR = 5000 ppm / K), LG-Ni1000	1101-5021-0643-352
FSTF LM235Z D4 L	LM235Z (TCR = 10 mV / K; 2.73 V at 0 °C), KP10	1101-5022-1643-352
FSTF NTC1,8K D4 L	NTC 1.8 K	1101-5021-2643-352
FSTF NTC10K D4 L	NTC 10K	1101-5021-5643-352
FSTF NTC10KPRE D4 L	NTC 10K Precon	1101-5021-9643-352
FSTF NTC20K D4 L	NTC 20K	1101-5021-6643-352
FSTF KTY81-210 D4 L	KTY 81-210	1101-5022-0643-352



FSTF xx P
Version with sensor
and potentiometer
(1 kOhm, max. 0.1 W)

Connecting diagram **FSTF xx P**

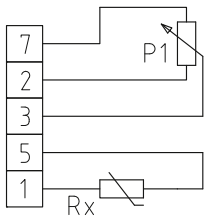

THERMASGARD® FSTF xx P Room temperature sensors

Type / WG01	Sensor / Output	Item No.
FSTF xx P	**passive**	**IP 20** (–30...+60 °C)
FSTF PT100 P	Pt100 (according to DIN EN 60751, class B)	1101-5020-1001-282
FSTF PT1000 P	Pt1000 (according to DIN EN 60751, class B)	1101-5020-5001-162
FSTF NI1000 P	Ni1000 (according to DIN EN 43760, class B, TCR = 6180 ppm / K)	1101-5020-9001-162
FSTF NITK P	Ni1000 TK5000 (TCR = 5000 ppm / K), LG-Ni1000	1101-5021-0001-162
FSTF LM235Z P	LM235Z (TCR = 10 mV / K; 2.73 V at 0 °C), KP10	1101-5022-1001-162
FSTF NTC1,8K P	NTC 1.8 K	1101-5021-2001-162
FSTF NTC10K P	NTC 10K	1101-5021-5001-162
FSTF NTC10KPRECON P	NTC 10K Precon	1101-5021-9001-162
FSTF NTC20K P	NTC 20K	1101-5021-6001-162
FSTF KTY81-210 P	KTY 81-210	1101-5022-0001-162



FSTF xx PLW
Version with sensor,
potentiometer (1 kOhm, max. 0.1 W),
LED (green), and rocker switch
(max. 24 V AC / DC, max. 130 mA)

Connecting diagram **FSTF xx PLW**

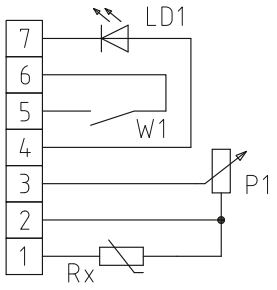

THERMASGARD® FSTF xx PLW Room temperature sensors

Type / WG01	Sensor / Output	Item No.
FSTF xx PLW	**passive**	**IP 20** (–30...+60 °C)
FSTF PT100 P L W	Pt100 (according to DIN EN 60 751, class B)	1101-5020-1655-353
FSTF PT1000 P L W	Pt1000 (according to DIN EN 60 751, class B)	1101-5020-5655-353
FSTF NI1000 P L W	Ni1000 (according to DIN EN 43 760, class B, TCR = 6180 ppm / K)	1101-5020-9655-353
FSTF NITK P L W	Ni1000 TK5000 (TCR = 5000 ppm / K), LG-Ni1000	1101-5021-0655-353
FSTF LM235Z P L W	LM235Z (TCR = 10 mV / K; 2.73 V at 0 °C), KP10	1101-5022-1655-353
FSTF NTC1,8K P L W	NTC 1.8 K	1101-5021-2655-353
FSTF NTC10K P L W	NTC 10K	1101-5021-5655-353
FSTF NTC10KPRE P L W	NTC 10K Precon	1101-5021-9655-353
FSTF NTC20K P L W	NTC 20K	1101-5021-6655-353
FSTF KTY81-210 P L W	KTY 81-210	1101-5022-0655-353



FSTF xx PLT
Version with sensor,
potentiometer (1 kOhm, max. 0.1 W),
LED (green), and push-button
(max. 24 V DC, max. 10 mA)

Connecting diagram **FSTF xx PLT**

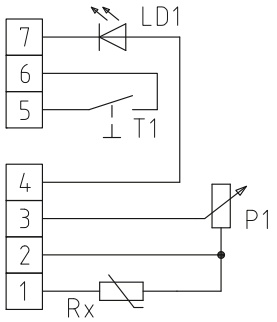

THERMASGARD® FSTF xx PLT Room temperature sensors

Type / WG01	Sensor / Output	Item No.
FSTF xx PLT	**passive**	**IP 20** (–30...+60 °C)
FSTF PT100 P L T	Pt100 (according to DIN EN 60 751, class B)	1101-5020-1663-162
FSTF PT1000 P L T	Pt1000 (according to DIN EN 60 751, class B)	1101-5020-5663-162
FSTF NI1000 P L T	Ni1000 (according to DIN EN 43 760, class B, TCR = 6180 ppm / K)	1101-5020-9663-350
FSTF NITK P L T	Ni1000 TK5000 (TCR = 5000 ppm / K), LG-Ni1000	1101-5021-0663-350
FSTF LM235Z P L T	LM235Z (TCR = 10 mV / K; 2.73 V at 0 °C), KP10	1101-5022-1663-350
FSTF NTC1,8K P L T	NTC 1.8 K	1101-5021-2663-350
FSTF NTC10K P L T	NTC 10K	1101-5021-5663-350
FSTF NTC10KPRE P L T	NTC 10K Precon	1101-5021-9663-350
FSTF NTC20K P L T	NTC 20K	1101-5021-6663-350
FSTF KTY81-210 P L T	KTY 81-210	1101-5022-0663-350



FSTF xx PD4
Version with sensor,
potentiometer (1 kOhm, max. 0.1 W)
and turn switch
(max. 24 V AC / DC, max. 130 mA)

Connecting diagram **FSTF xx PD4**

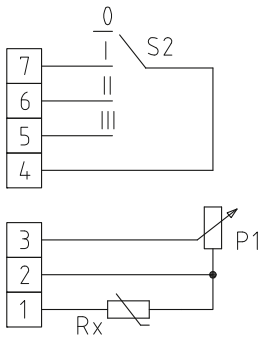

THERMASGARD® FSTF xx PD4 Room temperature sensors

Type / WG01	Sensor / Output	Item No.
FSTF xx PD4	**passive**	**IP 20** (–30...+60 °C)
FSTF PT100 P D4	Pt100 (according to DIN EN 60751, class B)	1101-5020-1007-354
FSTF PT1000 P D4	Pt1000 (according to DIN EN 60751, class B)	1101-5020-5007-354
FSTF NI1000 P D4	Ni1000 (according to DIN EN 43760, class B, TCR = 6180 ppm / K)	1101-5020-9007-354
FSTF NITK P D4	Ni1000 TK5000 (TCR = 5000 ppm / K), LG-Ni1000	1101-5021-0007-354
FSTF LM235Z P D4	LM235Z (TCR = 10 mV / K; 2.73 V at 0 °C), KP10	1101-5022-1007-354
FSTF NTC1,8K P D4	NTC 1.8 K	1101-5021-2007-354
FSTF NTC10K P D4	NTC 10K	1101-5021-5007-354
FSTF NTC10KPRE P D4	NTC 10K Precon	1101-5021-9007-354
FSTF NTC20K P D4	NTC 20K	1101-5021-6007-354
FSTF KTY81-210 P D4	KTY 81-210	1101-5022-0007-354



FSTF xx P 2L 2T
Version with sensor,
potentiometer (1 kOhm, max. 0.1 W),
2 LEDs (green, red), and 2 push-buttons
(max. 24 V DC, max. 10 mA)

Connecting diagram **FSTF xx P 2L 2T**

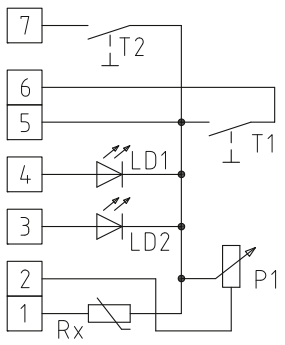

THERMASGARD® FSTF xx P 2L 2T Room temperature sensors

Type / WG01	Sensor / Output	Item No.
FSTF xx P 2L 2T	**passive**	**IP 20** (–30...+60 °C)
FSTF PT100 P 2L 2T	Pt100 (according to DIN EN 60751, class B)	1101-5020-1672-256
FSTF PT1000 P 2L 2T	Pt1000 (according to DIN EN 60751, class B)	1101-5020-5672-256
FSTF NI1000 P 2L 2T	Ni1000 (according to DIN EN 43760, class B, TCR = 6180 ppm / K)	1101-5020-9672-256
FSTF NITK P2L2T	Ni1000 TK5000 (TCR = 5000 ppm / K), LG-Ni1000	1101-5021-0672-256
FSTF LM235Z P 2L 2T	LM235Z (TCR = 10 mV / K; 2.73 V at 0 °C), KP10	1101-5022-1672-256
FSTF NTC1,8K P 2L 2T	NTC 1.8 K	1101-5021-2672-256
FSTF NTC10K P 2L 2T	NTC 10K	1101-5021-5672-256
FSTF NTC10KPRE P2L2T	NTC 10K Precon	1101-5021-9672-256
FSTF NTC20K P 2L 2T	NTC 20K	1101-5021-6672-256
FSTF KTY81-210 P2L2T	KTY 81-210	1101-5022-0672-256

S+S REGELTECHNIK

In-ceiling temperature sensors with passive output

THERMASGARD® **DTF** is a small in-ceiling resistance thermometer with passive output for in-wall installation, e.g. in plasterboard walls or suspended ceilings. The in-ceiling temperature sensor DTF is preferably installed in ceilings and walls, blends in seamlessly with the overall architectural design and detects the temperature at the surface.
The connecting head is pluggable for quick, easy mounting.

DTF
Connecting head, pluggable



TECHNICAL DATA

Measuring range:	–20...+90 °C
Sensors / output:	see table, passive
Connection type:	4-wire connection **terminal 1 / 2: +** (marked red, wire colours: yellow, brown) **terminal 3 / 4: –** (marked black, wire colours: white, green)
Testing current:	< 0.6 mA (Pt1000) < 1.0 mA (Pt100) < 0.3 mA (Ni1000, Ni1000 TK5000) < 2.0 mW (NTC xx) < 2.0 mA (KTY 81-210) 400 µA...5 mA (LM235Z)
Connecting head:	plastic, material polycarbonate (PC), colour white (can be painted as an option), **pluggable**
Connecting cable:	PVC, LiYY, 4 x 0.14 mm², KL = approx. 2 m
Process connection:	inside suspended ceiling, ceiling cutout Ø = 30 mm, cover Ø = < 35 mm
Insulating resistance:	≥ 100 MΩ, at +20 °C (500V DC)
Humidity:	< 95 % r.H., non-precipitating air
Protection class:	III (according to EN 60 730)
Protection type:	IP 30 (according to EN 60 529)

Dimensional drawing **DTF**

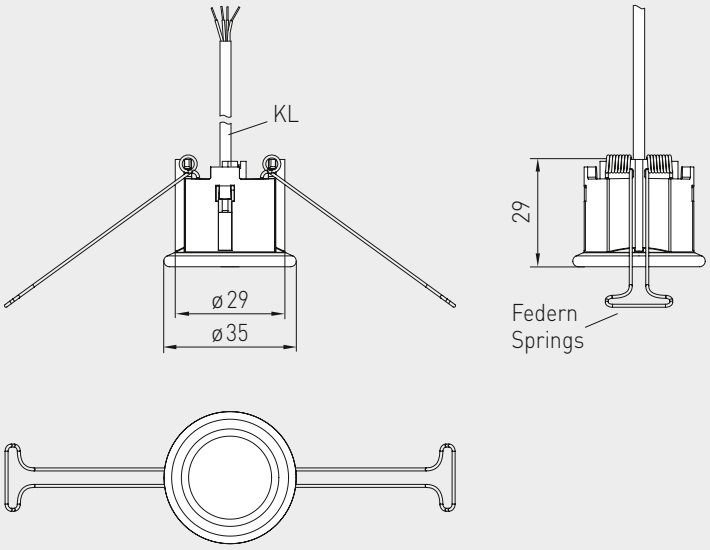

1x four-wire connection
standard

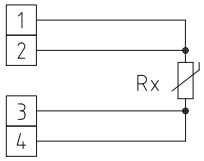

1x four-wire connection
LM 235 Z (KP 10)

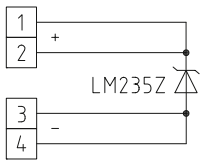

DTF



THERMASGARD® DTF	In-ceiling temperature sensors	
Type / WG03	**Sensor / Output**	**Item No.**
DTF	**Pt, Ni, LM235Z**	**IP 30**
DTF PT100	Pt100 (according to DIN EN 60 751, class B)	1101-60C0-1003-000
DTF PT1000	Pt1000 (according to DIN EN 60 751, class B)	1101-60C0-5003-000
DTF NI1000	Ni1000 (according to DIN EN 43 760, class B, TCR = 6180 ppm / K)	1101-60C0-9003-000
DTF NITK	Ni1000 TK5000 (TCR = 5000 ppm / K), LG-Ni1000	1101-60C1-0003-000
DTF LM235Z	LM235Z (TCR = 10 mV / K; 2.73 V at 0 °C), KP10	1101-60C2-1003-000
DTF	**NTC**	**IP 30**
DTF NTC1,8K	NTC 1.8 K	1101-60C1-2003-000
DTF NTC5K	NTC 5K	1101-60C1-4003-000
DTF NTC10K	NTC 10K	1101-60C1-5003-000
DTF PRECON	NTC 10K Precon	1101-60C1-9003-000
DTF NTC20K	NTC 20K	1101-60C1-6003-000
DTF	**KTY**	**IP 30**
DTF KTY81-210	KTY 81-210	1101-60C2-0003-000

THERMASGARD® ATF 1
THERMASGARD® ATF 01

Outside temperature sensors / wet room temperature sensors with passive output

S+S REGELTECHNIK

Outside wall resistance thermometer / weather sensor **THERM**ASGARD® **ATF 1** (internal sensor) with passive output, enclosure made of impact-resistant plastic and quick-locking screws.

Outside wall resistance thermometer / weather sensor **THERM**ASGARD® **ATF 01** (internal sensor) with passive output, enclosure made of impact-resistant plastic and snap-on lid.

It is used to measure outside temperatures, temperatures in wet room areas, e.g. as an outdoor sensor, weather sensor for installation on outside walls, in cold storage buildings and greenhouses, in halls, in the industrial sector and in agriculture. Installation in outdoor areas preferably at the north side of a building or in a protected place. In cases of direct solar irradiation, we recommend the use of our **WS01** or **WS04** sun protection hood (accessory).

1x two-wire connection
standard

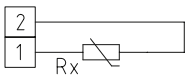

1x two-wire connection
LM 235 Z (KP 10)

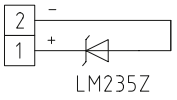

1x four-wire connection
(optional)

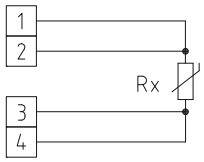

TECHNICAL DATA

Measuring range:	–50...+90 °C
Sensors / output:	passive (see table), sensors internal
Connection type:	2-wire connection (4-wire connection on PT100 / PT1000A, optional on other sensors)
Testing current:	< 0.6 mA (Pt1000) < 1.0 mA (Pt100) < 0.3 mA (Ni1000, Ni1000 TK5000) < 2.0 mW (NTC xx) 400 µA...5 mA (LM235Z)
Enclosure:	plastic, UV-stabilised, material polyamide, 30 % glass-globe reinforced, colour traffic white (similar to RAL 9016), **ATF 01 with snap-on lid,** **ATF 1 with quick-locking screws** (slotted / Phillips head combination)
Enclosure dimensions:	72 x 64 x 37.8 mm (Tyr 1 / Tyr 01)
Cable gland:	M 16 x 1.5; including strain relief, exchangeable, max. inner diameter 10.4 mm
Electrical connection:	0.14 - 1.5 mm² via terminal screws
Insulating resistance:	≥ 100 MΩ, at +20 °C (500 V DC)
Humidity:	< 95 % r. H., non-precipitating air
Protection class:	III (according to EN 60 730)
Protection type:	**ATF 01 IP 43** (according to EN 60 529) **ATF 1 IP 67** (according to EN 60 529)



THERMASGARD® **ATF 01** Outside temperature sensors / wet room temperature sensors, *Standard* with snap-on lid

Type / WG03	Sensor / Output	Item No.
ATF 01	**Pt, Ni, LM235Z**	**IP 43**
ATF01 PT100	Pt100 (according to DIN EN 60 751, class B)	1101-1030-1003-000
ATF01 PT1000	Pt1000 (according to DIN EN 60 751, class B)	1101-1030-5001-000
ATF01 NI1000	Ni1000 (according to DIN EN 43 760, class B, TCR = 6180 ppm / K)	1101-1030-9001-000
ATF01 NITK	Ni1000 TK5000 (TCR = 5000 ppm / K), LG - Ni1000	1101-1031-0001-000
ATF01 LM235Z	LM235Z (TCR = 10 mV / K; 2.73 V at 0 °C), KP10	1101-1032-1001-000
ATF 01	**NTC**	**IP 43**
ATF01 NTC1,8K	NTC 1.8 K	1101-1031-2001-000
ATF01 NTC10K	NTC 10K	1101-1031-5001-000
ATF01 NTC20K	NTC 20K	1101-1031-6001-000
Note:	Other sensors optional	on request
Accessories		
WS-01	**Sun and ball-impact protection hood,** 184 x 180 x 80 mm, stainless steel **V2A** (1.4301)	7100-0040-2000-000
WS-04	**Weather and sun protection hood,** 130 x 180 x 135 mm, stainless steel **V2A** (1.4301)	7100-0040-7000-000
	For further information see last chapter!	

Dimensional drawing

ATF 1
ATF 01

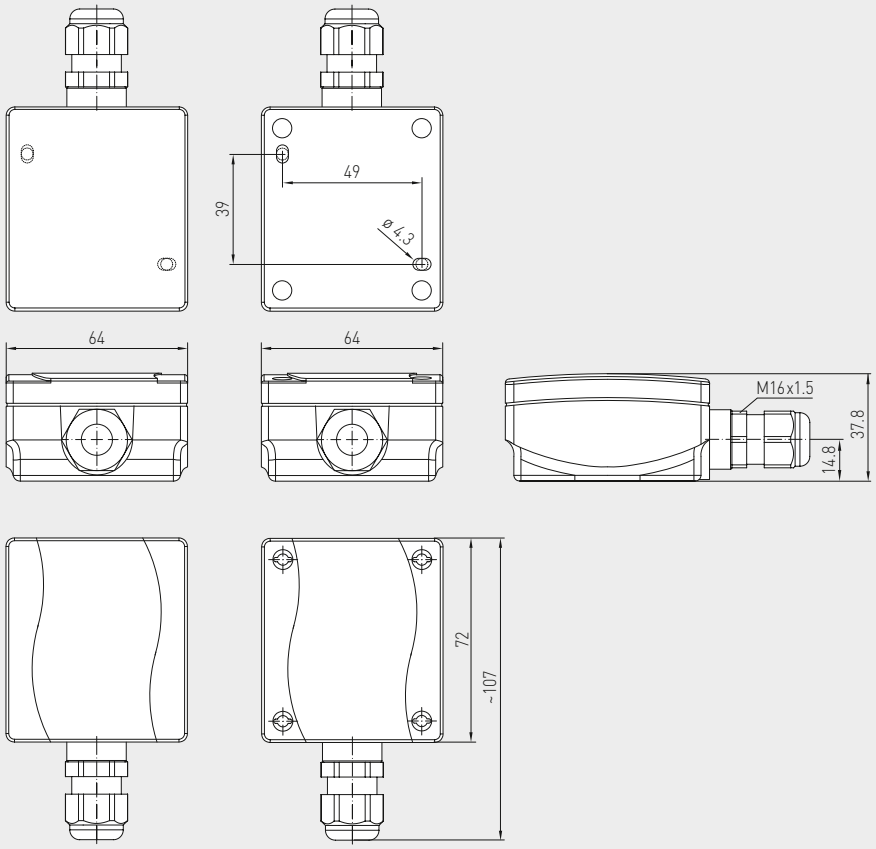

with snap-on lid

with quick-locking screws

ATF 01
with snap-on lid
(IP 43)



ATF 1
with quick-locking screws
(IP 65)



THERMASGARD® ATF 1	Outside temperature sensors / wet room temperature sensors, *Premium* with quick-locking screws	
Type / WG03	**Sensor / Output**	**Item No.**
ATF 1	**Pt, Ni, LM235Z**	**IP 65**
ATF1 PT100	Pt100 (according to DIN EN 60 751, class B)	1101-1040-1003-000
ATF1 PT1000	Pt1000 (according to DIN EN 60 751, class B)	1101-1040-5001-000
ATF1 PT1000A	Pt1000 (according to VDI / VDE 3512, class A-TGA)	1101-1040-6003-000
ATF1 NI1000	Ni1000 (according to DIN EN 43 760, class B, TCR = 6180 ppm / K)	1101-1040-9001-000
ATF1 NITK	Ni1000 TK5000 (TCR = 5000 ppm / K), LG-Ni1000	1101-1041-0001-000
ATF1 LM235Z	LM235Z (TCR = 10 mV / K; 2.73 V at 0 °C), KP10	1101-1042-1001-000
ATF 1	**NTC**	**IP 65**
ATF1 NTC1,8K	NTC 1.8 K	1101-1041-2001-000
ATF1 NTC10K	NTC 10K	1101-1041-5001-000
ATF1 NTC20K	NTC 20K	1101-1041-6001-000
Note:	Other sensors optional	on request
Accessories		
WS-01	**Sun and ball-impact protection hood,** 184 x 180 x 80 mm, stainless steel **V2A** (1.4301)	7100-0040-2000-000
WS-04	**Weather and sun protection hood,** 130 x 180 x 135 mm, stainless steel **V2A** (1.4301)	7100-0040-7000-000
	For further information see last chapter!	

Outside temperature sensors / wet room temperature sensors with passive output

S+S REGELTECHNIK

Outside wall resistance thermometers / weather sensors **THERM**ASGARD® **ATF 2** (external sensor) with passive output and enclosure made of impact-resistant plastic and with quick-locking screws.

It is used to measure outside temperatures, temperatures in wet room areas, e.g. as a weather sensor, for installation on outside walls, in cold storage buildings and greenhouses, in halls, in the industrial sector and in agriculture. Outdoor installation should preferably be performed at the north side of a building or in a protected place. In cases of direct solar irradiation, we recommend the use of our **WS01** or **WS04** sun protection hood (accessory) or the device version with installed sun protection hood **SS02** (available upon request).

TECHNICAL DATA

Measuring range:	–50...+90 °C
Sensors / output:	passive (see table), sensor inside external sensor tube, stainless steel **V4A** (1.4571) (**Perfect Sensor Protection**)
Connection type:	2-wire connection (4-wire connection on PT100/PT1000A, optional on other sensors)
Testing current:	< 0.6 mA (Pt1000) < 1.0 mA (Pt100) < 0.3 mA (Ni1000, Ni1000 TK5000) < 2.0 mW (NTC xx) 400 µA...5 mA (LM235Z)
Enclosure:	plastic, UV-stabilised, material polyamide, 30 % glass-globe reinforced, with quick-locking screws (slotted / Phillips head combination), colour traffic white (similar to RAL 9016)
Enclosure dimensions:	72 x 64 x 37.8 mm (Tyr 1)
Cable gland:	M 16 x 1.5; including strain relief, exchangeable, max. inner diameter 10.4 mm
Electrical connection:	0.14 - 1.5 mm² via terminal screws
Insulating resistance:	≥ 100 MΩ, at +20 °C (500 V DC)
Permissible humidity:	< 95 % r. H., non-precipitating air
Protection class:	III (according to EN 60 730)
Protection type:	IP 65 (according to EN 60 529)
Optional:	with sun protection hood **SS02** (available on request)

1x two-wire connection
standard

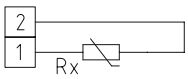

1x two-wire connection
LM 235 Z (KP 10)

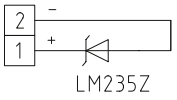

1x four-wire connection
(optional)

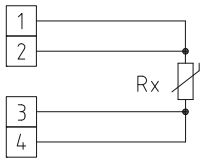





High-performance encapsulation against vibration, mechanical stress and humidity

PS-PROTECTION
PERFECT SENSOR PROTECTION

Dimensional drawing ATF 2

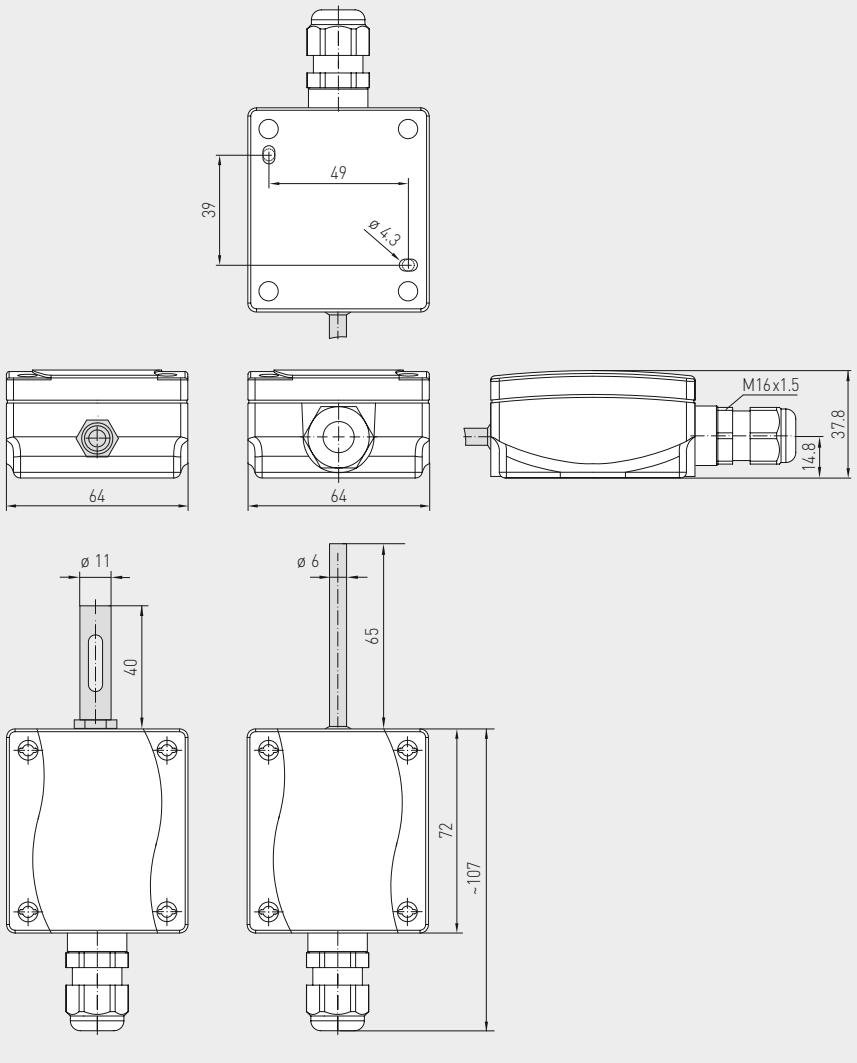

ATF 2



ATF 2
with SS-02



THERMASGARD® ATF 2 Outside temperature sensors / wet room temperature sensors		
Type / WG03	**Sensor / Output**	**Item No.**
ATF 2	**Pt, Ni, LM235Z**	**IP 65**
ATF2 PT100	Pt100 (according to DIN EN 60 751, class B)	1101-1050-1003-000
ATF2 PT1000	Pt1000 (according to DIN EN 60 751, class B)	1101-1050-5001-000
ATF2 PT1000A	Pt1000 (according to VDI / VDE 3512, class A-TGA)	1101-1050-6003-000
ATF2 NI1000	Ni1000 (according to DIN EN 43 760, class B, TCR = 6180 ppm / K)	1101-1050-9001-000
ATF2 NITK	Ni1000 TK5000 (TCR = 5000 ppm / K), LG-Ni1000	1101-1051-0001-000
ATF2 LM235Z	LM235Z (TCR = 10 mV / K; 2.73 V at 0 °C), KP10	1101-1052-1001-000
ATF 2	**NTC**	**IP 65**
ATF2 NTC1,8K	NTC 1.8 K	1101-1051-2001-000
ATF2 NTC10K	NTC 10K	1101-1051-5001-000
ATF2 NTC20K	NTC 20K	1101-1051-6001-000
Extra charge:	Other sensors optional with sun protection hood **SS 02**	on request on request
Accessories		
WS-01	**Sun and ball-impact protection hood,** 184 x 180 x 80 mm, stainless steel **V2A** (1.4301)	7100-0040-2000-000
WS-04	**Weather and sun protection hood,** 130 x 180 x 135 mm, stainless steel **V2A** (1.4301)	7100-0040-7000-000
	For further information see last chapter!	

THERMASGARD® TF 43
THERMASGARD® TF 65

Immersion / screw-in / duct temperature sensors with passive output

S+S REGELTECHNIK

Patented quality product (Immersion sensor patent no. DE 10 2012 017 500.0)

THERMASGARD® **TF 43** is a resistance thermometer with a passive output, enclosure made from impact-resistant plastic with snap-on lid, and straight protective tube.

THERMASGARD® **TF 65** is a resistance thermometer with a passive output, enclosure made from impact-resistant plastic with quick-locking screws, and straight protective tube.

These immersion / screw-in / duct temperature sensors are electric contact thermometers for temperature measurement in liquids and gases, which are installed for example in piping systems and vessels. For aggressive media, stainless steel immersion sleeves must be used. Applications of these temperature sensors in piping systems, in heating technology, in storage tanks, in district heating compact stations, in hot and cold-water systems, in oil and lubricant circulation systems, in mechanical, apparatus and plant engineering as well as in the entire industrial sector.

1x two-wire connection
Standard

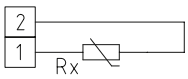

1x two-wire connection
LM 235 Z (KP 10)

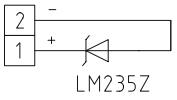

1x four-wire connection
(optional)

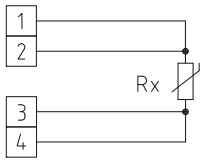

TECHNICAL DATA

Measuring range:	–30...+150 °C (T_{max} NTC = +150 °C, T_{max} LM235Z = +125 °C)
Sensors / output:	see table, passive (**Perfect Sensor Protection**) (optional also with two sensors)
Connection type:	2-wire connection (4-wire connection on PT100 / PT1000A, optional on other sensors)
Testing current:	< 0.6 mA (Pt1000) < 1.0 mA (Pt100) < 0.3 mA (Ni1000, Ni1000 TK5000) < 2.0 mW (NTC xx) 400 µA...5 mA (LM235Z)
Insulating resistance:	≥ 100 MΩ, at +20 °C (500 V DC)
Ambient temperature:	–20...+100 °C
Enclosure:	plastic, UV-stabilised, material polyamide, 30 % glass-globe reinforced, colour traffic white (similar to RAL 9016) **TF 43 with snap-on lid** **TF 65 with quick-locking screws** (slotted / Phillips head combination)
Enclosure dimensions:	72 x 64 x 37.8 mm (Tyr 1 / Tyr 01)
Cable gland:	M 16 x 1.5; including strain relief, exchangeable, max. inner diameter 10.4 mm
Electrical connection:	0.14 - 1.5 mm², via terminal screws
Protective tube:	stainless steel, **V4A** (1.4571), Ø = 6 mm, inserted length (EL) = 50 - 400 mm (see table)
Permissible humidity:	< 95 % r. H., non-precipitating air
Protection class:	III (according to EN 60 730)
Protection type:	**TF 43 IP 43** (according to EN 60 529) **TF 65 IP 65** (according to EN 60 529)





ACCESSORIES	
MF-15-K	**Mounting flange,** plastic, 56.8 x 84.3 mm, Ø = 15.2 mm tube gland, T_{max} = +100 °C
TH 08-ms / xx	**Immersion sleeve,** brass, nickel-plated, Ø = 8 mm, T_{max} = +150 °C, p_{max} = 10 bar
TH 08-VA / xx	**Immersion sleeve,** stainless steel, **V4A** (1.4571), Ø = 8 mm, T_{max} = +600 °C, p_{max} = 40 bar
TH 08-VA / xx / 90	**Immersion sleeve,** stainless steel, **V4A** (1.4571), with neck tube (90 mm), Ø = 8 mm, T_{max} = +600 °C, p_{max} = 40 bar

High-performance encapsulation against vibration, mechanical stress and humidity

PS-PROTECTION
PERFECT SENSOR PROTECTION

Dimensional drawing

TF 43
TF 65

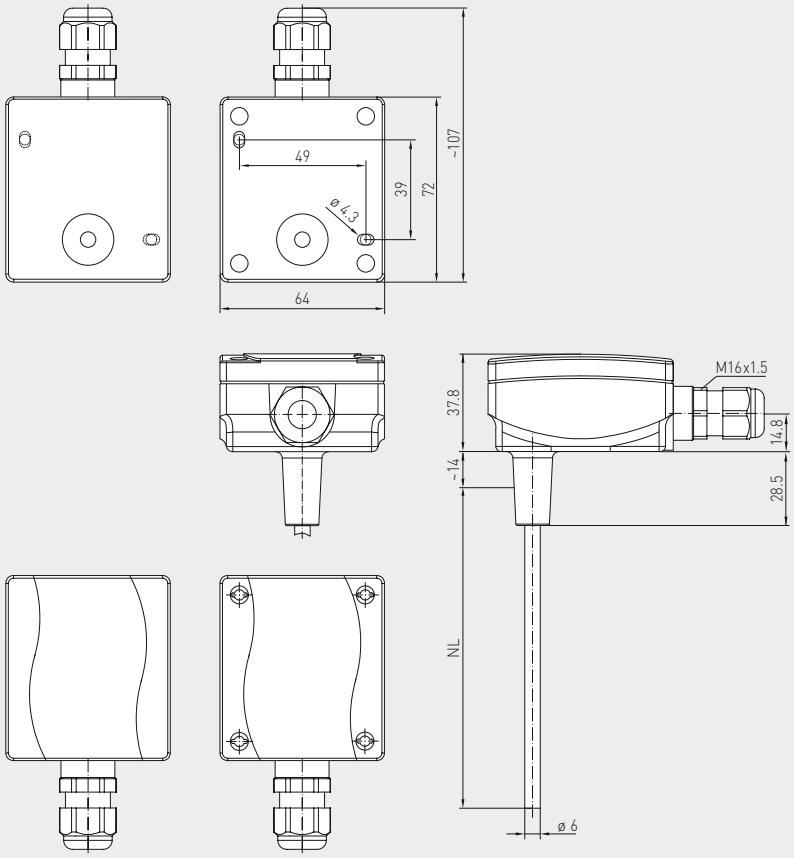

with snap-on lid
(IP 43)

with quick-locking screws
(IP 65)

TF 43
with snap-on lid
(IP 43)



TF 65
with quick-locking screws
(IP 65)



PATENTED

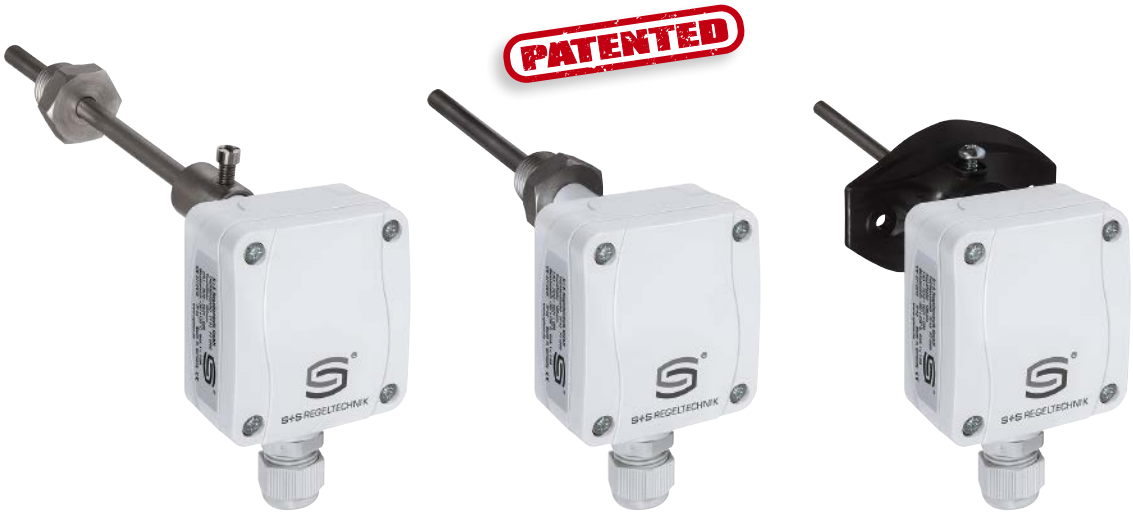

TF xx
Basic device
with accessories

THERMASGARD® TF 65	Temperature sensors (Basic device with quick-locking screws), *Premium*	
Type / WG03 / EL	**Sensor / Output**	**Item No.**
TF65 PT100 xx	**Pt100**	**IP65**
TF65 PT100 50MM	Pt100 (according to DIN EN 60 751, class B)	1101-7020-1013-000
TF65 PT100 100MM	Pt100 (according to DIN EN 60 751, class B)	1101-7020-1023-000
TF65 PT100 150MM	Pt100 (according to DIN EN 60 751, class B)	1101-7020-1033-000
TF65 PT100 200MM	Pt100 (according to DIN EN 60 751, class B)	1101-7020-1043-000
TF65 PT100 250MM	Pt100 (according to DIN EN 60 751, class B)	1101-7020-1053-000
TF65 PT100 300MM	Pt100 (according to DIN EN 60 751, class B)	1101-7020-1063-000
TF65 PT100 350MM	Pt100 (according to DIN EN 60 751, class B)	1101-7020-1073-000
TF65 PT100 400MM	Pt100 (according to DIN EN 60 751, class B)	1101-7020-1083-000
TF65 PT1000 xx	**Pt1000**	**IP65**
TF65 PT1000 50MM	Pt1000 (according to DIN EN 60 751, class B)	1101-7020-5011-000
TF65 PT1000 100MM	Pt1000 (according to DIN EN 60 751, class B)	1101-7020-5021-000
TF65 PT1000 150MM	Pt1000 (according to DIN EN 60 751, class B)	1101-7020-5031-000
TF65 PT1000 200MM	Pt1000 (according to DIN EN 60 751, class B)	1101-7020-5041-000
TF65 PT1000 250MM	Pt1000 (according to DIN EN 60 751, class B)	1101-7020-5051-000
TF65 PT1000 300MM	Pt1000 (according to DIN EN 60 751, class B)	1101-7020-5061-000
TF65 PT1000 350MM	Pt1000 (according to DIN EN 60 751, class B)	1101-7020-5071-000
TF65 PT1000 400MM	Pt1000 (according to DIN EN 60 751, class B)	1101-7020-5081-000
TF65 PT1000A xx	**Pt1000A**	**IP65**
TF65 PT1000A 50MM	Pt1000 (according to VDI / VDE 3512, class A-TGA)	1101-7020-6013-000
TF65 PT1000A 100MM	Pt1000 (according to VDI / VDE 3512, class A-TGA)	1101-7020-6023-000
TF65 PT1000A 150MM	Pt1000 (according to VDI / VDE 3512, class A-TGA)	1101-7020-6033-000
TF65 PT1000A 200MM	Pt1000 (according to VDI / VDE 3512, class A-TGA)	1101-7020-6043-000
TF65 PT1000A 250MM	Pt1000 (according to VDI / VDE 3512, class A-TGA)	1101-7020-6053-000
TF65 PT1000A 300MM	Pt1000 (according to VDI / VDE 3512, class A-TGA)	1101-7020-6063-000
TF65 PT1000A 350MM	Pt1000 (according to VDI / VDE 3512, class A-TGA)	1101-7020-6073-000
TF65 PT1000A 400MM	Pt1000 (according to VDI / VDE 3512, class A-TGA)	1101-7020-6083-000
TF65 Ni1000 xx	**Ni 1000**	**IP65**
TF65 NI1000 50MM	Ni1000 (according to DIN EN 43 760, class B, TCR = 6180 ppm / K)	1101-7020-9011-000
TF65 NI1000 100MM	Ni1000 (according to DIN EN 43 760, class B, TCR = 6180 ppm / K)	1101-7020-9021-000
TF65 NI1000 150MM	Ni1000 (according to DIN EN 43 760, class B, TCR = 6180 ppm / K)	1101-7020-9031-000
TF65 NI1000 200MM	Ni1000 (according to DIN EN 43 760, class B, TCR = 6180 ppm / K)	1101-7020-9041-000
TF65 NI1000 250MM	Ni1000 (according to DIN EN 43 760, class B, TCR = 6180 ppm / K)	1101-7020-9051-000
TF65 NI1000 300MM	Ni1000 (according to DIN EN 43 760, class B, TCR = 6180 ppm / K)	1101-7020-9061-000
TF65 NI1000 350MM	Ni1000 (according to DIN EN 43 760, class B, TCR = 6180 ppm / K)	1101-7020-9071-000
TF65 NI1000 400MM	Ni1000 (according to DIN EN 43 760, class B, TCR = 6180 ppm / K)	1101-7020-9081-000
TF65 NI1000TK xx	**Ni1000 TK5000**	**IP65**
TF65 NITK 50MM	Ni1000 TK5000 (TCR = 5000 ppm / K), LG-Ni1000	1101-7021-0011-000
TF65 NITK 100MM	Ni1000 TK5000 (TCR = 5000 ppm / K), LG-Ni1000	1101-7021-0021-000
TF65 NITK 150MM	Ni1000 TK5000 (TCR = 5000 ppm / K), LG-Ni1000	1101-7021-0031-000
TF65 NITK 200MM	Ni1000 TK5000 (TCR = 5000 ppm / K), LG-Ni1000	1101-7021-0041-000
TF65 NITK 250MM	Ni1000 TK5000 (TCR = 5000 ppm / K), LG-Ni1000	1101-7021-0051-000
TF65 NITK 300MM	Ni1000 TK5000 (TCR = 5000 ppm / K), LG-Ni1000	1101-7021-0061-000
TF65 NITK 350MM	Ni1000 TK5000 (TCR = 5000 ppm / K), LG-Ni1000	1101-7021-0071-000
TF65 NITK 400MM	Ni1000 TK5000 (TCR = 5000 ppm / K), LG-Ni1000	1101-7021-0081-000

Continued on next page...

High-performance encapsulation against vibration, mechanical stress and humidity

PS-PROTECTION
PERFECT SENSOR PROTECTION

THERMASGARD® TF 65	Temperature sensors (Basic device with quick-locking screws), *Premium*	
Type / WG03 / EL	**Sensor / Output**	**Item No.**
TF 65 LM235Z xx	**LM235Z**	**IP65**
TF65 LM235Z 50MM	LM235Z (TCR = 10 mV / K; 2.73 V at 0 °C), KP10	1101-7022-1011-000
TF65 LM235Z 100MM	LM235Z (TCR = 10 mV / K; 2.73 V at 0 °C), KP10	1101-7022-1021-000
TF65 LM235Z 150MM	LM235Z (TCR = 10 mV / K; 2.73 V at 0 °C), KP10	1101-7022-1031-000
TF65 LM235Z 200MM	LM235Z (TCR = 10 mV / K; 2.73 V at 0 °C), KP10	1101-7022-1041-000
TF65 LM235Z 250MM	LM235Z (TCR = 10 mV / K; 2.73 V at 0 °C), KP10	1101-7022-1051-000
TF65 LM235Z 300MM	LM235Z (TCR = 10 mV / K; 2.73 V at 0 °C), KP10	1101-7022-1061-000
TF65 LM235Z 350MM	LM235Z (TCR = 10 mV / K; 2.73 V at 0 °C), KP10	1101-7022-1071-000
TF65 LM235Z 400MM	LM235Z (TCR = 10 mV / K; 2.73 V at 0 °C), KP10	1101-7022-1081-000
TF 65 NTC 1.8 K xx	**NTC 1.8 K**	**IP65**
TF65 NTC1,8K 50MM	NTC 1.8 K	1101-7021-2011-000
TF65 NTC1,8K 100MM	NTC 1.8 K	1101-7021-2021-000
TF65 NTC1,8K 150MM	NTC 1.8 K	1101-7021-2031-000
TF65 NTC1,8K 200MM	NTC 1.8 K	1101-7021-2041-000
TF65 NTC1,8K 250MM	NTC 1.8 K	1101-7021-2051-000
TF65 NTC1,8K 300MM	NTC 1.8 K	1101-7021-2061-000
TF65 NTC1,8K 350MM	NTC 1.8 K	1101-7021-2071-000
TF65 NTC1,8K 400MM	NTC 1.8 K	1101-7021-2081-000
TF 65 NTC10K xx	**NTC 10K**	**IP65**
TF65 NTC10K 50MM	NTC 10K	1101-7021-5011-000
TF65 NTC10K 100MM	NTC 10K	1101-7021-5021-000
TF65 NTC10K 150MM	NTC 10K	1101-7021-5031-000
TF65 NTC10K 200MM	NTC 10K	1101-7021-5041-000
TF65 NTC10K 250MM	NTC 10K	1101-7021-5051-000
TF65 NTC10K 300MM	NTC 10K	1101-7021-5061-000
TF65 NTC10K 350MM	NTC 10K	1101-7021-5071-000
TF65 NTC10K 400MM	NTC 10K	1101-7021-5081-000
TF 65 NTC20K xx	**NTC 20K**	**IP65**
TF65 NTC20K 50MM	NTC 20K	1101-7021-6011-000
TF65 NTC20K 100MM	NTC 20K	1101-7021-6021-000
TF65 NTC20K 150MM	NTC 20K	1101-7021-6031-000
TF65 NTC20K 200MM	NTC 20K	1101-7021-6041-000
TF65 NTC20K 250MM	NTC 20K	1101-7021-6051-000
TF65 NTC20K 300MM	NTC 20K	1101-7021-6061-000
TF65 NTC20K 350MM	NTC 20K	1101-7021-6071-000
TF65 NTC20K 400MM	NTC 20K	1101-7021-6081-000
Note:	Other sensors optional	on request

TF 65
with quick-locking screws
(IP 65)



THERMASGARD® TF 43	Temperature sensors (Basic device with snap-on lid), *Standard*	
Type / WG03 / EL	**Sensor / Output**	**Item No.**
TF43 PT100 xx	**Pt100**	**IP43**
TF43 PT100 50MM	Pt100 (according to DIN EN 60 751, class B)	1101-7010-1013-000
TF43 PT100 100MM	Pt100 (according to DIN EN 60 751, class B)	1101-7010-1023-000
TF43 PT100 150MM	Pt100 (according to DIN EN 60 751, class B)	1101-7010-1033-000
TF43 PT100 200MM	Pt100 (according to DIN EN 60 751, class B)	1101-7010-1043-000
TF43 PT100 250MM	Pt100 (according to DIN EN 60 751, class B)	1101-7010-1053-000
TF43 PT100 300MM	Pt100 (according to DIN EN 60 751, class B)	1101-7010-1063-000
TF43 PT100 350MM	Pt100 (according to DIN EN 60 751, class B)	1101-7010-1073-000
TF43 PT100 400MM	Pt100 (according to DIN EN 60 751, class B)	1101-7010-1083-000
TF43 PT1000 xx	**Pt1000**	**IP43**
TF43 PT1000 50MM	Pt1000 (according to DIN EN 60 751, class B)	1101-7010-5011-000
TF43 PT1000 100MM	Pt1000 (according to DIN EN 60 751, class B)	1101-7010-5021-000
TF43 PT1000 150MM	Pt1000 (according to DIN EN 60 751, class B)	1101-7010-5031-000
TF43 PT1000 200MM	Pt1000 (according to DIN EN 60 751, class B)	1101-7010-5041-000
TF43 PT1000 250MM	Pt1000 (according to DIN EN 60 751, class B)	1101-7010-5051-000
TF43 PT1000 300MM	Pt1000 (according to DIN EN 60 751, class B)	1101-7010-5061-000
TF43 PT1000 350MM	Pt1000 (according to DIN EN 60 751, class B)	1101-7010-5071-000
TF43 PT1000 400MM	Pt1000 (according to DIN EN 60 751, class B)	1101-7010-5081-000
TF43 Ni1000 xx	**Ni 1000**	**IP43**
TF43 NI1000 50MM	Ni1000 (according to DIN EN 43 760, class B, TCR = 6180 ppm / K)	1101-7010-9011-000
TF43 NI1000 100MM	Ni1000 (according to DIN EN 43 760, class B, TCR = 6180 ppm / K)	1101-7010-9021-000
TF43 NI1000 150MM	Ni1000 (according to DIN EN 43 760, class B, TCR = 6180 ppm / K)	1101-7010-9031-000
TF43 NI1000 200MM	Ni1000 (according to DIN EN 43 760, class B, TCR = 6180 ppm / K)	1101-7010-9041-000
TF43 NI1000 250MM	Ni1000 (according to DIN EN 43 760, class B, TCR = 6180 ppm / K)	1101-7010-9051-000
TF43 NI1000 300MM	Ni1000 (according to DIN EN 43 760, class B, TCR = 6180 ppm / K)	1101-7010-9061-000
TF43 NI1000 350MM	Ni1000 (according to DIN EN 43 760, class B, TCR = 6180 ppm / K)	1101-7010-9071-000
TF43 NI1000 400MM	Ni1000 (according to DIN EN 43 760, class B, TCR = 6180 ppm / K)	1101-7010-9081-000
TF43 NI1000TK xx	**Ni1000 TK5000**	**IP43**
TF43 NITK 50MM	Ni1000 TK5000 (TCR = 5000 ppm / K), LG-Ni1000	1101-7011-0011-000
TF43 NITK 100MM	Ni1000 TK5000 (TCR = 5000 ppm / K), LG-Ni1000	1101-7011-0021-000
TF43 NITK 150MM	Ni1000 TK5000 (TCR = 5000 ppm / K), LG-Ni1000	1101-7011-0031-000
TF43 NITK 200MM	Ni1000 TK5000 (TCR = 5000 ppm / K), LG-Ni1000	1101-7011-0041-000
TF43 NITK 250MM	Ni1000 TK5000 (TCR = 5000 ppm / K), LG-Ni1000	1101-7011-0051-000
TF43 NITK 300MM	Ni1000 TK5000 (TCR = 5000 ppm / K), LG-Ni1000	1101-7011-0061-000
TF43 NITK 350MM	Ni1000 TK5000 (TCR = 5000 ppm / K), LG-Ni1000	1101-7011-0071-000
TF43 NITK 400MM	Ni1000 TK5000 (TCR = 5000 ppm / K), LG-Ni1000	1101-7011-0081-000

Continued on next page...

High-performance encapsulation against vibration, mechanical stress and humidity

PS-PROTECTION
PERFECT SENSOR PROTECTION

THERMASGARD® TF 43	Temperature sensors (Basic device with snap-on lid), *Standard*	
Type / WG03 / EL	**Sensor / Output**	**Item No.**
TF 43 LM235Z xx	**LM235Z**	**IP43**
TF43 LM235Z 50MM	LM235Z (TCR = 10 mV / K; 2.73 V at 0 °C), KP10	1101-7012-1011-000
TF43 LM235Z 100MM	LM235Z (TCR = 10 mV / K; 2.73 V at 0 °C), KP10	1101-7012-1021-000
TF43 LM235Z 150MM	LM235Z (TCR = 10 mV / K; 2.73 V at 0 °C), KP10	1101-7012-1031-000
TF43 LM235Z 200MM	LM235Z (TCR = 10 mV / K; 2.73 V at 0 °C), KP10	1101-7012-1041-000
TF43 LM235Z 250MM	LM235Z (TCR = 10 mV / K; 2.73 V at 0 °C), KP10	1101-7012-1051-000
TF43 LM235Z 300MM	LM235Z (TCR = 10 mV / K; 2.73 V at 0 °C), KP10	1101-7012-1061-000
TF43 LM235Z 350MM	LM235Z (TCR = 10 mV / K; 2.73 V at 0 °C), KP10	1101-7012-1071-000
TF43 LM235Z 400MM	LM235Z (TCR = 10 mV / K; 2.73 V at 0 °C), KP10	1101-7012-1081-000
TF 43 NTC 1.8 K xx	**NTC 1.8 K**	**IP43**
TF43 NTC1,8K 50MM	NTC 1.8 K	1101-7011-2011-000
TF43 NTC1,8K 100MM	NTC 1.8 K	1101-7011-2021-000
TF43 NTC1,8K 150MM	NTC 1.8 K	1101-7011-2031-000
TF43 NTC1,8K 200MM	NTC 1.8 K	1101-7011-2041-000
TF43 NTC1,8K 250MM	NTC 1.8 K	1101-7011-2051-000
TF43 NTC1,8K 300MM	NTC 1.8 K	1101-7011-2061-000
TF43 NTC1,8K 350MM	NTC 1.8 K	1101-7011-2071-000
TF43 NTC1,8K 400MM	NTC 1.8 K	1101-7011-2081-000
TF 43 NTC10K xx	**NTC 10K**	**IP43**
TF43 NTC10K 50MM	NTC 10K	1101-7011-5011-000
TF43 NTC10K 100MM	NTC 10K	1101-7011-5021-000
TF43 NTC10K 150MM	NTC 10K	1101-7011-5031-000
TF43 NTC10K 200MM	NTC 10K	1101-7011-5041-000
TF43 NTC10K 250MM	NTC 10K	1101-7011-5051-000
TF43 NTC10K 300MM	NTC 10K	1101-7011-5061-000
TF43 NTC10K 350MM	NTC 10K	1101-7011-5071-000
TF43 NTC10K 400MM	NTC 10K	1101-7011-5081-000
TF43 NTC20K xx	**NTC 20K**	**IP43**
TF43 NTC20K 50MM	NTC 20K	1101-7011-6011-000
TF43 NTC20K 100MM	NTC 20K	1101-7011-6021-000
TF43 NTC20K 150MM	NTC 20K	1101-7011-6031-000
TF43 NTC20K 200MM	NTC 20K	1101-7011-6041-000
TF43 NTC20K 250MM	NTC 20K	1101-7011-6051-000
TF43 NTC20K 300MM	NTC 20K	1101-7011-6061-000
TF43 NTC20K 350MM	NTC 20K	1101-7011-6071-000
TF43 NTC20K 400MM	NTC 20K	1101-7011-6081-000
Note	Other sensors optional	on request

TF 43
with snap-on lid
(IP 43)



Immersion / screw-in / duct temperature sensors with passive output

S+S REGELTECHNIK

One basic device in four variants ...





PATENTED





TFxx +
TH08-ms/xx

Immersion / screw-in temperature sensor with immersion sleeve, brass, nickel-plated

TFxx +
TH08-VA/xx

Immersion / screw-in temperature sensor with immersion sleeve, stainless steel, V4A

TFxx +
TH08-VA/xx/90

Immersion / screw-in temperature sensor with immersion sleeve with neck tube, stainless steel, V4A

TFxx +
MF-15-K

Duct temperature sensor with mounting flange, plastic

Dimensional drawing
TH08-ms/xx

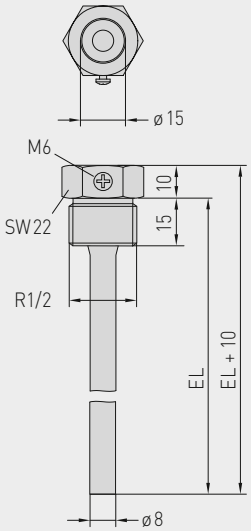

Dimensional drawing
TH08-VA/xx

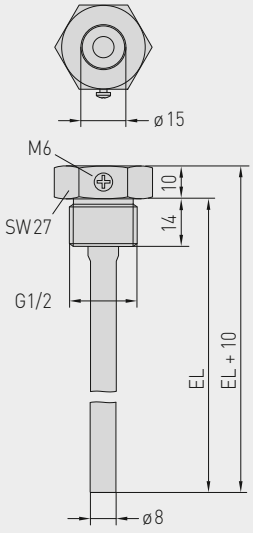

Dimensional drawing
TH08-VA/xx/90

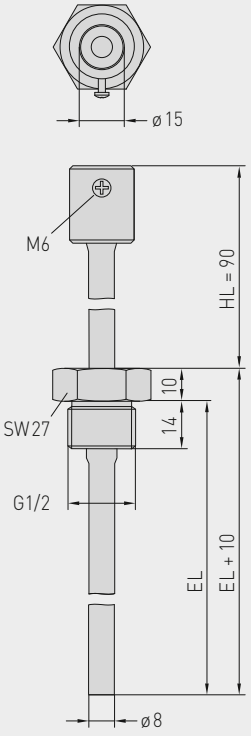

Dimensional drawing
MF-15-K

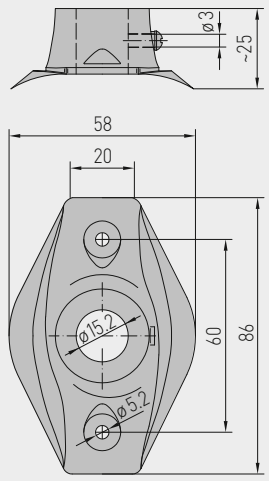

...through combination with accessories:



TH08-ms/xx
Immersion sleeve, brass, nickel-plated, thread-sealing, conical, according to DIN 10226



TH08-VA/xx
Immersion sleeve, stainless steel, V4A, flat-sealing, cylindrical, according to DIN 228



TH08-VA/xx/90
Immersion sleeve with neck tube, stainless steel, V4A, flat-sealing, cylindrical, according to DIN 228



MF-15-K
Mounting flange, plastic

THERMASGARD® TH08	Immersion sleeve Ø 8 mm (Accessories)			
Type / WG01B	**p_{max} (static)**	**T_{max}**	**Inserted Length (EL)**	**Item No.**
TH08-ms/xx	**Brass, nickel-plated**			without neck tube
TH08-MS 50MM	10 bar	+150 °C	**50 mm**	7100-0011-0010-132
TH08-MS 100MM	10 bar	+150 °C	**100 mm**	7100-0011-0020-132
TH08-MS 150MM	10 bar	+150 °C	**150 mm**	7100-0011-0030-132
TH08-MS 200MM	10 bar	+150 °C	**200 mm**	7100-0011-0040-132
TH08-MS 250MM	10 bar	+150 °C	**250 mm**	7100-0011-0050-132
TH08-MS 300MM	10 bar	+150 °C	**300 mm**	7100-0011-0060-132
TH08-MS 350MM	10 bar	+150 °C	**350 mm**	7100-0011-0070-132
TH08-MS 400MM	10 bar	+150 °C	**400 mm**	7100-0011-0080-132
TH08-VA/xx	**Stainless steel, V4A** (1.4571)			without neck tube
TH08-VA 50MM	40 bar	+600 °C	**50 mm**	7100-0012-0010-132
TH08-VA 100MM	40 bar	+600 °C	**100 mm**	7100-0012-0020-132
TH08-VA 150MM	40 bar	+600 °C	**150 mm**	7100-0012-0030-132
TH08-VA 200MM	40 bar	+600 °C	**200 mm**	7100-0012-0040-132
TH08-VA 250MM	40 bar	+600 °C	**250 mm**	7100-0012-0050-132
TH08-VA 300MM	40 bar	+600 °C	**300 mm**	7100-0012-0060-132
TH08-VA 350MM	40 bar	+600 °C	**350 mm**	7100-0012-0070-132
TH08-VA 400MM	40 bar	+600 °C	**400 mm**	7100-0012-0080-132
TH08-VA/xx/90	**Stainless steel, V4A** (1.4571)			**with neck tube** (90 mm)
TH08-VA 50/90MM	40 bar	+600 °C	**50 mm**	7100-0012-0012-132
TH08-VA 100/90MM	40 bar	+600 °C	**100 mm**	7100-0012-0022-132
TH08-VA 150/90MM	40 bar	+600 °C	**150 mm**	7100-0012-0032-132
TH08-VA 200/90MM	40 bar	+600 °C	**200 mm**	7100-0012-0042-132
TH08-VA 250/90MM	40 bar	+600 °C	**250 mm**	7100-0012-0052-132
TH08-VA 300/90MM	40 bar	+600 °C	**300 mm**	7100-0012-0062-132
Note:	inner diameter of socket 15.0 mm For further information see last chapter!			

Mounting flange (Accessories)			
Type / WG01B		**T_{max}**	**Item No.**
MF			
MF-15-K	**Mounting flange,** plastic, 56.8 x 84.3 mm, Ø 15.2 mm tube gland	+100 °C	7100-0032-0000-000
Note:	For further information see last chapter!		

THERMASGARD® TF 43-F
THERMASGARD® TF 65-F

Flexible sleeve / cable temperature sensors, immersion / screw-in temperature sensors, with passive output

S+S REGELTECHNIK

Patented quality product (Immersion sensor patent no. DE 10 2012 017 500.0)

THERMASGARD® **TF 43-F** is a resistance thermometer with a passive output, enclosure made from impact-resistant plastic with snap-on lid, with sensor sleeve and flexible cable length.

THERMASGARD® **TF 65-F** s a resistance thermometer with a passive output, enclosure made from impact-resistant plastic with quick-locking screws, with sensor sleeve and flexible cable length.

These built-in temperature sensors / immersion temperature sensors are electric contact thermometers for temperature measurement in liquids and gases, which are installed for example in piping systems and vessels. For aggressive media, stainless steel immersion sleeves must be used. Applications of these temperature sensors in piping systems, in heating technology, in storage tanks, in district heating compact stations, in hot and cold-water systems, in oil and lubricant circulation systems, in mechanical, apparatus and plant engineering as well as in the entire industrial sector.

1x two-wire connection
Standard

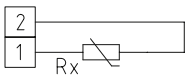

1x two-wire connection
LM 235 Z (KP 10)

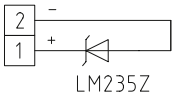

1x four-wire connection
(optional)

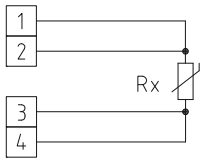

TECHNICAL DATA

Measuring range:	–50...+180 °C
Sensors / output:	see table, passive (**Perfect Sensor Protection**) (optional also with two sensors)
Connection type:	2-wire connection (4-wire connection optional)
Testing current:	< 0.6 mA (Pt1000) < 0.3 mA (Ni1000)
Insulating resistance:	≥ 100 MΩ, at +20 °C (500 V DC)
Ambient temperature:	–20...+100 °C
Enclosure:	plastic, UV-stabilised, material polyamide, 30 % glass-globe reinforced, colour traffic white (similar to RAL 9016) **TF 43-F with snap-on lid** **TF 65-F with quick-locking screws** (slotted / Phillips head combination)
Enclosure dimensions:	72 x 64 x 37.8 mm (Tyr 1 / Tyr 01)
Cable gland:	M 16 x 1.5; including strain relief, exchangeable, max. inner diameter 10.4 mm
Electrical connection:	0.14 - 1.5 mm², via terminal screws
Connecting cable:	silicone, SiHF, 2 x 0.25 mm², cable length (KL) = flexible, inserted length (EL) > 50 mm
Sensor sleeve:	stainless steel **V4A** (1.4571), Ø = 6 mm, nominal length = 50 mm, cable entry stamped (rolled as an option)
Permissible humidity:	< 95 % r. H., non-precipitating air
Protection class:	III (according to EN 60 730)
Protection type:	**TF 43-F IP 43** (according to EN 60 529) in the built-in state **TF 65-F IP 65** (according to EN 60 529) in the built-in state
ACCESSORIES	
TH 08-ms / xx	**Immersion sleeve,** brass, nickel-plated, Ø = 8 mm, T_{max} = +150 °C, p_{max} = 10 bar
TH 08-VA / xx	**Immersion sleeve,** stainless steel, **V4A** (1.4571), Ø = 8 mm, T_{max} = +600 °C, p_{max} = 40 bar
TH 08-VA / xx / 90	**Immersion sleeve,** stainless steel, **V4A** (1.4571), with neck tube (90 mm), Ø = 8 mm, T_{max} = +600 °C, p_{max} = 40 bar





Sensor sleeve humidity-tight **stamped** (standard)



Sensor sleeve watertight compound-filled, **rolled** (optional)

High-performance encapsulation against vibration, mechanical stress and humidity

PS-PROTECTION
PERFECT SENSOR PROTECTION

Dimensional drawing

TF 43-F
TF 65-F

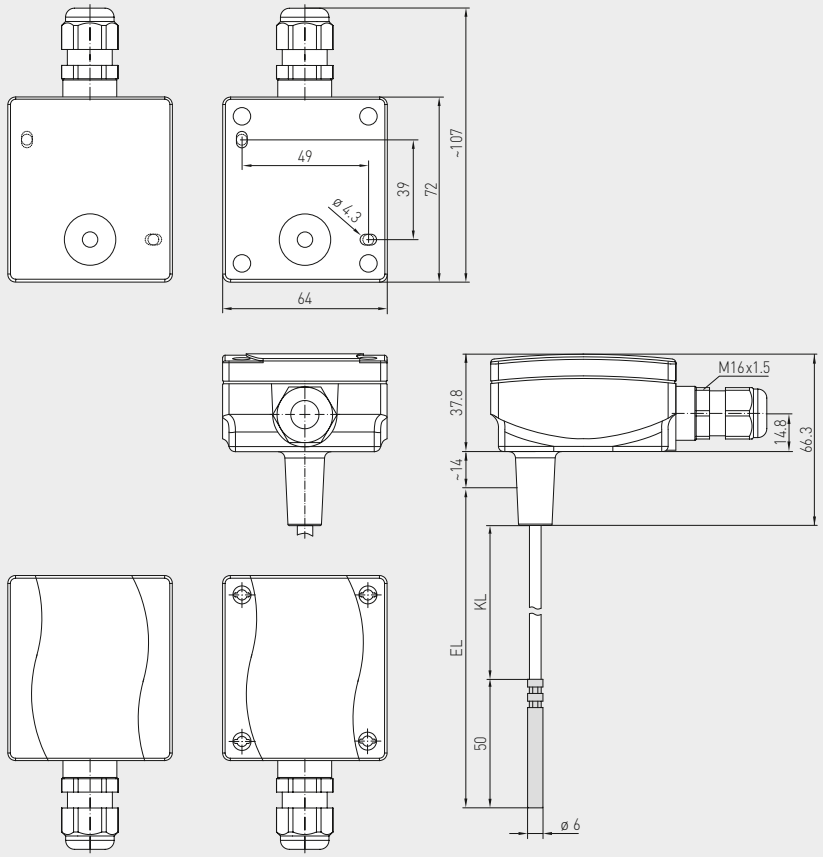

with snap-on lid
(IP 43)

with quick-locking screws
(IP 65)



TF 43-F
with snap-on lid
(IP 43)



TF 65-F
with quick-locking screws
(IP 65)

THERMASGARD® **TF 43-F** Flexible cable temperature sensor (basic unit with snap-on lid), *Standard*		
Type / WG01 / EL	**Sensor / Output**	**Sensor / Output**
TF 43-F PT1000 xx		**IP 43**
TF43-F PT1000 250MM	Pt1000 (according to DIN EN 60 751, class B)	1101-3080-5051-000
TF43-F PT1000 450MM	Pt1000 (according to DIN EN 60 751, class B)	1101-3080-5091-000
TF 43-F Ni1000 xx		**IP 43**
TF43-F NI1000 250MM	Ni1000 (according to DIN EN 43 760, class B, TCR = 6180 ppm / K)	1101-3080-9051-000
TF43-F NI1000 450MM	Ni1000 (according to DIN EN 43 760, class B, TCR = 6180 ppm / K)	1101-3080-9091-000
Note:	**flexible cable length (EL > 50 mm)**	

THERMASGARD® **TF 65-F** Flexible cable temperature sensor (basic unit with quick-locking screws), *Premium*		
Type / WG01 / EL	**Sensor / Output**	**Sensor / Output**
TF 65-F PT1000 xx		**IP 65**
TF65-F PT1000 250MM	Pt1000 (according to DIN EN 60 751, class B)	1101-3060-5051-000
TF65-F PT1000 450MM	Pt1000 (according to DIN EN 60 751, class B)	1101-3060-5091-000
TF 65-F Ni1000 xx		**IP 65**
TF65-F NI1000 250MM	Ni1000 (according to DIN EN 43 760, class B, TCR = 6180 ppm / K)	1101-3060-9051-000
TF65-F NI1000 450MM	Ni1000 (according to DIN EN 43 760, class B, TCR = 6180 ppm / K)	1101-3060-9091-000
Extra charge:	Other sensors and cable lengths optional	on request
Note:	**flexible cable length (EL > 50 mm)**	

THERMASGARD® TF 43-F
THERMASGARD® TF 65-F

Flexible sleeve / cable temperature sensors, immersion / screw-in temperature sensors, with passive output

S+S REGELTECHNIK

A basic unit with flexible cable length in three variants...





PATENTED





TFxx-F +
TH08-ms/xx

Immersion / screw-in temperature sensor with immersion sleeve, brass, nickel-plated

TFxx-F +
TH08-VA/xx

Immersion / screw-in temperature sensor with immersion sleeve, stainless steel, V4A

TFxx-F +
TH08-VA/xx/90

Immersion / screw-in temperature sensor with immersion sleeve with neck tube, stainless steel, V4A

TFxx-F
Basic unit

Flexible cable length through cable entry in the enclosure



Dimensional drawing
TH08-ms/xx

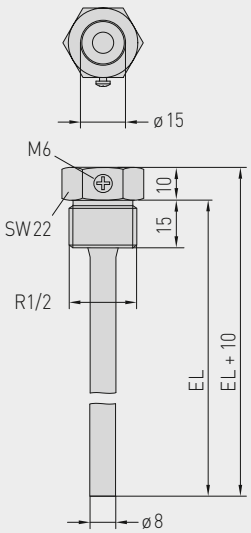

Dimensional drawing
TH08-VA/xx

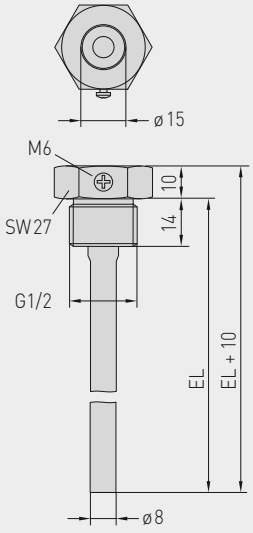

Dimensional drawing
TH08-VA/xx/90

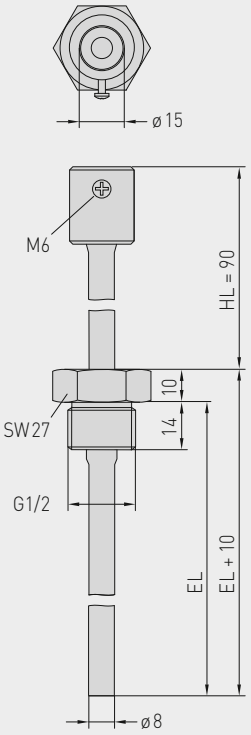

...through combination with accessories:



TH 08 - ms / xx

Immersion sleeve,
brass, nickel-plated,
thread-sealing, conical,
according to DIN 10226



TH 08 - VA / xx

Immersion sleeve,
stainless steel, V4A,
flat-sealing, cylindrical,
according to DIN 228



TH 08 - VA / xx / 90

Immersion sleeve with neck tube,
stainless steel, V4A,
flat-sealing, cylindrical,
according to DIN 228

THERMASGARD® TH 08	Immersion sleeve Ø 8 mm (Accessories)			
Type / WG01B	**p_{max} (static)**	**T_{max}**	**Inserted Length (EL)**	**Item No.**
TH 08 - ms / xx	**Brass, nickel-plated**			without neck tube
TH08-MS 50MM	10 bar	+150 °C	**50 mm**	7100-0011-0010-132
TH08-MS 100MM	10 bar	+150 °C	**100 mm**	7100-0011-0020-132
TH08-MS 150MM	10 bar	+150 °C	**150 mm**	7100-0011-0030-132
TH08-MS 200MM	10 bar	+150 °C	**200 mm**	7100-0011-0040-132
TH08-MS 250MM	10 bar	+150 °C	**250 mm**	7100-0011-0050-132
TH08-MS 300MM	10 bar	+150 °C	**300 mm**	7100-0011-0060-132
TH08-MS 350MM	10 bar	+150 °C	**350 mm**	7100-0011-0070-132
TH08-MS 400MM	10 bar	+150 °C	**400 mm**	7100-0011-0080-132
TH 08 - VA / xx	**Stainless steel, V4A** (1.4571)			without neck tube
TH08-VA 50MM	40 bar	+600 °C	**50 mm**	7100-0012-0010-132
TH08-VA 100MM	40 bar	+600 °C	**100 mm**	7100-0012-0020-132
TH08-VA 150MM	40 bar	+600 °C	**150 mm**	7100-0012-0030-132
TH08-VA 200MM	40 bar	+600 °C	**200 mm**	7100-0012-0040-132
TH08-VA 250MM	40 bar	+600 °C	**250 mm**	7100-0012-0050-132
TH08-VA 300MM	40 bar	+600 °C	**300 mm**	7100-0012-0060-132
TH08-VA 350MM	40 bar	+600 °C	**350 mm**	7100-0012-0070-132
TH08-VA 400MM	40 bar	+600 °C	**400 mm**	7100-0012-0080-132
TH 08 - VA / xx / 90	**Stainless steel, V4A** (1.4571)			**with neck tube** (90 mm)
TH08-VA 50/90MM	40 bar	+600 °C	**50 mm**	7100-0012-0012-132
TH08-VA 100/90MM	40 bar	+600 °C	**100 mm**	7100-0012-0022-132
TH08-VA 150/90MM	40 bar	+600 °C	**150 mm**	7100-0012-0032-132
TH08-VA 200/90MM	40 bar	+600 °C	**200 mm**	7100-0012-0042-132
TH08-VA 250/90MM	40 bar	+600 °C	**250 mm**	7100-0012-0052-132
TH08-VA 300/90MM	40 bar	+600 °C	**300 mm**	7100-0012-0062-132
Note:	inner diameter of socket 15.0 mm For further information see last chapter!			

THERMASGARD® MWTF

Mean value / rod / duct temperature sensor including mounting flange, with passive output

S+S REGELTECHNIK

Sturdy mean value temperature sensor **THERM**ASGARD® **MWTF** (rod sensor) with passive output, fully active flexible sensor rod for mean value measurement, plastic-coated copper protective tube, terminal box enclosure made of impact-resistant plastic and enclosure cover with quick-locking screws.

This sensor is used to measure average temperatures (mean values) in gaseous media, e.g. in ventilation and air conditioning ducts as air duct temperature sensor over the entire cross section, or over a defined length. Laid along a meandering route, it uniformly detects the surrounding temperature. This mean value sensor is available in lengths of 0.4...20 m and is delivered as standard with a mounting flange. Mounting clamps **MK-05-M** may be added to the order as optional accessories.

TECHNICAL DATA

Measuring range:	–30...+80 °C
Sensors / output:	see table, passive
Connection type:	2-wire connection (4-wire connection on PT100 / PT1000A, optional on other sensors)
Testing current:	< 0.6 mA (Pt1000) < 1.0 mA (Pt100) < 0.3 mA (Ni1000) (wire measuring resistor)
Sleeve:	stainless steel **V4A** (1.4571)
Rod material:	**copper, plastic-coated,** with spring for buckling protection
Sensor and rod dimensions:	Ø = 5.0 mm, nominal length (NL) = 0.4 m / 3 m / 6 m (optional up to 20 m)
Enclosure:	plastic, UV-stabilised, material polyamide, 30 % glass-globe reinforced, with quick-locking screws (slotted / Phillips head combination), colour traffic white (similar to RAL 9016), ambient temperature –20...+80 °C
Enclosure dimensions:	72 x 64 x 37.8 mm (Tyr 1)
Cable gland:	M 16 x 1.5, including strain relief, exchangeable, max. inner diameter 10.4 mm
Electrical connection:	0.14 - 1.5 mm² via terminal screws
Installation:	observe minimum bending radius of 35 mm and permissible vibration loads ≤ ½ g
Process connection:	by mounting flange, plastic, (galvanised steel optional, see accessories) and mounting clamps **MK-05-M**
Sensor:	active over the entire length (averaging)
Humidity:	< 95 % r. H., non-precipitating air
Protection class:	III (according to EN 60 730)
Protection type:	IP 65 (according to EN 60 529)

MWTF





1x two-wire connection
standard

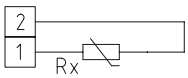

1x four-wire connection
(optional)

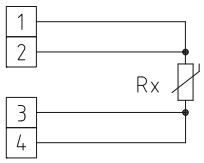





Dimensional drawing **KRD-04**

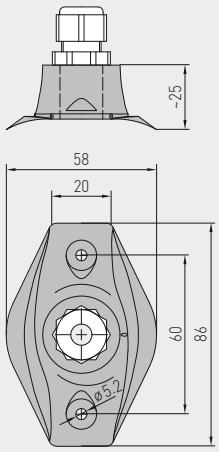

Dimensional drawing **MK-05-M**

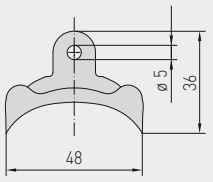

Dimensional drawing **MWTF**
MF-06-K

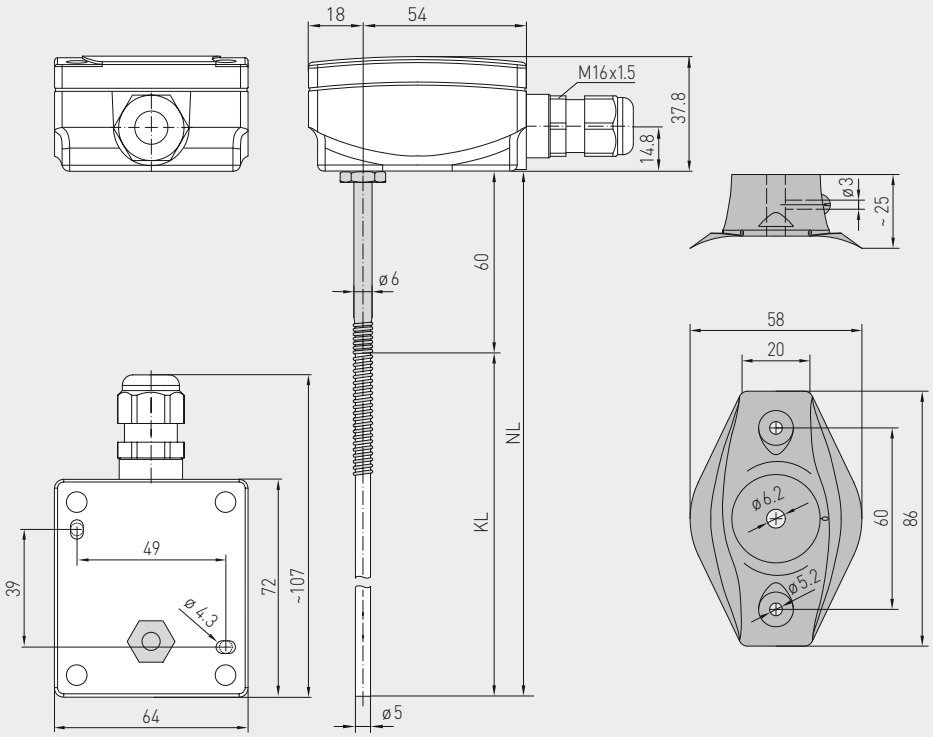

MK-05-M



KRD-04



MF-06-K



THERMASGARD® MWTF Mean value / rod / duct temperature sensor			
Type / WG03	**Sensor / Output**	**Rod Length**	**Item No.**
MWTF	**Pt 100**		**IP 65**
MWTF PT100 0,4M	Pt100 (according to DIN EN 60 751, class B)	**0.4 m**	1101-3050-1083-000
MWTF PT100 3M	Pt100 (according to DIN EN 60 751, class B)	**3.0 m**	1101-3050-1233-000
MWTF PT100 6M	Pt100 (according to DIN EN 60 751, class B)	**6.0 m**	1101-3050-1263-000
MWTF	**Pt 1000**		**IP 65**
MWTF PT1000 0,4M	Pt1000 (according to DIN EN 60 751, class B)	**0.4 m**	1101-3050-5081-000
MWTF PT1000 3M	Pt1000 (according to DIN EN 60 751, class B)	**3.0 m**	1101-3050-5231-000
MWTF PT1000 6M	Pt1000 (according to DIN EN 60 751, class B)	**6.0 m**	1101-3050-5261-000
MWTF	**Ni 1000**		**IP 65**
MWTF NI1000 0,4M	Ni1000 (according to DIN EN 43 760, class B)	**0.4 m**	1101-3050-9081-000
MWTF NI1000 3M	Ni1000 (according to DIN EN 43 760, class B)	**3.0 m**	1101-3050-9231-000
MWTF NI1000 6M	Ni1000 (according to DIN EN 43 760, class B)	**6.0 m**	1101-3050-9261-000
Extra charge:	Per meter sensor cable (from 6 m to max. 20 m)		on request

Accessories		
MF-06-K	**Mounting flange,** plastic (included in the scope of delivery)	7100-0030-1000-000
KRD-04	**Capillary tube gland bracket,** plastic	7100-0030-7000-000
MK-05-M	**Mounting clamps,** galvanised steel (6 pieces) (for NL = 3.0 m / 6.0 m included in the scope of delivery)	7100-0034-0000-000
	For further information see last chapter!	

THERMASGARD® ETF 7

Screw-in / immersion temperature sensors
with neck tube (stepped once)
with passive output

S+S REGELTECHNIK

Very quickly responding screw-in resistance thermometer / immersion temperature sensor **THERM**ASGARD® **ETF 7** with passive output, neck tube and a single-tapered stainless steel protective tube, enclosure cover with quick-locking screws, very short reaction time, particularly suitable for very quick temperature changes and control operations, e.g. in hydraulic systems.

ETF 7



TECHNICAL DATA

Measuring range:	–35...+150 °C
Sensors / output:	see table, passive (**Perfect Sensor Protection**)
Connection type:	2-wire connection (4-wire connection on PT100/PT1000A, optional on other sensors)
Response times:	$t_{0.5}$ = 2.8 s $t_{0.9}$ = 10 s (for water at a flow rate of 2 m/s)
Testing current:	< 0.6 mA (Pt1000) < 1.0 mA (Pt100) < 0.3 mA (Ni1000, Ni1000 TK5000)
Insulating resistance:	≥ 100 MΩ, at +20 °C (500 V DC)
Enclosure:	plastic, UV-stabilised, material polyamide, 30 % glass-globe reinforced, with quick-locking screws (slotted / Phillips head combination), colour traffic white (similar to RAL 9016)
Enclosure dimensions:	72 x 64 x 37.8 mm (Tyr 1)
Cable gland:	M 16 x 1.5, including strain relief, exchangeable, max. inner diameter 10.4 mm
Electrical connection:	0.14 - 2.5 mm² via terminal screws
Process connection:	screwed socket with G ½" straight pipe thread
Protective tube:	stainless steel **V4A** (1.4571), G ½" straight pipe thread, wrench size 27 mm, p_{max} = 6 bar, Ø = 6 mm, single-tapered to Ø = 4 mm (see dimensional drawing) length of neck tube (HL) = 25 mm inserted length (EL) = 100 - 250 mm (see table)
Humidity:	< 95 % r. H., non-precipitating air
Protection class:	III (according to EN 60 730)
Protection type:	IP 65 (according to EN 60 529)

1x two-wire connection
standard

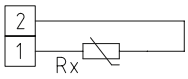

1x two-wire connection
LM 235 Z (KP 10)

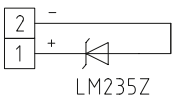

1x four-wire connection
(optional)

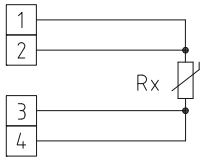

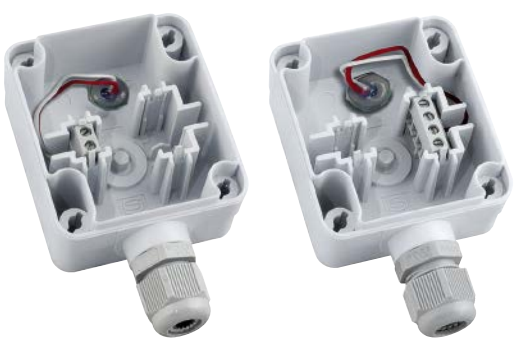

High-performance encapsulation against vibration, mechanical stress and humidity

PS-PROTECTION
PERFECT SENSOR PROTECTION

Dimensional drawing ETF 7

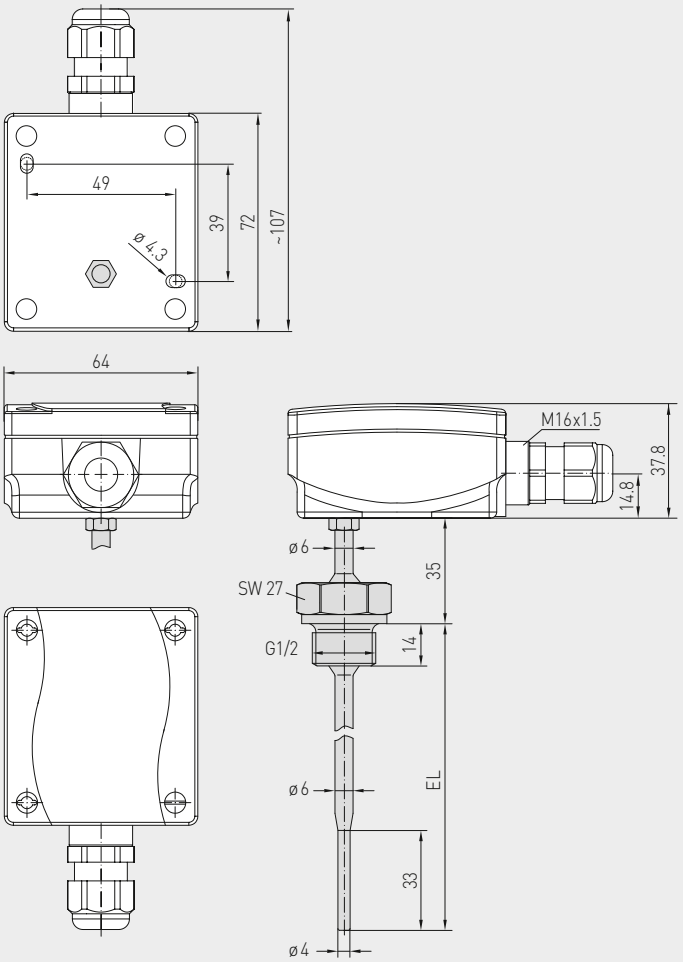

ETF 7



THERMASGARD® ETF 7	Screw-in / immersion temperature sensor with neck tube	
Type / WG01	**Sensor / Output**	**Item No.**
ETF7 PT100 xx	**Pt100**	**IP65**
ETF7 PT100 100MM	Pt100 (according to DIN EN 60751, class B)	1101-2080-1023-000
ETF7 PT100 150MM	Pt100 (according to DIN EN 60751, class B)	1101-2080-1033-000
ETF7 PT100 250MM	Pt100 (according to DIN EN 60751, class B)	1101-2080-1053-000
ETF7 PT1000 xx	**Pt1000**	**IP65**
ETF7 PT1000 100MM	Pt1000 (according to DIN EN 60751, class B)	1101-2080-5021-000
ETF7 PT1000 150MM	Pt1000 (according to DIN EN 60751, class B)	1101-2080-5031-000
ETF7 PT1000 250MM	Pt1000 (according to DIN EN 60751, class B)	1101-2080-5051-000
ETF7 NI1000 xx	**Ni1000**	**IP65**
ETF7 NI1000 100MM	Ni1000 (according to DIN EN 43760, class B, TCR = 6180 ppm / K)	1101-2084-2021-000
ETF7 NI1000 150MM	Ni1000 (according to DIN EN 43760, class B, TCR = 6180 ppm / K)	1101-2084-2031-000
ETF7 NI1000 250MM	Ni1000 (according to DIN EN 43760, class B, TCR = 6180 ppm / K)	1101-2084-2051-000
ETF7 NI1000TK xx	**Ni1000 TK5000**	**IP65**
ETF7 NITK 100MM	Ni1000 TK5000 (TCR = 5000 ppm / K), LG-Ni1000	1101-2081-0021-000
ETF7 NITK 150MM	Ni1000 TK5000 (TCR = 5000 ppm / K), LG-Ni1000	1101-2081-0031-000
ETF7 NITK 250MM	Ni1000 TK5000 (TCR = 5000 ppm / K), LG-Ni1000	1101-2081-0051-000

S+S REGELTECHNIK

Immersion / screw-in / duct temperature sensor with passive output

Resistance thermometer / temperature sensor **THERM**ASGARD® **TF 54** with straight protective tube and connection head made of aluminium.

It is used for measuring temperatures in liquid or gaseous media, in piping systems, in vessels or storage tanks.

TF 54
Top view



TECHNICAL DATA

Measuring range:	–35...+180 °C (T_{max} NTC = +150 °C, T_{max} LM235Z = +125 °C)
Sensors / output:	see table, passive (**Perfect Sensor Protection**) (optional also with two sensors)
Connection type:	2-wire connection (4-wire connection on PT100 / PT1000A, optional on other sensors)
Testing current:	< 0.6 mA (Pt1000) < 1.0 mA (Pt100) < 0.3 mA (Ni1000, Ni1000 TK5000) < 2.0 mW (NTC xx) < 2.0 mA (KTY 81-210) 400 µA...5 mA (LM235Z)
Protective tube:	stainless steel, **V4A** (1.4571), Ø = 6 mm, inserted length (EL) = 50 - 400 mm (see table)
Dimensions:	see dimensional drawing
Connecting head:	form B, material aluminium, colour white aluminium (similar RAL 9006), ambient temperature –20...+100° C, M 20 x 1.5
Electrical connection:	0.14 - 2.5 mm² via terminal screws on ceramic base
Insulating resistance:	≥ 100 MΩ, at +20 °C (500 V DC)
Humidity:	< 95 % r. H., non-precipitating air
Protection class:	III (according to EN 60 730)
Protection type:	IP 54 (according to EN 60 529) IP 65 (optional)
Standards:	CE conformity, electromagnetic compatibility according to EN 61 326, EMC directive 2014 / 30 / EU
ACCESSORIES	
MF-06-M	**Mounting flange,** metal, galvanised steel, Ø = 32 mm, Ø = 6.3 mm tube gland, T_{max} = +700 °C
TH-ms / xx	**Immersion sleeve, brass, nickel-plated,** Ø = 8 mm, T_{max} = +150 °C, p_{max} = 10 bar
TH-VA / xx	**Immersion sleeve, stainless steel, V4A** (1.4571), Ø = 8 mm, T_{max} = +600 °C, p_{max} = 40 bar
TH-VA / xx / 90	**Immersion sleeve, stainless steel, V4A** (1.4571), with neck tube (90 mm), Ø = 8 mm, T_{max} = +600 °C, p_{max} = 40 bar

2-wire connection
(standard)



4-wire connection
(optional)



1x two-wire connection
standard

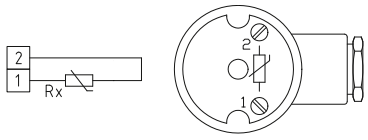

1x three-wire connection

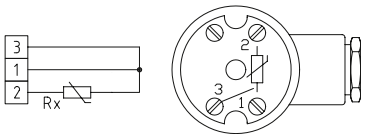

1x four-wire connection

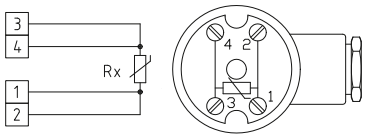

1x two-wire connection
LM 235 Z (KP 10)

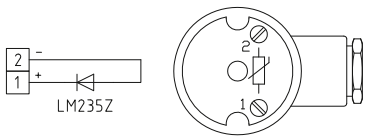

2x two-wire connection

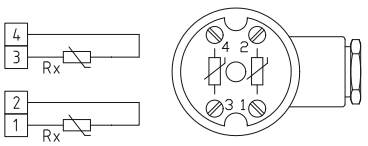

2x three-wire connection

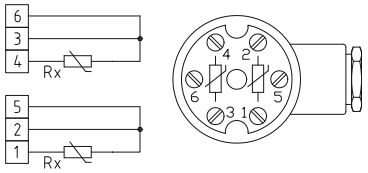

Dimensional drawing **TF 54**

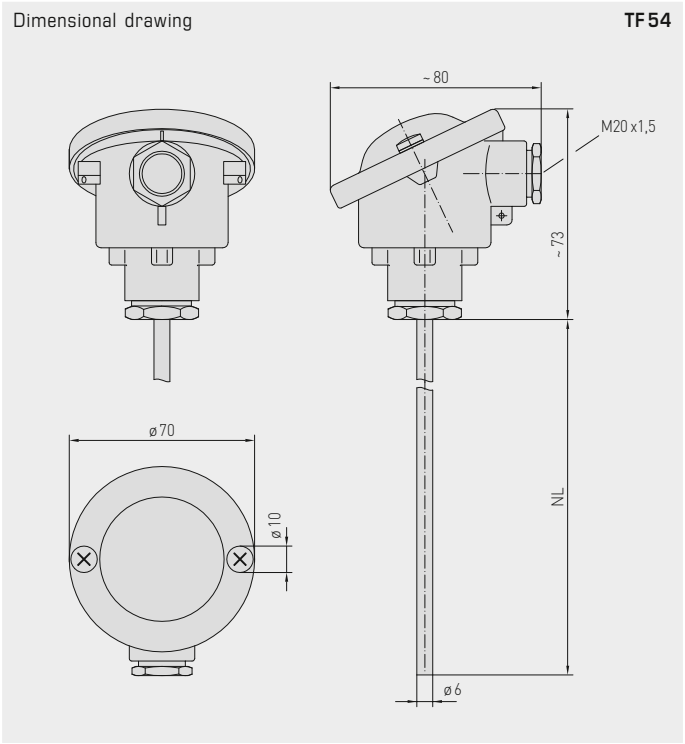

TF 54





TF 54
standard
(IP 54)



TF 54
optional
(IP 65)

High-performance encapsulation against vibration, mechanical stress and humidity

PS-PROTECTION
PERFECT SENSOR PROTECTION

THERMASGARD® TF 54	Temperature measuring transducers (basic device)	
Type / WG03 / EL	**Sensor / Output**	**Item No.**
TF 54 PT100 xx	**Pt100**	**IP 54**
TF54 PT100 50MM	Pt100 (according to DIN EN 60 751, class B)	1101-7050-1013-000
TF54 PT100 100MM	Pt100 (according to DIN EN 60 751, class B)	1101-7050-1023-000
TF54 PT100 150MM	Pt100 (according to DIN EN 60 751, class B)	1101-7050-1033-000
TF54 PT100 200MM	Pt100 (according to DIN EN 60 751, class B)	1101-7050-1043-000
TF54 PT100 250MM	Pt100 (according to DIN EN 60 751, class B)	1101-7050-1053-000
TF54 PT100 300MM	Pt100 (according to DIN EN 60 751, class B)	1101-7050-1063-000
TF54 PT100 400MM	Pt100 (according to DIN EN 60 751, class B)	1101-7050-1083-000
TF 54 PT1000 xx	**Pt1000**	**IP 54**
TF54 PT1000 50MM	Pt1000 (according to DIN EN 60 751, class B)	1101-7050-5011-000
TF54 PT1000 100MM	Pt1000 (according to DIN EN 60 751, class B)	1101-7050-5021-000
TF54 PT1000 150MM	Pt1000 (according to DIN EN 60 751, class B)	1101-7050-5031-000
TF54 PT1000 200MM	Pt1000 (according to DIN EN 60 751, class B)	1101-7050-5041-000
TF54 PT1000 250MM	Pt1000 (according to DIN EN 60 751, class B)	1101-7050-5051-000
TF54 PT1000 300MM	Pt1000 (according to DIN EN 60 751, class B)	1101-7050-5061-000
TF54 PT1000 400MM	Pt1000 (according to DIN EN 60 751, class B)	1101-7050-5081-000
TF 54 Ni1000 xx	**Ni 1000**	**IP 54**
TF54 NI1000 50MM	Ni1000 (according to DIN EN 43 760, class B, TCR = 6180 ppm / K)	1101-7050-9011-000
TF54 NI1000 100MM	Ni1000 (according to DIN EN 43 760, class B, TCR = 6180 ppm / K)	1101-7050-9021-000
TF54 NI1000 150MM	Ni1000 (according to DIN EN 43 760, class B, TCR = 6180 ppm / K)	1101-7050-9031-000
TF54 NI1000 200MM	Ni1000 (according to DIN EN 43 760, class B, TCR = 6180 ppm / K)	1101-7050-9041-000
TF54 NI1000 250MM	Ni1000 (according to DIN EN 43 760, class B, TCR = 6180 ppm / K)	1101-7050-9051-000
TF54 NI1000 300MM	Ni1000 (according to DIN EN 43 760, class B, TCR = 6180 ppm / K)	1101-7050-9061-000
TF54 NI1000 400MM	Ni1000 (according to DIN EN 43 760, class B, TCR = 6180 ppm / K)	1101-7050-9081-000
TF 54 NI1000TK xx	**Ni1000 TK5000**	**IP 54**
TF54 NITK 50MM	Ni1000 TK5000 (TCR = 5000 ppm / K), LG-Ni1000	1101-7051-0011-000
TF54 NITK 100MM	Ni1000 TK5000 (TCR = 5000 ppm / K), LG-Ni1000	1101-7051-0021-000
TF54 NITK 150MM	Ni1000 TK5000 (TCR = 5000 ppm / K), LG-Ni1000	1101-7051-0031-000
TF54 NITK 200MM	Ni1000 TK5000 (TCR = 5000 ppm / K), LG-Ni1000	1101-7051-0041-000
TF54 NITK 250MM	Ni1000 TK5000 (TCR = 5000 ppm / K), LG-Ni1000	1101-7051-0051-000
TF54 NITK 300MM	Ni1000 TK5000 (TCR = 5000 ppm / K), LG-Ni1000	1101-7051-0061-000
TF54 NITK 400MM	Ni1000 TK5000 (TCR = 5000 ppm / K), LG-Ni1000	1101-7051-0081-000
TF 54 LM235Z xx	**LM235Z**	**IP 54**
TF54 LM235Z 50MM	LM235Z (TCR = 10 mV / K; 2.73 V at 0 °C), KP10	1101-7052-1011-000
TF54 LM235Z 100MM	LM235Z (TCR = 10 mV / K; 2.73 V at 0 °C), KP10	1101-7052-1021-000
TF54 LM235Z 150MM	LM235Z (TCR = 10 mV / K; 2.73 V at 0 °C), KP10	1101-7052-1031-000
TF54 LM235Z 200MM	LM235Z (TCR = 10 mV / K; 2.73 V at 0 °C), KP10	1101-7052-1041-000
TF54 LM235Z 250MM	LM235Z (TCR = 10 mV / K; 2.73 V at 0 °C), KP10	1101-7052-1051-000
TF54 LM235Z 300MM	LM235Z (TCR = 10 mV / K; 2.73 V at 0 °C), KP10	1101-7052-1061-000
TF54 LM235Z 400MM	LM235Z (TCR = 10 mV / K; 2.73 V at 0 °C), KP10	1101-7052-1081-000
TF 54 KTY81-210 xx	**KTY81-210**	**IP 54**
TF54 KTY81-210 50MM	KTY81-210	1101-7052-0011-000
TF54 KTY81-210 100MM	KTY81-210	1101-7052-0021-000
TF54 KTY81-210 150MM	KTY81-210	1101-7052-0031-000
TF54 KTY81-210 200MM	KTY81-210	1101-7052-0041-000
TF54 KTY81-210 250MM	KTY81-210	1101-7052-0051-000
TF54 KTY81-210 300MM	KTY81-210	1101-7052-0061-000
TF54 KTY81-210 400MM	KTY81-210	1101-7052-0081-000

Continued on next page...

THERMASGARD® TF 54	Temperature measuring transducers (basic device)	
Type / WG03 / EL	**Sensor / Output**	**Item No.**
TF 54 NTC 1.8 K xx	**NTC 1.8 K**	**IP 54**
TF54 NTC1,8K 50MM	NTC 1.8 K	1101-7051-2011-000
TF54 NTC1,8K 100MM	NTC 1.8 K	1101-7051-2021-000
TF54 NTC1,8K 150MM	NTC 1.8 K	1101-7051-2031-000
TF54 NTC1,8K 200MM	NTC 1.8 K	1101-7051-2041-000
TF54 NTC1,8K 250MM	NTC 1.8 K	1101-7051-2051-000
TF54 NTC1,8K 300MM	NTC 1.8 K	1101-7051-2061-000
TF54 NTC1,8K 400MM	NTC 1.8 K	1101-7051-2081-000
TF 54 NTC10K xx	**NTC 10K**	**IP 54**
TF54 NTC10K 50MM	NTC 10K	1101-7051-5011-000
TF54 NTC10K 100MM	NTC 10K	1101-7051-5021-000
TF54 NTC10K 150MM	NTC 10K	1101-7051-5031-000
TF54 NTC10K 200MM	NTC 10K	1101-7051-5041-000
TF54 NTC10K 250MM	NTC 10K	1101-7051-5051-000
TF54 NTC10K 300MM	NTC 10K	1101-7051-5061-000
TF54 NTC10K 400MM	NTC 10K	1101-7051-5081-000
TF 54 NTC10K PR xx	**NTC 10K Precon**	**IP 54**
TF54 PRECON 50MM	NTC 10K Precon	1101-7051-9011-000
TF54 PRECON 100MM	NTC 10K Precon	1101-7051-9021-000
TF54 PRECON 150MM	NTC 10K Precon	1101-7051-9031-000
TF54 PRECON 200MM	NTC 10K Precon	1101-7051-9041-000
TF54 PRECON 250MM	NTC 10K Precon	1101-7051-9051-000
TF54 PRECON 300MM	NTC 10K Precon	1101-7051-9061-000
TF54 PRECON 400MM	NTC 10K Precon	1101-7051-9081-000
TF 54 NTC20K xx	**NTC 20K**	**IP 54**
TF54 NTC20K 50MM	NTC 20K	1101-7051-6011-000
TF54 NTC20K 100MM	NTC 20K	1101-7051-6021-000
TF54 NTC20K 150MM	NTC 20K	1101-7051-6031-000
TF54 NTC20K 200MM	NTC 20K	1101-7051-6041-000
TF54 NTC20K 250MM	NTC 20K	1101-7051-6051-000
TF54 NTC20K 300MM	NTC 20K	1101-7051-6061-000
TF54 NTC20K 400MM	NTC 20K	1101-7051-6081-000
TF 54 NTC30K xx	**NTC 30K**	**IP 54**
TF54 NTC30K 50MM	NTC 30K	1101-7051-7011-000
TF54 NTC30K 100MM	NTC 30K	1101-7051-7021-000
TF54 NTC30K 150MM	NTC 30K	1101-7051-7031-000
TF54 NTC30K 200MM	NTC 30K	1101-7051-7041-000
TF54 NTC30K 250MM	NTC 30K	1101-7051-7051-000
TF54 NTC30K 300MM	NTC 30K	1101-7051-7061-000
TF54 NTC30K 400MM	NTC 30K	1101-7051-7081-000
Extra charge:	Protection type **IP 65** (B-Head) Other sensors optional	 on request



TF 54
optional
(IP 65)



TF 54
standard
(IP 54)

Immersion / screw-in / duct temperature sensor with passive output

S+S REGELTECHNIK

One basic device in four variants ...









TF 54 +
TH - ms / xx

Immersion / screw-in temperature sensor with immersion sleeve, brass, nickel-plated

TF 54 +
TH - VA / xx

Immersion / screw-in temperature sensor with immersion sleeve, stainless steel, V4A

TF 54 +
TH - VA / xx / 90

Immersion / screw-in temperature sensor with immersion sleeve with neck tube, stainless steel, V4A

TF 54 +
MF - 06 - M

Duct temperature sensor with mounting flange, metal

Dimensional drawing
TH - ms / xx

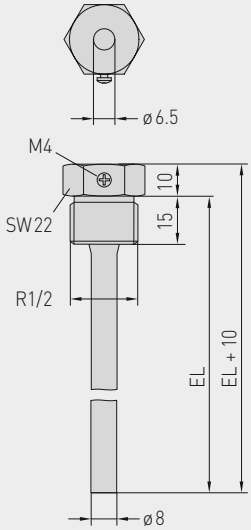

Dimensional drawing
TH - VA / xx

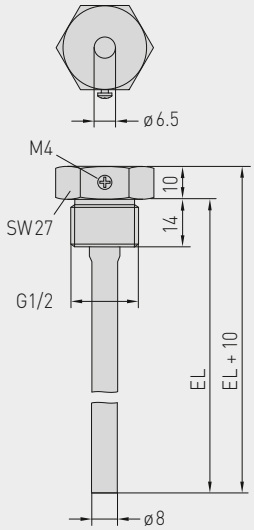

Dimensional drawing
TH - VA / xx / 90

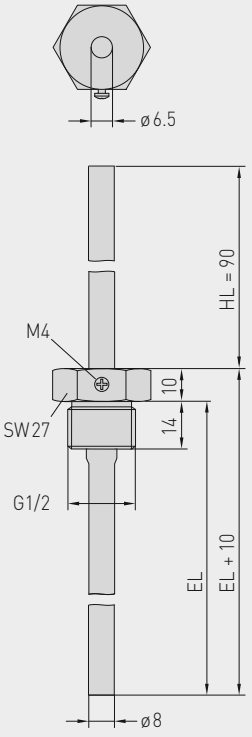

Dimensional drawing
MF - 06 - M

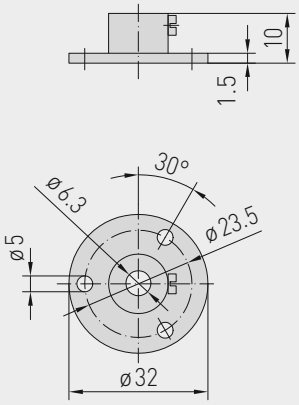

...through combination with accessories:



TH - ms / xx

Immersion sleeve,
brass, nickel-plated,
thread-sealing, conical,
according to DIN 10226



TH - VA / xx

Immersion sleeve,
stainless steel, V4A,
flat-sealing, cylindrical,
according to DIN 228



TH - VA / xx / 90

Immersion sleeve with neck tube,
stainless steel, V4A,
flat-sealing, cylindrical,
according to DIN 228



MF - 06 - M

Mounting flange,
metal

THERMASGARD® **TH**	Immersion sleeve Ø 8 mm (accessories)			
Type / WG01	**p_{max} (static)**	**T_{max}**	**Inserted Length (EL)**	**Item No.**
TH - ms / xx	**Brass nickel-plated**			without neck tube
TH-MS 50MM	10 bar	+150 °C	**50 mm**	7100-0011-0010-001
TH-MS 100MM	10 bar	+150 °C	**100 mm**	7100-0011-0020-001
TH-MS 150MM	10 bar	+150 °C	**150 mm**	7100-0011-0030-001
TH-MS 200MM	10 bar	+150 °C	**200 mm**	7100-0011-0040-001
TH-MS 250MM	10 bar	+150 °C	**250 mm**	7100-0011-0050-001
TH-MS 300MM	10 bar	+150 °C	**300 mm**	7100-0011-0060-001
TH-MS 350MM	10 bar	+150 °C	**350 mm**	7100-0011-0070-001
TH-MS 400MM	10 bar	+150 °C	**400 mm**	7100-0011-0080-001
TH - VA / xx	**Stainless steel, V4A** (1.4571)			without neck tube
TH-VA 50MM	40 bar	+600 °C	**50 mm**	7100-0012-0010-001
TH-VA 100MM	40 bar	+600 °C	**100 mm**	7100-0012-0020-001
TH-VA 150MM	40 bar	+600 °C	**150 mm**	7100-0012-0030-001
TH-VA 200MM	40 bar	+600 °C	**200 mm**	7100-0012-0040-001
TH-VA 250MM	40 bar	+600 °C	**250 mm**	7100-0012-0050-001
TH-VA 300MM	40 bar	+600 °C	**300 mm**	7100-0012-0060-001
TH-VA 350MM	40 bar	+600 °C	**350 mm**	7100-0012-0070-001
TH-VA 400MM	40 bar	+600 °C	**400 mm**	7100-0012-0080-001
TH - VA / xx / 90	**Stainless steel, V4A** (1.4571)			**with neck tube** (90 mm)
TH-VA 50/90MM	40 bar	+600 °C	**50 mm**	7100-0012-2010-001
TH-VA 100/90MM	40 bar	+600 °C	**100 mm**	7100-0012-2020-001
TH-VA 150/90MM	40 bar	+600 °C	**150 mm**	7100-0012-2030-001
TH-VA 200/90MM	40 bar	+600 °C	**200 mm**	7100-0012-2040-001
TH-VA 250/90MM	40 bar	+600 °C	**250 mm**	7100-0012-2050-001
TH-VA 300/90MM	40 bar	+600 °C	**300 mm**	7100-0012-2060-001
Note:	inner diameter of socket 6.5 mm For further information see last chapter!			

Mounting flange (accessories)			
Type / WG01		**T_{max}**	**Item No.**
MF			
MF-06-M	**Mounting flange,** metal (galvanised steel) Ø 32 mm, tube gland Ø 6.3 mm	+700 °C	7100-0030-5000-000
Note:	For further information see last chapter!		

S+S REGELTECHNIK

Screw-in / immersion temperature sensor with neck tube, with passive output

Screw-in resistance thermometer **THERM**ASGARD® **ETF 6** with neck tube, exchangeable insert, straight protective tube, connecting head made of aluminium and passive output.

This temperature sensor is used for temperature detection in liquid or gaseous media, in piping systems, in vessels or storage tanks, preferably in cases where pipes or vessels have to be insulated.

TECHNICAL DATA

Measuring range:	–35...+180 °C (T_{max} NTC = +150 °C, T_{max} LM235Z = +125 °C)
Sensors / output:	see table, passive (**Perfect Sensor Protection**) (optional also with two sensors)
Connection type:	2-wire connection (4-wire connection on PT100 / PT1000A, optional on other sensors)
Testing current:	< 0.6 mA (Pt1000) < 1.0 mA (Pt100) < 0.3 mA (Ni1000, Ni1000 TK5000) < 2.0 mW (NTC xx) < 2.0 mA (KTY 81-210) 400 µA...5 mA (LM235Z)
Process connection:	screwed socket with G ½" straight pipe thread
Protective tube:	stainless steel **V4A** (1.4571), G ½" straight pipe thread, wrench size 27 mm, p_{max} = 40 bar, Ø = 8 mm length of neck tube (HL) = 80 mm inserted length (EL) = 100 - 400 mm (see table)
Connecting head:	form B, aluminium material, white aluminium colour (similar RAL 9006), ambient temperature –20...+100° C, M 20 x 1.5
Electrical connection:	0.14 - 1.5 mm² via terminal screws on ceramic base
Insulating resistance:	≥ 100 MΩ, at +20 °C (500 V DC)
Humidity:	< 95 % r. H., non-precipitating air
Protection class:	III (according to EN 60 730)
Protection type:	IP 54 (according to EN 60 529), IP 65 (optional)

ETF 6
Top view



2-wire connection
(standard)



4-wire connection
(optional)



1x two-wire connection
standard

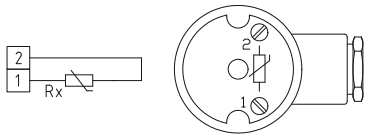

1x three-wire connection

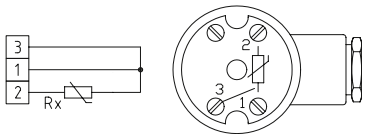

1x four-wire connection

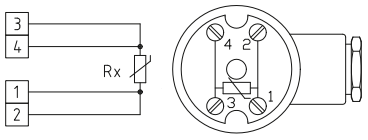

1x two-wire connection
LM 235 Z (KP 10)

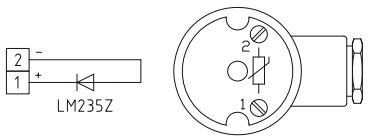

2x two-wire connection

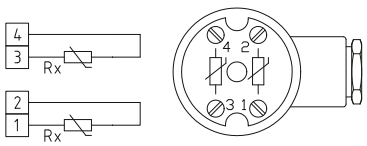

2x three-wire connection

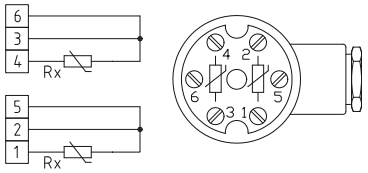

Dimensional drawing **ETF 6**

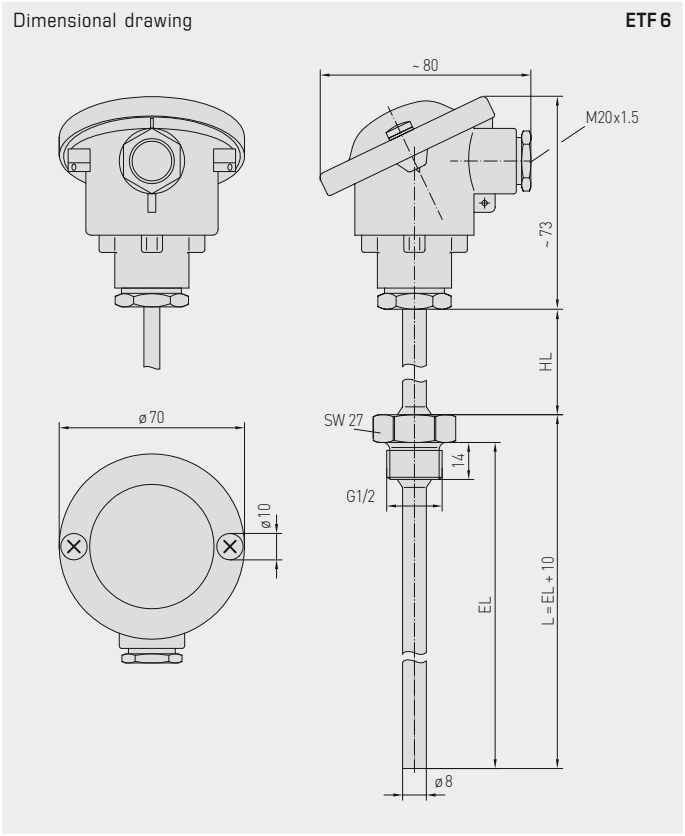

ETF 6





ETF 6
standard
(IP 54)



ETF 6
optional
(IP 65)

High-performance encapsulation against vibration, mechanical stress and humidity

PS-PROTECTION
PERFECT SENSOR PROTECTION

Screw-in / immersion temperature sensor with neck tube, with passive output

S+S REGELTECHNIK

THERMASGARD® ETF 6	Screw-in / immersion temperature sensor with neck tube	
Type / WG03 / EL	**Sensor / Output**	**Item No.**
ETF 6 PT100 xx	**Pt100**	**IP 54**
ETF6 PT100 100/80	Pt100 (according to DIN EN 60 751, class B)	1101-2070-1023-000
ETF6 PT100 150/80	Pt100 (according to DIN EN 60 751, class B)	1101-2070-1033-000
ETF6 PT100 200/80	Pt100 (according to DIN EN 60 751, class B)	1101-2070-1043-000
ETF6 PT100 250/80	Pt100 (according to DIN EN 60 751, class B)	1101-2070-1053-000
ETF6 PT100 400/80	Pt100 (according to DIN EN 60 751, class B)	1101-2070-1083-000
ETF 6 PT1000 xx	**Pt1000**	**IP 54**
ETF6 PT1000 100/80	Pt1000 (according to DIN EN 60 751, class B)	1101-2070-5021-000
ETF6 PT1000 150/80	Pt1000 (according to DIN EN 60 751, class B)	1101-2070-5031-000
ETF6 PT1000 200/80	Pt1000 (according to DIN EN 60 751, class B)	1101-2070-5041-000
ETF6 PT1000 250/80	Pt1000 (according to DIN EN 60 751, class B)	1101-2070-5051-000
ETF6 PT1000 400/80	Pt1000 (according to DIN EN 60 751, class B)	1101-2070-5081-000
ETF 6 Ni1000 xx	**Ni 1000**	**IP 54**
ETF6 NI1000 100/80	Ni1000 (according to DIN EN 43 760, class B, TCR = 6180 ppm / K)	1101-2070-9021-000
ETF6 NI1000 150/80	Ni1000 (according to DIN EN 43 760, class B, TCR = 6180 ppm / K)	1101-2070-9031-000
ETF6 NI1000 200/80	Ni1000 (according to DIN EN 43 760, class B, TCR = 6180 ppm / K)	1101-2070-9041-000
ETF6 NI1000 250/80	Ni1000 (according to DIN EN 43 760, class B, TCR = 6180 ppm / K)	1101-2070-9051-000
ETF6 NI1000 400/80	Ni1000 (according to DIN EN 43 760, class B, TCR = 6180 ppm / K)	1101-2070-9081-000
ETF 6 NI1000TK xx	**Ni1000 TK5000**	**IP 54**
ETF6 NITK 100/80	Ni1000 TK5000 (TCR = 5000 ppm / K), LG-Ni1000	1101-2071-0021-000
ETF6 NITK 150/80	Ni1000 TK5000 (TCR = 5000 ppm / K), LG-Ni1000	1101-2071-0031-000
ETF6 NITK 200/80	Ni1000 TK5000 (TCR = 5000 ppm / K), LG-Ni1000	1101-2071-0041-000
ETF6 NITK 250/80	Ni1000 TK5000 (TCR = 5000 ppm / K), LG-Ni1000	1101-2071-0051-000
ETF6 NITK 400/80	Ni1000 TK5000 (TCR = 5000 ppm / K), LG-Ni1000	1101-2071-0081-000
ETF 6 LM235Z xx	**LM235Z**	**IP 54**
ETF6 LM235Z 100/80	LM235Z (TCR = 10 mV / K; 2.73 V at 0 °C), KP10	1101-2072-1021-000
ETF6 LM235Z 150/80	LM235Z (TCR = 10 mV / K; 2.73 V at 0 °C), KP10	1101-2072-1031-000
ETF6 LM235Z 200/80	LM235Z (TCR = 10 mV / K; 2.73 V at 0 °C), KP10	1101-2072-1041-000
ETF6 LM235Z 250/80	LM235Z (TCR = 10 mV / K; 2.73 V at 0 °C), KP10	1101-2072-1051-000
ETF6 LM235Z 400/80	LM235Z (TCR = 10 mV / K; 2.73 V at 0 °C), KP10	1101-2072-1081-000
ETF 6 KTY81-210 xx	**KTY81-210**	**IP 54**
ETF6 KTY81-210 100	KTY81-210	1101-2072-0021-000
ETF6 KTY81-210 150	KTY81-210	1101-2072-0031-000
ETF6 KTY81-210 200	KTY81-210	1101-2072-0041-000
ETF6 KTY81-210 250	KTY81-210	1101-2072-0051-000
ETF6 KTY81-210 400	KTY81-210	1101-2072-0081-000

Continued on next page...

THERMASGARD® ETF 6	Screw-in / immersion temperature sensor with neck tube	
Type / WG03 / EL	**Sensor / Output**	**Item No.**
ETF 6 NTC 1.8 K xx	**NTC 1.8 K**	**IP 54**
ETF6 NTC1,8K 100/80	NTC 1.8 K	1101-2071-2021-000
ETF6 NTC1,8K 150/80	NTC 1.8 K	1101-2071-2031-000
ETF6 NTC1,8K 200/80	NTC 1.8 K	1101-2071-2041-000
ETF6 NTC1,8K 250/80	NTC 1.8 K	1101-2071-2051-000
ETF6 NTC1,8K 400/80	NTC 1.8 K	1101-2071-2081-000
ETF 6 NTC10K xx	**NTC 10K**	**IP 54**
ETF6 NTC10K 100/80	NTC 10K	1101-2071-5021-000
ETF6 NTC10K 150/80	NTC 10K	1101-2071-5031-000
ETF6 NTC10K 200/80	NTC 10K	1101-2071-5041-000
ETF6 NTC10K 250/80	NTC 10K	1101-2071-5051-000
ETF6 NTC10K 400/80	NTC 10K	1101-2071-5081-000
ETF 6 NTC10K PR xx	**NTC 10K Precon**	**IP 54**
ETF6 PRECON 100/80	NTC 10K Precon	1101-2071-9021-000
ETF6 PRECON 150/80	NTC 10K Precon	1101-2071-9031-000
ETF6 PRECON 200/80	NTC 10K Precon	1101-2071-9041-000
ETF6 PRECON 250/80	NTC 10K Precon	1101-2071-9051-000
ETF6 PRECON 400/80	NTC 10K Precon	1101-2071-9081-000
ETF 6 NTC20K xx	**NTC 20K**	**IP 54**
ETF6 NTC20K 100/80	NTC 20K	1101-2071-6021-000
ETF6 NTC20K 150/80	NTC 20K	1101-2071-6031-000
ETF6 NTC20K 200/80	NTC 20K	1101-2071-6041-000
ETF6 NTC20K 250/80	NTC 20K	1101-2071-6051-000
ETF6 NTC20K 400/80	NTC 20K	1101-2071-6081-000
ETF 6 NTC30K xx	**NTC 30K**	**IP 54**
ETF6 NTC30K 100/80	NTC 30K	1101-2071-7021-000
ETF6 NTC30K 150/80	NTC 30K	1101-2071-7031-000
ETF6 NTC30K 200/80	NTC 30K	1101-2071-7041-000
ETF6 NTC30K 250/80	NTC 30K	1101-2071-7051-000
ETF6 NTC30K 400/80	NTC 30K	1101-2071-7081-000
Extra charge:	Protection type **IP 65** (B-Head) Other sensors optional	 on request



ETF 6
optional
(IP 65)



ETF 6
standard
(IP 54)

Duct temperature sensors / smoke gas temperature sensors, including mounting flange, with passive output

S+S REGELTECHNIK

Resistance thermometer / smoke gas temperature sensor **THERM**ASGARD® **RGTF 1** with passive output, exchangeable measuring insert, straight protective tube, connecting head made of aluminium and mounting flange for measuring the relatively high temperatures in gaseous media, e.g. for exhaust air or flue gas temperature measurement.

TECHNICAL DATA

Measuring range:	–35...+600 °C (extended range limits from –100...+750 °C optional)
Sensor / output:	see table, passive, glass sensing resistor (**Perfect Sensor Protection**)
Accuracy class:	class B, DIN EN 60751
Connection type:	2-wire connection (3- or 4-wire connection optional)
Testing current:	< 0.6 mA (Pt1000) < 1.0 mA (Pt100)
Protective tube:	stainless steel **V4A** (1.4571), Ø = 9 mm inserted length (EL) = 200 - 500 mm (see table)
Connecting head:	form B, material aluminium, colour white aluminium (similar to RAL 9006), ambient temperature –20...+100 °C, M 20 x 1.5
Process connection:	by mounting flange, stainless steel (included in the scope of delivery)
Electrical connection:	0.14 - 2.5 mm² via terminal screws on ceramic base
Insulating resistance:	≥ 100 MΩ, at +20 °C (500 V DC)
Humidity:	< 95 % r. H., non-precipitating air
Protection class:	III (according to EN 60 730)
Protection type:	IP 54 (according to EN 60 529) IP 65 (optional)

RGTF 1
Top view



2-wire connection
(standard)



4-wire connection
(optional)





RGTF 1
standard
(IP 54)



RGTF 1
optional
(IP 65)

1x two-wire connection
Standard

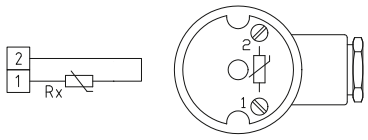

1x three-wire connection

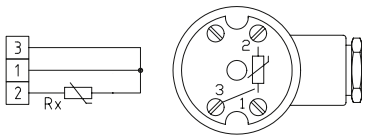

1x four-wire connection

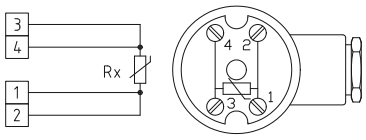

Duct temperature sensors / flue gas temperature sensors, including mounting flange, with passive output

Dimensional drawing **RGTF 1**

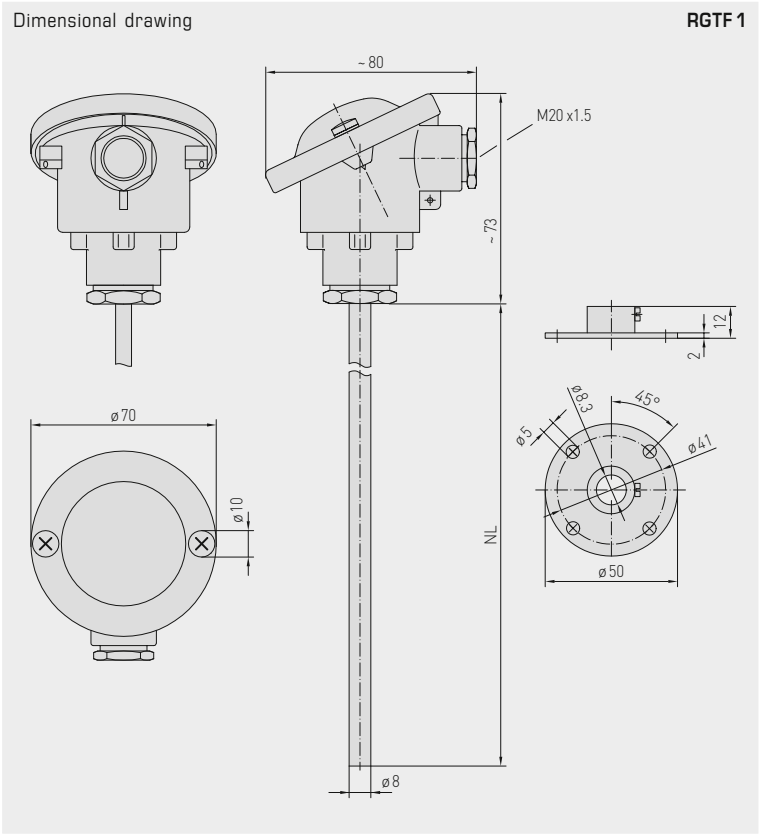

RGTF 1



High-performance encapsulation against vibration, mechanical stress and humidity

PS-PROTECTION
PERFECT SENSOR PROTECTION

RGTF 1
Measuring insert with ceramic tubelet

THERMASGARD® RGTF 1	Duct temperature sensors / flue gas temperature sensors		
Type / WG03	**Sensor / Output**	**Inserted Length (EL)**	**Item No.**
RGTF1 PT100 xx	**Pt100**		**IP 54**
RGTF1 PT100 200MM	Pt100 (according to DIN EN 60 751, class B)	**200 mm**	1101-3040-1041-000
RGTF1 PT100 250MM	Pt100 (according to DIN EN 60 751, class B)	**250 mm**	1101-3040-1051-000
RGTF1 PT100 300MM	Pt100 (according to DIN EN 60 751, class B)	**300 mm**	1101-3040-1061-000
RGTF1 PT100 500MM	Pt100 (according to DIN EN 60 751, class B)	**500 mm**	1101-3040-1101-000
RGTF1 PT1000 xx	**Pt1000**		**IP 54**
RGTF1 PT1000 200MM	Pt1000 (according to DIN EN 60 751, class B)	**200 mm**	1101-3040-5041-000
RGTF1 PT1000 250MM	Pt1000 (according to DIN EN 60 751, class B)	**250 mm**	1101-3040-5051-000
RGTF1 PT1000 300MM	Pt1000 (according to DIN EN 60 751, class B)	**300 mm**	1101-3040-5061-000
RGTF1 PT1000 500MM	Pt1000 (according to DIN EN 60 751, class B)	**500 mm**	1101-3040-5101-000
Extra charge:	Protection type **IP 65** (B-Head) Other ranges optional		
For special orders please specify:	Type, sensor, measuring range, connection type, process connection, inserted length		

S+S REGELTECHNIK

Screw-in temperature sensors / smoke gas temperature sensors with neck tube and passive output

Screw-in resistance thermometer / smoke gas temperature sensor **THERM**ASGARD® **RGTF 2** with neck tube, passive output, exchangeable measuring insert, straight protective tube and connecting head made of aluminium for measuring relatively high temperatures in gaseous or liquid media, e.g. for exhaust air or flue gas temperature measurement.

TECHNICAL DATA

Measuring range:	–35...+600 °C (extended range limits from –100...+750 °C optional)
Sensor / output:	see table, passive, glass sensing resistor (**Perfect Sensor Protection**)
Accuracy class:	class B, DIN EN 60751
Connection type:	2-wire connection (3- or 4-wire connection optional)
Testing current:	< 0.6 mA (Pt1000) < 1.0 mA (Pt100)
Process connection:	screwed socket with G ½" straight pipe thread
Protective tube:	stainless steel **V4A** (1.4571), G ½" straight pipe thread, wrench size 27 mm, p_{max} = 40 bar, Ø = 8 mm length of neck tube (HL) = 80 mm inserted length (EL) = 100 - 500 mm (see table)
Connecting head:	form B, material aluminium, colour white aluminium (similar to RAL 9006), ambient temperature –20...+100 °C, M 20 x 1.5
Electrical connection:	0.14 - 2.5 mm² via terminal screws on ceramic base
Insulating resistance:	≥ 100 MΩ, at +20 °C (500 V DC)
Humidity:	< 95 % r. H., non-precipitating air
Protection class:	III (according to EN 60 730)
Protection type:	IP 54 (according to EN 60 529), IP 65 (optional)

RGTF 2
Top view



2-wire connection
(standard)



4-wire connection
(optional)





RGTF 2
standard
(IP 54)



RGTF 2
optional
(IP 65)

1x two-wire connection
standard

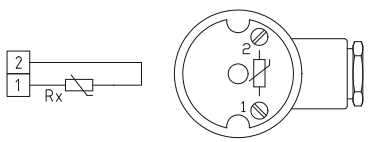

1x three-wire connection

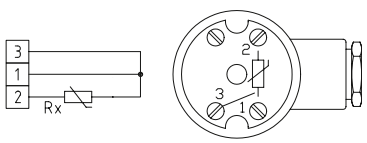

1x four-wire connection

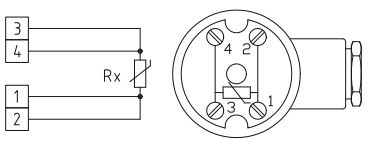

Dimensional drawing **RGTF 2**

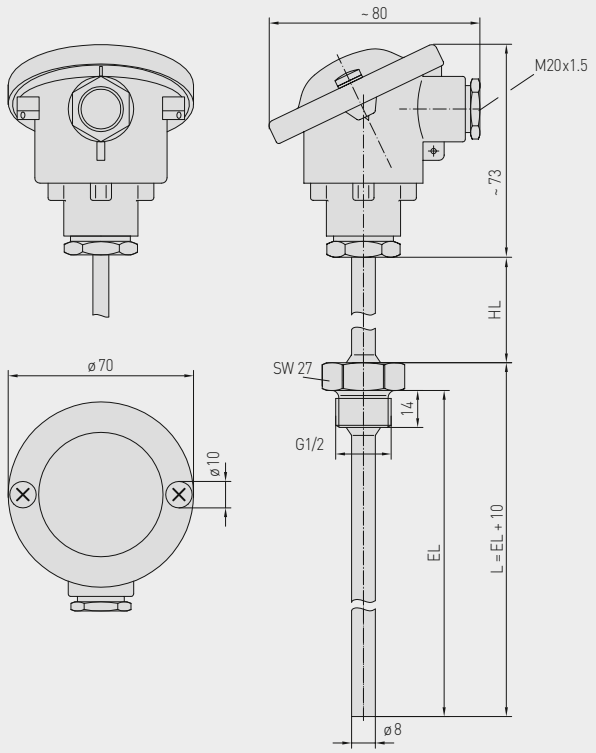

RGTF 2



RGTF 2
Measuring insert
with ceramic tubelet

High-performance encapsulation against
vibration, mechanical stress and humidity

PS-PROTECTION
PERFECT SENSOR PROTECTION

THERMASGARD® RGTF 2	Screw-in temperature sensors / flue gas temperature sensors with neck tube		
Type / WG03	**Sensor / Output**	**Inserted Length (EL)**	**Item No.**
RGTF2 PT100 xx	**Pt100**		**IP 54**
RGTF2 PT100 100/80MM	Pt100 (according to DIN EN 60 751, class B)	**100 mm**	1101-2090-1021-000
RGTF2 PT100 150/80MM	Pt100 (according to DIN EN 60 751, class B)	**150 mm**	1101-2090-1031-000
RGTF2 PT100 200/80MM	Pt100 (according to DIN EN 60 751, class B)	**200 mm**	1101-2090-1041-000
RGTF2 PT100 250/80MM	Pt100 (according to DIN EN 60 751, class B)	**250 mm**	1101-2090-1051-000
RGTF2 PT100 300/80MM	Pt100 (according to DIN EN 60 751, class B)	**300 mm**	1101-2090-1061-000
RGTF2 PT100 500/80MM	Pt100 (according to DIN EN 60 751, class B)	**500 mm**	1101-2090-1101-000
RGTF2 PT1000 xx	**Pt1000**		**IP 54**
RGTF2 PT1000 100/80MM	Pt1000 (according to DIN EN 60 751, class B)	**100 mm**	1101-2090-5021-000
RGTF2 PT1000 150/80MM	Pt1000 (according to DIN EN 60 751, class B)	**150 mm**	1101-2090-5031-000
RGTF2 PT1000 200/80MM	Pt1000 (according to DIN EN 60 751, class B)	**200 mm**	1101-2090-5041-000
RGTF2 PT1000 250/80MM	Pt1000 (according to DIN EN 60 751, class B)	**250 mm**	1101-2090-5051-000
RGTF2 PT1000 300/80MM	Pt1000 (according to DIN EN 60 751, class B)	**300 mm**	1101-2090-5061-000
RGTF2 PT1000 500/80MM	Pt1000 (according to DIN EN 60 751, class B)	**500 mm**	1101-2090-5101-000
Extra charge:	Protection type **IP 65** (B-Head) Other ranges optional		
For special orders please specify:	Type, sensor, measuring range, connection type, process connection, Length of neck tube and inserted length		

THERMASGARD® HTF 50
THERMASGARD® HTF 200

Sleeve sensor / cable temperature sensor duct / immersion / screw-in temperature sensor, with passive output

S+S REGELTECHNIK

The sleeve sensor / cable sensor **THERM**ASGARD® **HTF** is used to measure temperatures in liquid and gaseous media. It can be used as a duct sensor and - if installed in an immersion sleeve - as an immersion and screw-in sensor. The sleeve length varies, depending on request, from 30...400 mm (standard is 50 mm respectively 200 mm), the cable length is arbitrary (standard is 1.5 m). Depending on application, with silicone, glass fibre, or PVC leads, for two-wire or four-wire connection. For direct, continuous use in liquids, please use our **THE** immersion sleeves (see type table).

TECHNICAL DATA

Measuring ranges:	–35...+105 °C **PVC**, LiYY, 2 x 0.25 mm² –50...+180 °C **Silicone**, SiHF, 2 x 0.25 mm² –50...+250 °C **PTFE**, 2 x 1.0 mm² –50...+350 °C **glass fibre**, 2 x 0.25 mm² ends stripped with wire end sleeves (extended measuring range limits optional, depending on connection leads, T_{max} Ni1000 = **+180 °C**, T_{max} NTC / Ni1000 TK5000 = **+150 °C**, T_{max} LM235Z = **+125 °C**)
Sensors / output:	see table, passive (optional also with 2 sensors) (**Perfect Sensor Protection** with IP68)
Connection type:	2-wire connection (4-wire connection optional)
Testing current:	< 0.6 mA (Pt1000) < 1.0 mA (Pt100) < 0.3 mA (Ni1000, Ni1000 TK5000) < 2.0 mW (NTC xx) 400 µA...5 mA (LM235Z)
Protective tube (sensor sleeve):	stainless steel, **V4A** (1.4571), Ø = 6 mm **HTF 50** nominal length (NL) = 50 mm **HTF 200** nominal length (NL) = 200 mm (other optional dimensions also available, nominal length (NL) = 30...400 mm) cable entry stamped (optional rolled)
Connection cable:	cable length (KL) = 1.5 m (optional also 3 m, 5 m, 8 m, 10 m)
Insulating resistance:	≥ 100 MΩ, at +20 °C (500 V DC)
Process connection:	using immersion sleeves **THE** (see table) or mounting flange, plastic (see table) (optionally in galvanised steel, see chapter Accessories)
Permitted humidity:	< 95 % r.H., non-precipitating air
Protection class:	III (according to EN 60 730)
Protection type:	**IP 65** (according to EN 60 529) humidity-tight **stamped** **IP 68** (optional watertight compound-filled*) **rolled** **IP 54** (optional **glass fibre** cable)
ACCESSORIES	
MF-06-K	**Mounting flange,** plastic, 56.8 x 84.3 mm, Ø = 6.2 mm tube gland, T_{max} = +100 °C (is **not** included in scope of delivery)
THE-ms / xx	**Immersion sleeve, brass, nickel-plated,** Ø = 9 mm, inserted length (EL) = 50 - 250 mm (see table), inner diameter of socket Ø = 5.2 mm, with **adjusting screw** M12 x 1.5 T_{max} = +130 °C, p_{max} = 16 bar
THE-VA / xx	**Immersion sleeve, stainless steel, V4A** (1.4571), Ø = 9 mm, inserted length (EL) = 50 - 400 mm (see table), inner diameter of socket Ø = 5.2 mm, with **adjusting screw** M12 x 1.5 T_{max} = +200 °C, p_{max} = 40 bar

* High-performance encapsulation against vibration, mechanical stress and humidity

PS-PROTECTION
PERFECT SENSOR PROTECTION

1x two-wire connection **standard**

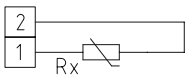

1x two-wire connection **LM 235 Z (KP 10)**

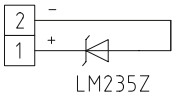

1x four-wire connection (optional)

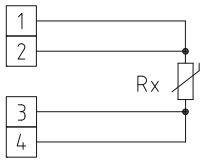



IP 65 (standard) humidity-tight **stamped**



IP 68 (optional) watertight compound-filled*, **rolled**



IP 54 (optional) with **glass fibre** cable

MF-06-K
Mounting flange, plastic (optional)



Dimensional drawing **MF-06-K**

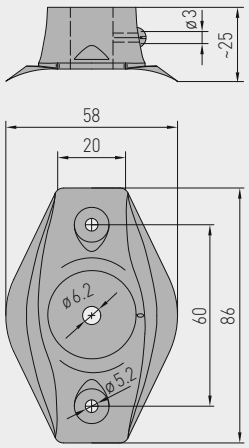

HTF 50 + THE-VA

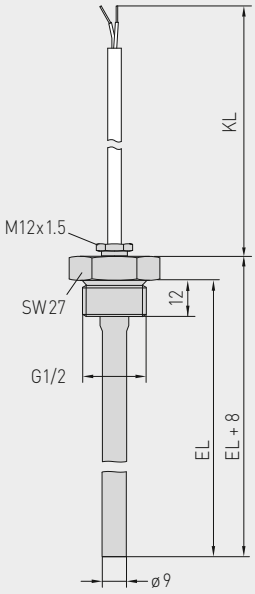

HTF 50 + THE-ms

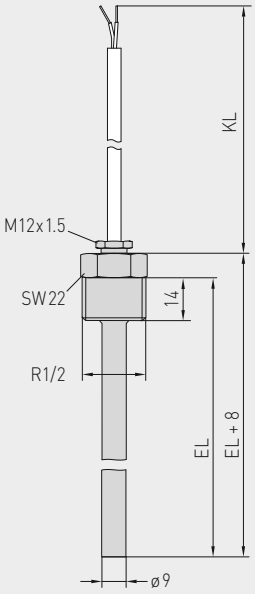

HTF 50 / HTF 200

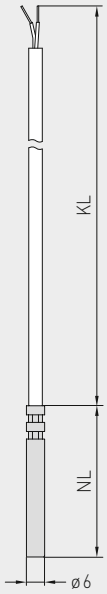

HTF 200 + MF-06-K
with accessory mounting flange
(see type table)
as duct temperature sensor



HTF 50 + THE-xx
with accessory immersion sleeve
(see type table)
as immersion / screw-in temperature sensor



THE-VA
Immersion sleeve,
stainless steel, V4A,
with adjusting screw



THE-ms
Immersion sleeve,
brass, nickel-plated,
with adjusting screw

HTF 50
with PVC / silicone cable
(standard)



HTF 50
with glass fibre cable



Sleeve sensor / cable temperature sensor
duct / immersion / screw-in temperature sensor,
with passive output

S+S REGELTECHNIK

THERMASGARD® HTF 50 sleeve sensor / cable temperature sensor (NL = 50 mm)					
Type / WG03	**Cable material**	**Cable length**	**Measuring Range**	**Protection class**	**Item No. Sensor**
HTF50 PT100					**Pt 100, class B**
HTF50 PT100	**PVC**	**1.5 m**	–35...+105 °C	IP65 *	1101-6030-1211-110
HTF50 PT100	**Silicone**	**1.5 m**	–50...+180 °C	IP65 *	1101-6030-1211-120
HTF50 PT100	**PTFE**	**1.5 m**	–50...+250 °C	IP65 *	1101-6030-1211-140
HTF50 PT100	**Glass Fibre**	**1.5 m**	–50...+350 °C	**IP54**	1101-6030-1211-050
HTF50 PT100	**PVC**	**3 m**	–35...+105 °C	IP65 *	1101-6030-1231-110
HTF50 PT100	**Silicone**	**3 m**	–50...+180 °C	IP65 *	1101-6030-1231-120
HTF50 PT100	**PVC**	**5 m**	–35...+105 °C	IP65 *	1101-6030-1251-110
HTF50 PT100	**Silicone**	**5 m**	–50...+180 °C	IP65 *	1101-6030-1251-120
HTF50 PT100	**PVC**	**8 m**	–35...+105 °C	IP65 *	1101-6030-1281-110
HTF50 PT100	**Silicone**	**8 m**	–50...+180 °C	IP65 *	1101-6030-1281-120
HTF50 PT100	**PVC**	**10 m**	–35...+105 °C	IP65 *	1101-6030-1301-110
HTF50 PT100	**Silicone**	**10 m**	–50...+180 °C	IP65 *	1101-6030-1301-120
HTF50 PT1000					**Pt 1000, class B**
HTF50 PT1000	**PVC**	**1.5 m**	–35...+105 °C	IP65 *	1101-6030-5211-110
HTF50 PT1000	**Silicone**	**1.5 m**	–50...+180 °C	IP65 *	1101-6030-5211-120
HTF50 PT1000	**PTFE**	**1.5 m**	–50...+250 °C	IP65 *	1101-6030-5211-140
HTF50 PT1000	**Glass Fibre**	**1.5 m**	–50...+350 °C	**IP54**	1101-6030-5211-050
HTF50 PT1000	**PVC**	**3 m**	–35...+105 °C	IP65 *	1101-6030-5231-110
HTF50 PT1000	**Silicone**	**3 m**	–50...+180 °C	IP65 *	1101-6030-5231-120
HTF50 PT1000	**PVC**	**5 m**	–35...+105 °C	IP65 *	1101-6030-5251-110
HTF50 PT1000	**Silicone**	**5 m**	–50...+180 °C	IP65 *	1101-6030-5251-120
HTF50 PT1000	**PVC**	**8 m**	–35...+105 °C	IP65 *	1101-6030-5281-110
HTF50 PT1000	**Silicone**	**8 m**	–50...+180 °C	IP65 *	1101-6030-5281-120
HTF50 PT1000	**PVC**	**10 m**	–35...+105 °C	IP65 *	1101-6030-5301-110
HTF50 PT1000	**Silicone**	**10 m**	–50...+180 °C	IP65 *	1101-6030-5301-120
HTF50 PT1000 A					**Pt 1000 A, class A-TGA**
HTF50 PT1000A	**PVC**	**1.5 m**	–35...+105 °C	IP65 *	1101-6030-6211-110
HTF50 PT1000A	**Silicone**	**1.5 m**	–50...+180 °C	IP65 *	1101-6030-6211-120
HTF50 NI1000					**Ni 1000**
HTF50 NI1000	**PVC**	**1.5 m**	–35...+105 °C	IP65 *	1101-6030-9211-110
HTF50 NI1000	**Silicone**	**1.5 m**	–50...+180 °C	IP65 *	1101-6030-9211-120
HTF50 NI1000	**PVC**	**3 m**	–35...+105 °C	IP65 *	1101-6030-9231-110
HTF50 NI1000	**Silicone**	**3 m**	–50...+180 °C	IP65 *	1101-6030-9231-120
HTF50 NI1000	**PVC**	**5 m**	–35...+105 °C	IP65 *	1101-6030-9251-110
HTF50 NI1000	**Silicone**	**5 m**	–50...+180 °C	IP65 *	1101-6030-9251-120
HTF50 NI1000	**PVC**	**8 m**	–35...+105 °C	IP65 *	1101-6030-9281-110
HTF50 NI1000	**Silicone**	**8 m**	–50...+180 °C	IP65 *	1101-6030-9281-120
HTF50 NI1000	**PVC**	**10 m**	–35...+105 °C	IP65 *	1101-6030-9301-110
HTF50 NI1000	**Silicone**	**10 m**	–50...+180 °C	IP65 *	1101-6030-9301-120
HTF50 NITK					**Ni 1000 TK 5000**
HTF50 NITK	**PVC**	**1.5 m**	–35...+105 °C	IP65 *	1101-6031-0211-110
HTF50 NITK	**Silicone**	**1.5 m**	**–50...+150 °C**	IP65 *	1101-6031-0211-120
HTF50 NITK	**PVC**	**3 m**	–35...+105 °C	IP65 *	1101-6031-0231-110
HTF50 NITK	**Silicone**	**3 m**	**–50...+150 °C**	IP65 *	1101-6031-0231-120
HTF50 NITK	**PVC**	**5 m**	–35...+105 °C	IP65 *	1101-6031-0251-110
HTF50 NITK	**Silicone**	**5 m**	**–50...+150 °C**	IP65 *	1101-6031-0251-120
HTF50 NITK	**PVC**	**8 m**	–35...+105 °C	IP65 *	1101-6031-0281-110
HTF50 NITK	**Silicone**	**8 m**	**–50...+150 °C**	IP65 *	1101-6031-0281-120
HTF50 NITK	**PVC**	**10 m**	–35...+105 °C	IP65 *	1101-6031-0301-110
HTF50 NITK	**Silicone**	**10 m**	**–50...+150 °C**	IP65 *	1101-6031-0301-120
HTF50 LM235Z					**LM 235 Z**
HTF50 LM235Z	**PVC**	**1.5 m**	–35...+105 °C	IP65 *	1101-6032-1211-110
HTF50 LM235Z	**Silicone**	**1.5 m**	**–40...+125 °C**	IP65 *	1101-6032-1211-120
HTF50 LM235Z	**PVC**	**3 m**	–35...+105 °C	IP65 *	1101-6032-1231-110
HTF50 LM235Z	**Silicone**	**3 m**	**–40...+125 °C**	IP65 *	1101-6032-1231-120
HTF50 LM235Z	**PVC**	**5 m**	–35...+105 °C	IP65 *	1101-6032-1251-110
HTF50 LM235Z	**Silicone**	**5 m**	**–40...+125 °C**	IP65 *	1101-6032-1251-120
HTF50 LM235Z	**PVC**	**8 m**	–35...+105 °C	IP65 *	1101-6032-1281-110
HTF50 LM235Z	**Silicone**	**8 m**	**–40...+125 °C**	IP65 *	1101-6032-1281-120
HTF50 LM235Z	**PVC**	**10 m**	–35...+105 °C	IP65 *	1101-6032-1301-110
HTF50 LM235Z	**Silicone**	**10 m**	**–40...+125 °C**	IP65 *	1101-6032-1301-120

Continued on next page ...

THERMASGARD® HTF 50 sleeve sensor / cable temperature sensor (NL = 50 mm)

Type / WG03	Cable material	Cable length	Measuring Range	Protection class	Item No. Sensor
HTF50 NTC1.8K					**NTC 1.8K**
HTF50 NTC1,8K	**PVC**	**1.5 m**	–35...+105 °C	IP65 *	1101-6031-2211-110
HTF50 NTC1,8K	**Silicone**	**1.5 m**	**–50...+150 °C**	IP65 *	1101-6031-2211-120
HTF50 NTC1,8K	**PVC**	**3 m**	–35...+105 °C	IP65 *	1101-6031-2231-110
HTF50 NTC1,8K	**Silicone**	**3 m**	**–50...+150 °C**	IP65 *	1101-6031-2231-120
HTF50 NTC1,8K	**PVC**	**5 m**	–35...+105 °C	IP65 *	1101-6031-2251-110
HTF50 NTC1,8K	**Silicone**	**5 m**	**–50...+150 °C**	IP65 *	1101-6031-2251-120
HTF50 NTC1,8K	**PVC**	**8 m**	–35...+105 °C	IP65 *	1101-6031-2281-110
HTF50 NTC1,8K	**Silicone**	**8 m**	**–50...+150 °C**	IP65 *	1101-6031-2281-120
HTF50 NTC1,8K	**PVC**	**10 m**	–35...+105 °C	IP65 *	1101-6031-2301-110
HTF50 NTC1,8K	**Silicone**	**10 m**	**–50...+150 °C**	IP65 *	1101-6031-2301-120
HTF50 NTC10K					**NTC 10K**
HTF50 NTC10K	**PVC**	**1.5 m**	–35...+105 °C	IP65 *	1101-6031-5211-110
HTF50 NTC10K	**Silicone**	**1.5 m**	**–50...+150 °C**	IP65 *	1101-6031-5211-120
HTF50 NTC10K	**PVC**	**3 m**	–35...+105 °C	IP65 *	1101-6031-5231-110
HTF50 NTC10K	**Silicone**	**3 m**	**–50...+150 °C**	IP65 *	1101-6031-5231-120
HTF50 NTC10K	**PVC**	**5 m**	–35...+105 °C	IP65 *	1101-6031-5251-110
HTF50 NTC10K	**Silicone**	**5 m**	**–50...+150 °C**	IP65 *	1101-6031-5251-120
HTF50 NTC10K	**PVC**	**8 m**	–35...+105 °C	IP65 *	1101-6031-5281-110
HTF50 NTC10K	**Silicone**	**8 m**	**–50...+150 °C**	IP65 *	1101-6031-5281-120
HTF50 NTC10K	**PVC**	**10 m**	–35...+105 °C	IP65 *	1101-6031-5301-110
HTF50 NTC10K	**Silicone**	**10 m**	**–50...+150 °C**	IP65 *	1101-6031-5301-120
HTF50 NTC20K					**NTC 20K**
HTF50 NTC20K	**PVC**	**1.5 m**	–35...+105 °C	IP65 *	1101-6031-6211-110
HTF50 NTC20K	**Silicone**	**1.5 m**	**–50...+150 °C**	IP65 *	1101-6031-6211-120
HTF50 NTC20K	**PVC**	**3 m**	–35...+105 °C	IP65 *	1101-6031-6231-110
HTF50 NTC20K	**Silicone**	**3 m**	**–50...+150 °C**	IP65 *	1101-6031-6231-120
HTF50 NTC20K	**PVC**	**5 m**	–35...+105 °C	IP65 *	1101-6031-6251-110
HTF50 NTC20K	**Silicone**	**5 m**	**–50...+150 °C**	IP65 *	1101-6031-6251-120
HTF50 NTC20K	**PVC**	**8 m**	–35...+105 °C	IP65 *	1101-6031-6281-110
HTF50 NTC20K	**Silicone**	**8 m**	**–50...+150 °C**	IP65 *	1101-6031-6281-120
HTF50 NTC20K	**PVC**	**10 m**	–35...+105 °C	IP65 *	1101-6031-6301-110
HTF50 NTC20K	**Silicone**	**10 m**	**–50...+150 °C**	IP65 *	1101-6031-6301-120

Extra charge:	*	Protection type **IP68** (Sensor sleeve watertight compound-filled)	
		Other sensors optional	on request
		Cable length (KL) 3 m, 5 m, 8 m, 10 m (standard lengths)	on request
		Connection type **4-wire** (4-conductor)	on request
For special orders please specify: (possible for 25 or more pieces)		Type sensor length (NL), sensor, cable material, connection type, cable length (KL), protection type e. g. HTF-30mm, Pt1000, PVC, 2-wire, 10 m, IP68; HTF-50mm, Ni1000 TK5000, silicon, 4-wire, 5 m, IP65	



IP65 (standard)
humidity-tight **stamped**



IP68 (optional)
watertight compound-filled,
rolled



IP54 (optional)
with **glass fibre** cable

HTF50
(NL = 50 mm)
with PVC / silicone cable



HTF50
(NL = 50 mm)
with glass fibre cable



THERMASGARD® HTF 200

Sleeve sensor / cable temperature sensor
duct / immersion / screw-in temperature sensor,
with passive output

S+S REGELTECHNIK

THERMASGARD® HTF 200 sleeve sensor / cable temperature sensor (NL = 200 mm)					
Type / WG03	**Cable material**	**Cable length**	**Measuring Range**	**Protection class**	**Item No. Sensor**
HTF200 PT100					**Pt 100, class B**
HTF200 PT100	**PVC**	**1.5 m**	–35...+105 °C	IP65 *	1101-6090-1211-110
HTF200 PT100	**Silicone**	**1.5 m**	–50...+180 °C	IP65 *	1101-6090-1211-120
HTF200 PT1000					**Pt 1000, class B**
HTF200 PT1000	**PVC**	**1.5 m**	–35...+105 °C	IP65 *	1101-6090-5211-110
HTF200 PT1000	**Silicone**	**1.5 m**	–50...+180 °C	IP65 *	1101-6090-5211-120
HTF200 PT1000 A					**Pt 1000 A, class A-TGA**
HTF200 PT1000A	**PVC**	**1.5 m**	–35...+105 °C	IP65 *	1101-6090-6211-110
HTF200 PT1000A	**Silicone**	**1.5 m**	–50...+180 °C	IP65 *	1101-6090-6211-120
HTF200 NI1000					**Ni 1000**
HTF200 NI1000	**PVC**	**1.5 m**	–35...+105 °C	IP65 *	1101-6090-9211-110
HTF200 NI1000	**Silicone**	**1.5 m**	–50...+180 °C	IP65 *	1101-6090-9211-120
HTF200 NITK					**Ni 1000 TK 5000**
HTF200 NITK	**PVC**	**1.5 m**	–35...+105 °C	IP65 *	1101-6091-0211-110
HTF200 NITK	**Silicone**	**1.5 m**	**– 50...+150 °C**	IP65 *	1101-6091-0211-120
HTF200 LM235Z					**LM 235 Z**
HTF200 LM235Z	**PVC**	**1.5 m**	–35...+105 °C	IP65 *	1101-6092-1211-110
HTF200 LM235Z	**Silicone**	**1.5 m**	**– 40...+125 °C**	IP65 *	1101-6092-1211-120
HTF200 NTC1,8K					**NTC 1.8K**
HTF200 NTC1,8K	**PVC**	**1.5 m**	–35...+105 °C	IP65 *	1101-6091-2211-110
HTF200 NTC1,8K	**Silicone**	**1.5 m**	**– 50...+150 °C**	IP65 *	1101-6091-2211-120
HTF200 NTC10K					**NTC 10K**
HTF200 NTC10K	**PVC**	**1.5 m**	–35...+105 °C	IP65 *	1101-6091-5211-110
HTF200 NTC10K	**Silicone**	**1.5 m**	**– 50...+150 °C**	IP65 *	1101-6091-5211-120
HTF200 PRECON					**NTC 10K Precon**
HTF200 PRECON	**PVC**	**1.5 m**	–35...+105 °C	IP65 *	1101-6091-9211-110
HTF200 PRECON	**Silicone**	**1.5 m**	**– 50...+150 °C**	IP65 *	1101-6091-9211-120
HTF200 NTC20K					**NTC 20K**
HTF200 NTC20K	**PVC**	**1.5 m**	–35...+105 °C	IP65 *	1101-6091-6211-110
HTF200 NTC20K	**Silicone**	**1.5 m**	**– 50...+150 °C**	IP65 *	1101-6091-6211-120
Extra charge: *	Protection type **IP 68** (Sensor sleeve watertight compound-filled)				
	Other sensors optional				on request
	Cable length (KL) 3 m, 5 m, 8 m, 10 m (standard lengths)				on request
	Connection type **4-wire** (4-conductor)				on request
For special orders please specify: (possible for 25 or more pieces)	Type sensor length (NL), sensor, cable material, connection type, cable length (KL), protection type e. g. HTF - 200 mm, Pt1000, PVC, 2-wire, 10 m, IP 68; HTF - 400 mm, Ni1000 TK5000, silicon, 4-wire, 5 m, IP 65				



HTF 200
(NL = 200 mm)
with PVC/silicone cable



IP 65 (standard)
humidity-tight **stamped**



IP 68 (optional)
watertight compound-filled,
rolled

THERMASGARD® HTF 50 accessory as immersion / screw-in sensor temperature sensor (ESTF)			
Type / WG01	**Description**		**Item No.**
THE-ms / xx			
	Immersion sleeve, brass, nickel-plated, Ø 9 mm, inner diameter of socket Ø = 5.2 mm, with **adjusting screw** M12 x 1.5		
THE-MS 50MM	p_{max} = 16 bar, T_{max} = +130 °C	EL = **50 mm**	7100-0011-6010-002
THE-MS 100MM	p_{max} = 16 bar, T_{max} = +130 °C	EL = **100 mm**	7100-0011-6020-002
THE-MS 150MM	p_{max} = 16 bar, T_{max} = +130 °C	EL = **150 mm**	7100-0011-6030-002
THE-MS 200MM	p_{max} = 16 bar, T_{max} = +130 °C	EL = **200 mm**	7100-0011-6040-002
THE-MS 250MM	p_{max} = 16 bar, T_{max} = +130 °C	EL = **250 mm**	7100-0011-6050-002
THE-VA / xx			
	Immersion sleeve, stainless steel, V4A (1.4571), Ø 9 mm, inner diameter of socket Ø = 5.2 mm, with **adjusting screw** M12 x 1.5		
THE-VA 50MM	p_{max} = 40 bar, T_{max} = +200 °C	EL = **50 mm**	7100-0012-6010-002
THE-VA 100MM	p_{max} = 40 bar, T_{max} = +200 °C	EL = **100 mm**	7100-0012-6020-002
THE-VA 150MM	p_{max} = 40 bar, T_{max} = +200 °C	EL = **150 mm**	7100-0012-6030-002
THE-VA 200MM	p_{max} = 40 bar, T_{max} = +200 °C	EL = **200 mm**	7100-0012-6040-002
THE-VA 250MM	p_{max} = 40 bar, T_{max} = +200 °C	EL = **250 mm**	7100-0012-6050-002
THE-VA 300MM	p_{max} = 40 bar, T_{max} = +200 °C	EL = **300 mm**	7100-0012-6060-002
THE-VA 400MM	p_{max} = 40 bar, T_{max} = +200 °C	EL = **400 mm**	7100-0012-6080-002
xx = (EL)	Other installation lengths on request		

HTF 50
(NL = 50 mm)
with **THE** immersion sleeve
as immersion / screw-in temperature sensor



THE-ms
Immersion sleeve,
brass, nickel-plated,
with adjusting screw



THE-VA
Immersion sleeve,
stainless steel, V4A,
with adjusting screw

MF-06-K
Mounting flange,
plastic
(optional)



THERMASGARD® HTF 50 accessories (standard) THERMASGARD® HTF 200 accessories (standard)			
Type / WG01	**Description**	T_{max}	**Item No.**
MF			
MF-06-K	**Mounting flange** plastic, 56.8 x 84.3 mm, Ø 6.2 mm tube gland (**not** included in scope of delivery)	+100 °C	7100-0030-1000-000
Note:	For further information see last chapter!		

THERMASGARD® OFTF

Surface contact temperature sensors /
surface temperature sensors,
with passive output

S+S REGELTECHNIK

Small surface contact resistance thermometer in aluminium enclosure (cable sensor).
The surface sensor **THERM**ASGARD® **OFTF** is used for temperature detection on flat or slightly convex surfaces, for instance for surface temperature measurement at windows, for monitoring formation of condensate, or as heating surface sensor, e.g. at windows or walls.

1x two-wire connection
standard

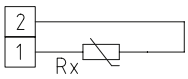

1x two-wire connection
LM 235 Z (KP 10)

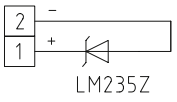

TECHNICAL DATA

Measuring range:	–30...+105 °C
Sensors / output:	see table, passive (**Perfect Sensor Protection** with IP68)
Connection type:	2-wire connection
Testing current:	< 0.6 mA (Pt1000) < 1.0 mA (Pt100) < 0.3 mA (Ni1000, Ni1000 TK5000) < 2.0 mW (NTC xx) < 2.0 mA (KTY 81-210) 400 µA...5 mA (LM235Z)
Process connection:	attachment to the surface to be measured through fixing hole in the sensor head or by suitable adhesive
Protective sleeve:	aluminium
Dimensions:	8 x 8 x 50 mm
Connecting cable:	PVC; 1.5 m, LiYY, 2 x 0.25 mm², ends stripped with wire end sleeves (optional with silicone cable SiHF, up to +180 °C)
Insulating resistance:	≥ 100 MΩ, at +20 °C (500 V DC)
Permissible air humidity:	< 95 % r. H., non-precipitating air
Protection class:	III (according to EN 60 730)
Protection type:	**IP65** (according to EN 60 529) humidity-tight stamped **IP68** (optional sensor sleeve watertight compound-filled*)

* High-performance encapsulation against vibration, mechanical stress and humidity

PS-PROTECTION
PERFECT SENSOR PROTECTION

Dimensional drawing **OFTF**

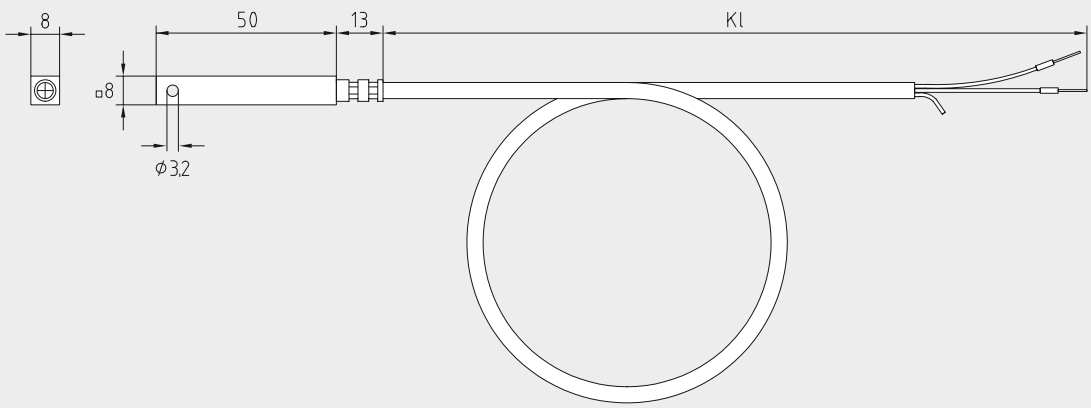

OFTF



THERMASGARD® OFTF	Surface contact temperature sensors / surface temperature sensors	
Type / WG03	**Sensor / output**	**Art. no.**
OFTF	**Pt, Ni, LM235Z**	**IP65**
OFTF PT100	Pt100 (according to DIN EN 60751, class B)	1101-6010-1211-110
OFTF PT1000	Pt1000 (according to DIN EN 60751, class B)	1101-6010-5211-110
OFTF NI1000	Ni1000 (according to DIN EN 43760, class B, TCR = 6180 ppm / K)	1101-6010-9211-110
OFTF NITK	Ni1000 TK5000 (TCR = 5000 ppm / K), LG-Ni1000	1101-6011-0211-110
OFTF LM235Z	LM235Z (TCR = 10 mV / K; 2.73 V at 0 °C), KP10	1101-6012-1211-110
OFTF	**NTC**	**IP65**
OFTF NTC1,8K	NTC 1.8K	1101-6011-2211-110
OFTF NTC10K	NTC 10K	1101-6011-5211-110
OFTF PRECON	NTC 10K Precon	1101-6011-9211-110
OFTF NTC20K	NTC 20K	1101-6011-6211-110
OFTF NTC30K	NTC 30K	1101-6011-7211-110
OFTF	**KTY**	**IP65**
OFTF KTY81-210	KTY 81-210	1101-6012-0211-110
Extra charge:	Protection type **IP68** (sensor sleeve watertight compound-filled) 2-wire connecting leads (**PVC / silicone**) per running metre 4-wire connecting leads (**PVC / silicone**) per running metre	 on request on request
For special orders please specify:	Type, sensor type, cable length e.g. OFTF Pt100, 3 m; OFTF Pt100 1 / 3 DIN, 4 m; OFTF KTY 81-210, 6 m	

S+S REGELTECHNIK

Surface contact temperature sensors / tube contact temperature sensors, including strap, with passive output

THERMASGARD® **ALTF 1** surface contact sensors are electric contact thermometers and are used for measuring surface temperatures of solids, having at least one so-called contact area that is brought into contact with the surface to be measured. The surface contact temperature sensor ALTF 1 with connection cable and passive output determines the temperature of a medium flowing inside a pipe (e.g. water temperature) via the surface temperature. ALTF 1 is a tube contact resistance thermometer with strap and axial feeler tube for measuring temperature on piping and tubes (e.g. cold-water and hot-water), or at heating sections for heating system control.

1x two-wire connection
standard

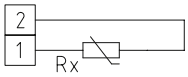

1x two-wire connection
LM 235 Z (KP 10)

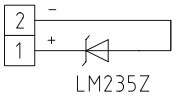

1x four-wire connection
(optional)

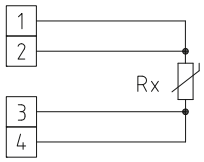

TECHNICAL DATA

Measuring range:	–35...+105 °C PVC –35...+180 °C silicone (T_{max} NTC = +150 °C, T_{max} LM 235 Z = +125 °C)
Sensors / output:	see table, passive (optional also with 2 sensors) (**Perfect Sensor Protection** with IP68)
Connection type:	2-wire connection (4-wire connection optional)
Testing current:	< 0.6 mA (Pt1000) < 1.0 mA (Pt100) < 0.3 mA (Ni1000, Ni1000 TK5000) < 2.0 mW (NTC xx) 400 µA...5 mA (LM235Z)
Process connection:	endless strap and metal tightener (included in the scope of delivery)
Protective tube:	stainless steel, **V4A** (1.4571), including pre-bent contact plate
Strap dimensions:	Ø = 13 - 92 mm (¼ - 3"); length 300 mm
Connecting cable:	PVC; 1.5 m, LiYY, 2 x 0.25 mm² or silicone, SiHF, 2 x 0.25 mm² ends stripped, with wire end sleeves
Insulating resistance:	≥ 100 MΩ, at +20 °C (500 V DC)
Humidity:	< 95 % r. H., non-precipitating air
Protection class:	III (according to EN 60 730)
Protection type:	**IP 65** (according to EN 60 529) humidity-tight stamped **IP 68** (optional sensor sleeve watertight compound-filled*)

THERMASGARD® **ALTF 1** Surface contact temperature sensors / tube contact temperature sensors (PVC)

Type / WG03	Sensor / Output	Item No.
ALTF 1 xx PVC	**Pt, Ni, LM235Z**	**IP 65, PVC**
ALTF1 PT100	Pt100 (according to DIN EN 60 751, class B)	1101-6020-1211-110
ALTF1 PT1000	Pt1000 (according to DIN EN 60 751, class B)	1101-6020-5211-110
ALTF1 NI1000	Ni1000 (according to DIN EN 43 760, class B, TCR = 6180 ppm / K)	1101-6020-9211-110
ALTF1 NITK	Ni1000 TK5000 (TCR = 5000 ppm / K), LG - Ni1000	1101-6021-0211-110
ALTF1 LM235Z	LM235Z (TCR = 10 mV / K; 2.73 V at 0 °C), KP10	1101-6022-1211-110
ALTF 1 xx PVC	**NTC**	**IP 65, PVC**
ALTF1 NTC1,8K	NTC 1.8 K	1101-6021-2211-110
ALTF1 NTC10K	NTC 10K	1101-6021-5211-110
ALTF1 NTC20K	NTC 20K	1101-6021-6211-110
Note:	including strap, connecting cable **PVC** (KL = 1.5 m)	
Extra charge:	Protection type **IP 68** (Sensor sleeve watertight compound-filled)	
	2-wire connecting leads, per running meter (**PVC**)	on request
	Other sensors optional	on request

Accessories		
WLP-1	Heat-conductive paste, silicone-free	7100-0060-1000-000

Dimensional drawing ALTF 1

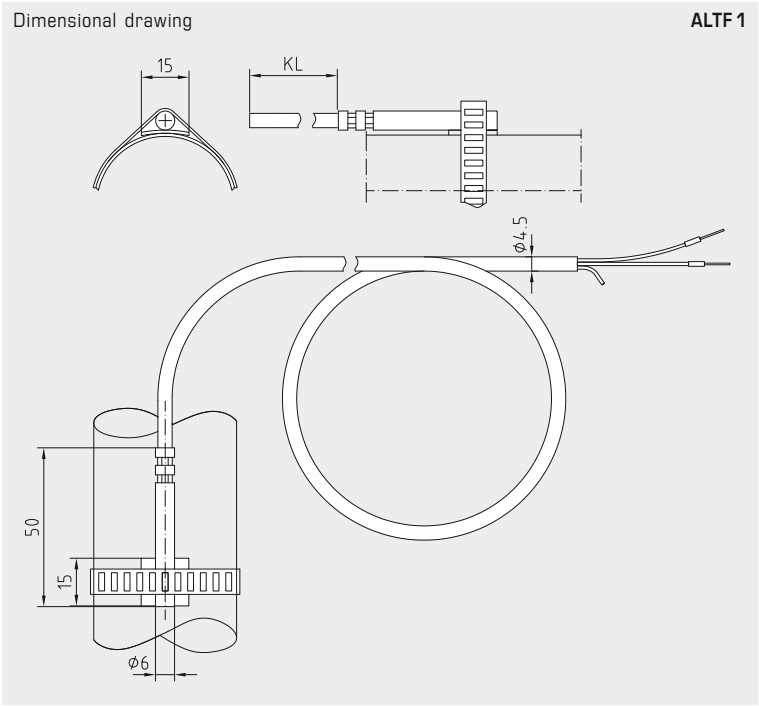

ALTF 1



* High-performance encapsulation against vibration, mechanical stress and humidity

PS-PROTECTION
PERFECT SENSOR PROTECTION

THERMASGARD® ALTF 1	Surface contact temperature sensors / tube contact temperature sensors (silicone)	
Type / WG03	**Sensor / Output**	**Item No.**
ALTF 1 xx SILIKON	**Pt, Ni, LM235Z**	**IP65, silicone**
ALTF1 PT100	Pt100 (according to DIN EN 60751, class B)	1101-6020-1211-120
ALTF1 PT1000	Pt1000 (according to DIN EN 60751, class B)	1101-6020-5211-120
ALTF1 NI1000	Ni1000 (according to DIN EN 43760, class B, TCR = 6180 ppm / K)	1101-6020-9211-120
ALTF1 NITK	Ni1000 TK5000 (TCR = 5000 ppm / K), LG-Ni1000	1101-6021-0211-120
ALTF1 LM235Z	LM235Z (TCR = 10 mV / K; 2.73 V at 0 °C), KP10	1101-6022-1211-120
ALTF 1 xx SILIKON	**NTC**	**IP65, silicone**
ALTF1 NTC1,8K	NTC 1.8 K	1101-6021-2211-120
ALTF1 NTC10K	NTC 10K	1101-6021-5211-120
ALTF1 NTC20K	NTC 20K	1101-6021-6211-120
Note:	including strap, connecting cable **silicone** (KL = 1.5 m)	
Extra charge:	Protection type **IP68** (Sensor sleeve watertight compound-filled)	
	2-wire connecting leads, per running meter (**silicone**)	on request
	Other sensors optional	on request

Accessories		
WLP-1	Heat-conductive paste, silicone-free	7100-0060-1000-000

THERMASGARD® ALTF 2
THERMASGARD® ALTF 02

Surface contact temperature sensors / tube contact temperature sensors, including strap, with passive output

S+S REGELTECHNIK

THERMASGARD® **ALTF 2** is a tube contact resistance thermometer with passive output, strap and terminal box enclosure made of impact-resistant plastic and enclosure cover with quick-locking screws.

THERMASGARD® **ALTF 02** is a cost-saving tube contact resistance thermometer with passive output, strap, and terminal box enclosure made of impact-resistant plastic with snap-on lid.

ALTF 2 / ALTF 02 surface contact sensors are electric contact thermometers used for surface temperature measurement on solids, having at least one so-called contact area that is brought into contact with the surface to be measured. This surface contact temperature sensor measures the temperature of a medium flowing inside a pipe (e.g. the water temperature). This tube surface sensor is used for measuring temperature on piping and tubes (e.g. cold-water and hot-water), wor on heating sections for heating system control.

1x two-wire connection
standard

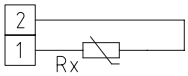

1x two-wire connection
LM 235 Z (KP 10)

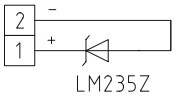

1x four-wire connection
(optional)

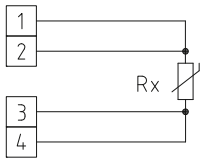



TECHNICAL DATA

Measuring range:	–30...+110 °C
Sensors / output:	see table, passive (**Perfect Sensor Protection**) (optional also with two sensors)
Connection type:	2-wire connection (4-wire connection on PT100 / PT1000A, optional on other sensors)
Testing current:	< 0.6 mA (Pt1000) < 1.0 mA (Pt100) < 0.3 mA (Ni1000, Ni1000 TK5000) < 2.0 mW (NTC xx) 400 µA...5 mA (LM235Z)
Process connection:	endless strap and metal tightener (included in the scope of delivery)
Strap dimensions:	Ø = 13 - 92 mm (¼ - 3"), length L = 300 mm
Enclosure:	plastic, UV-stabilised, material polyamide, 30 % glass-globe reinforced, colour traffic white (similar to RAL 9016), **ALTF 02 with snap-on lid,** **ALTF 2 with quick-locking screws** (slotted / Phillips head combination)
Dimensions:	72 x 64 x 37.8 mm (Tyr 1 / Tyr 01)
Electrical connection:	0.14 - 1.5 mm² via terminal screws
Cable gland:	M 16 x 1.5; including strain relief, exchangeable, max. inner diameter 10.4 mm
Insulating resistance:	≥ 100 MΩ, at +20 °C (500 V DC)
Humidity:	< 95 % r. H., non-precipitating air
Protection class:	III (according to EN 60 730)
Protection type:	**ALTF 02 IP 43** (according to EN 60 529) **ALTF 2 IP 65** (according to EN 60 529)

THERMASGARD® **ALTF 02** Surface contact temperature sensors / tube contact temperature sensors, *Standard* including strap, with snap-on lid

Type / WG03B	Sensor / Output	Item No.
ALTF 02	**Pt, Ni, LM235Z**	**IP 43**
ALTF02 PT100	Pt100 (according to DIN EN 60 751, class B)	1101-1010-1003-000
ALTF02 PT1000	Pt1000 (according to DIN EN 60 751, class B)	1101-1010-5001-000
ALTF02 NI1000	Ni1000 (according to DIN EN 43 760, class B, TCR = 6180 ppm / K)	1101-1010-9001-000
ALTF02 NITK	Ni1000 TK5000 (TCR = 5000 ppm / K), LG - Ni1000	1101-1011-0001-000
ALTF02 LM235Z	LM235Z (TCR = 10 mV / K; 2.73 V at 0 °C), KP10	1101-1012-1001-000
ALTF 02	**NTC**	**IP 43**
ALTF02 NTC1,8K	NTC 1.8 K	1101-1011-2001-000
ALTF02 NTC10K	NTC 10K	1101-1011-5001-000
ALTF02 NTC20K	NTC 20K	1101-1011-6001-000
Note:	Other sensors optional	on request

Accessories		
WLP-1	Heat-conductive paste, silicone-free	7100-0060-1000-000

Dimensional drawing

ALTF 2
ALTF 02

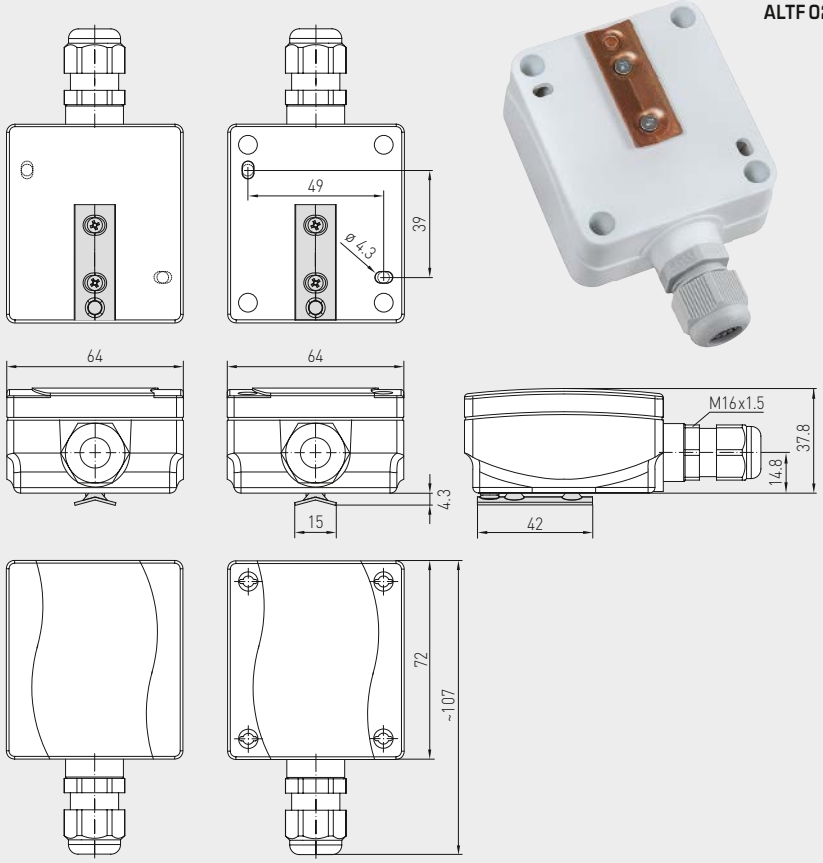

with snap-on lid

with quick-locking screws



ALTF 02
with snap-on lid
(IP 43)



ALTF 2
with quick-locking screws
(IP 65)

High-performance encapsulation against vibration, mechanical stress and humidity

PS-PROTECTION
PERFECT SENSOR PROTECTION

THERMASGARD® **ALTF 2**	Surface contact temperature sensors / tube contact temperature sensors, *Premium* including strap, with quick-locking screws	
Type / WG03	**Sensor / Output**	**Item No.**
ALTF 2	**Pt, Ni, LM235Z**	**IP 65**
ALTF2 PT100	Pt100 (according to DIN EN 60 751, class B)	1101-1020-1003-000
ALTF2 PT1000	Pt1000 (according to DIN EN 60 751, class B)	1101-1020-5001-000
ALTF2 PT1000A	Pt1000 (according to VDI / VDE 3512, class A-TGA)	1101-1020-6003-000
ALTF2 NI1000	Ni1000 (according to DIN EN 43 760, class B, TCR = 6180 ppm / K)	1101-1020-9001-000
ALTF2 NITK	Ni1000 TK5000 (TCR = 5000 ppm / K), LG-Ni1000	1101-1021-0001-000
ALTF2 LM235Z	LM235Z (TCR = 10 mV / K; 2.73 V at 0 °C), KP10	1101-1022-1001-000
ALTF 2	**NTC**	**IP 65**
ALTF2 NTC1,8K	NTC 1.8 K	1101-1021-2001-000
ALTF2 NTC10K	NTC 10K	1101-1021-5001-000
ALTF2 NTC20K	NTC 20K	1101-1021-6001-000
Note:	Other sensors optional	on request

Accessories		
WLP-1	Heat-conductive paste, silicone-free	7100-0060-1000-000

S+S REGELTECHNIK

Pendulum room temperature sensors with passive output

Resistance thermometer **THERM**ASGARD® **RPTF 1** with passive output is specifically used for temperature detection in larger rooms and halls. Due to the measuring method employed by this pendulum room temperature sensor in combination with its positioning in the room, excellent and room-representative measuring results are achieved as ambient air of the room is steadily washing around the sensor.

RPTF 1



TECHNICAL DATA

Measuring range:	–5...+60 °C
Sensors / output:	see table, passive (optional also with two sensors)
Sensor protection:	**plastic** sinter filter, Ø 16 mm, L = 35 mm, exchangeable (optional **metal** sinter filter, Ø 16 mm, L = 32 mm)
Connection type:	2-wire connection (4-wire connection optional)
Testing current:	< 0.6 mA (Pt1000) < 1.0 mA (Pt100) < 0.3 mA (Ni1000, Ni1000 TK5000) < 2.0 mW (NTC xx) < 2.0 mA (KTY 81-210) 400 µA...5 mA (LM235Z)
Connection cable:	PVC, H03VV-F, 2 x 0.5 mm², ends stripped with wire end sleeves KL = approx. 1.5 m (other lengths optional)
Protective tube:	**stainless steel V2A** (1.4301), Ø=16 mm, NL = 142 mm
Insulating resistance:	≥ 100 MΩ, at +20 °C (500 V DC)
Humidity:	< 95 % r. H.
Protection class:	III (according to EN 60 730)
Protection type:	IP 65 (according to EN 60 529)

1x four-wire connection (optional)

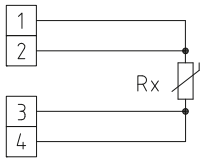

Dimensional drawing **RPTF 1**

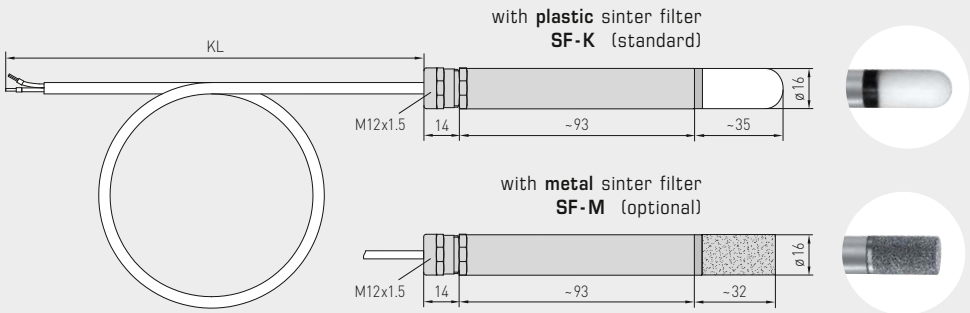

1x two-wire connection **standard**

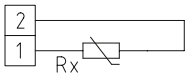

1x two-wire connection **LM 235 Z (KP 10)**

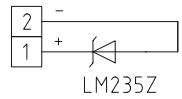

THERMASGARD® RPTF 1 Pendulum room temperature sensors (with metal sleeve)

Type / WG03	Sensor / Output	Item No.
RPTF 1		**IP 65**
RPTF1 PT100	Pt100 (according to DIN EN 60 751, class B)	1101-6060-1211-010
RPTF1 PT1000	Pt1000 (according to DIN EN 60 751, class B)	1101-6060-5211-010
RPTF1 NI1000	Ni1000 (according to DIN EN 43 760, class B, TCR = 6180 ppm / K)	1101-6060-9211-010
RPTF1 NITK	Ni1000 TK5000 (TCR = 5000 ppm / K), LG-Ni1000	1101-6061-0211-010
RPTF1 LM235Z	LM235Z (TCR = 10 mV / K; 2.73 V at 0 °C), KP10	1101-6062-1211-110
RPTF1 NTC1,8K	NTC 1.8 K	1101-6061-2211-010
RPTF1 NTC10K	NTC 10K	1101-6061-5211-010
RPTF1 PRECON	NTC 10K Precon	1101-6061-9211-010
RPTF1 NTC20K	NTC 20K	1101-6061-6211-010
RPTF1 NTC30K	NTC 30K	1101-6061-7211-010
RPTF1 KTY81-210	KTY 81-210	1101-6062-0211-010
Accessories		
SF-M	**Metal** sinter filter, Ø 16 mm, L = 32 mm, exchangeable stainless steel **V4A** (1.4404)	7000-0050-2200-100
Extra charge:	2-wire connecting leads, per running meter (**PVC**) 4-wire connecting leads, per running meter (**PVC**)	on request on request
For special orders please specify:	Type, sensor type and cable length e. g. RPTF1 Pt100, 3 m; RPTF1 Pt1000, 4 m; RPTF1 KTY 81-210, 6 m	

Resistance thermometer **THERM**ASGARD® **RPTF 2** with passive output is specifically used for temperature detection in larger rooms and halls, as dark radiation sensor for example. The pendulum room sensor RPTF-2 (globe thermometer) determines the effective portion of active radiation or also the effective radiant heat at the measured location. Due to the measuring method employed by this pendulum room temperature sensor in combination with its positioning in the room, an excellent and room-representative measuring result is achieved. The globe temperature is determined to take heat radiation into consideration and to estimate the degree of thermal comfort (operative room temperature).
The operative room temperature describes the coaction of heat radiation and heat convection (the ratio of globe temperature / air temperature is approx. 70 % / 30 %).

RPTF 2



TECHNICAL DATA

Measuring range:	–5...+60 °C
Sensors / output:	see table, passive (optional also with two sensors)
Connection type:	2-wire connection (4-wire connection optional)
Testing current:	< 0.6 mA (Pt1000) < 1.0 mA (Pt100) < 0.3 mA (Ni1000, Ni1000 TK5000) < 2.0 mW (NTC xx) < 2.0 mA (KTY 81-210) 400 µA...5 mA (LM235Z)
Globe:	plastic, colour black, Ø = 50 mm
Connection cable:	PVC, H03VV-F, 2 x 0.5 mm², ends stripped with wire end sleeves KL = approx. 1.5 m (other lengths optional)
Insulating resistance:	≥ 100 MΩ, at +20 °C (500 V DC)
Humidity:	< 95 % r. H.
Protection class:	III (according to EN 60 730)
Protection type:	IP 65 (according to EN 60 529)

1x four-wire connection (optional)

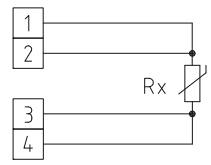

Dimensional drawing

RPTF 2

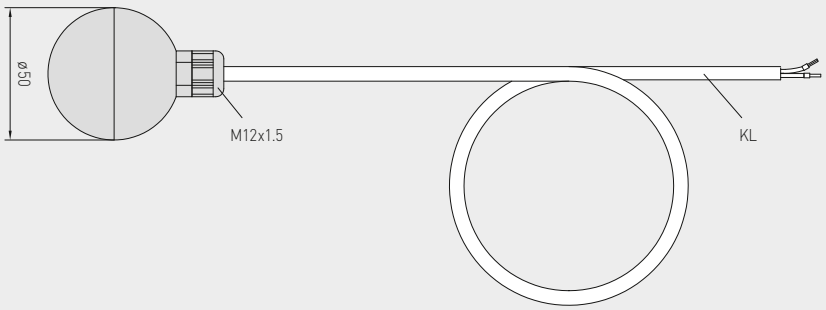

1x two-wire connection **standard**

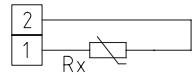

1x two-wire connection **LM 235 Z (KP 10)**

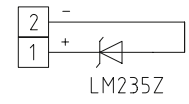

THERMASGARD® RPTF 2 Pendulum room temperature sensors (with globe)

Type / WG03	Sensor / Output	Item No.
RPTF 2		**IP 65**
RPTF2 PT100	Pt100 (according to DIN EN 60 751, class B)	1101-6070-1211-010
RPTF2 PT1000	Pt1000 (according to DIN EN 60 751, class B)	1101-6070-5211-010
RPTF2 NI1000	Ni1000 (according to DIN EN 43 760, class B, TCR = 6180 ppm / K)	1101-6070-9211-010
RPTF2 NITK	Ni1000 TK5000 (TCR = 5000 ppm / K), LG-Ni1000	1101-6071-0211-010
RPTF2 LM235Z	LM235Z (TCR = 10 mV / K; 2.73 V at 0 °C), KP10	1101-6072-1211-010
RPTF2 NTC1,8K	NTC 1.8 K	1101-6071-2211-010
RPTF2 NTC10K	NTC 10K	1101-6071-5211-010
RPTF2 PRECON	NTC 10K Precon	1101-6071-9211-010
RPTF2 NTC20K	NTC 20K	1101-6071-6211-010
RPTF2 NTC30K	NTC 30K	1101-6071-7211-010
RPTF2 KTY81-210	KTY 81-210	1101-6072-0211-010
Extra charge::	2-wire connecting leads, per running meter (**PVC**) 4-wire connecting leads, per running meter (**PVC**)	on request on request
For special orders please specify:	Type, sensor type and cable length e. g. RPTF2 Pt100, 3 m; RPTF2 Pt1000, 4 m; RPTF2 KTY 81-210, 6 m	

On-wall radiation temperature sensors with passive output

S+S REGELTECHNIK

Resistance thermometer **THERM**ASGARD® **ASTF** with passive output, terminal box enclosure made of impact-resistant plastic and enclosure cover with quick-locking screws. This radiation sensor is specifically designed for temperature detection in wet areas or in larger rooms or halls. The on-wall radiation temperature sensor ASTF determines the effective portion of active radiation or the effective radiant heat at the measured location. Due to the measuring method employed by the dark radiation temperature sensor, excellent and room-representative measuring results are achieved.

ASTF



TECHNICAL DATA

Measuring range:	–30 ...+ 75 °C
Sensors / output:	see table, passive (optional also with two sensors)
Connection type:	2-wire connection (4-wire connection on PT100 / PT1000A, optional on other sensors)
Testing current:	< 0.6 mA (Pt1000) < 1.0 mA (Pt100) < 0.3 mA (Ni1000, Ni1000 TK5000) < 2.0 mW (NTC xx) < 2.0 mA (KTY 81-210) 400 µA...5 mA (LM235Z)
Insulating resistance:	≥ 100 MΩ, at +20 °C (500 V DC)
Process connection:	by screws
Enclosure:	plastic, UV-stabilised, material polyamide, 30 % glass-globe reinforced, with quick-locking screws (slotted / Phillips head combination), colour traffic white (similar to RAL 9016), semi-globe: black
Enclosure dimensions:	72 x 64 x 37.8 (51.8) mm (Tyr 1)
Cable gland:	M16 x 1.5; including strain relief, exchangeable, max. inner diameter 10.4 mm
Electrical connection:	0.14 - 1.5 mm², via terminal screws
Humidity:	< 95 % r. H.
Protection class:	III (according to EN 60 730)
Protection type:	**IP 65** (according to EN 60 529)

Dimensional drawing **ASTF**

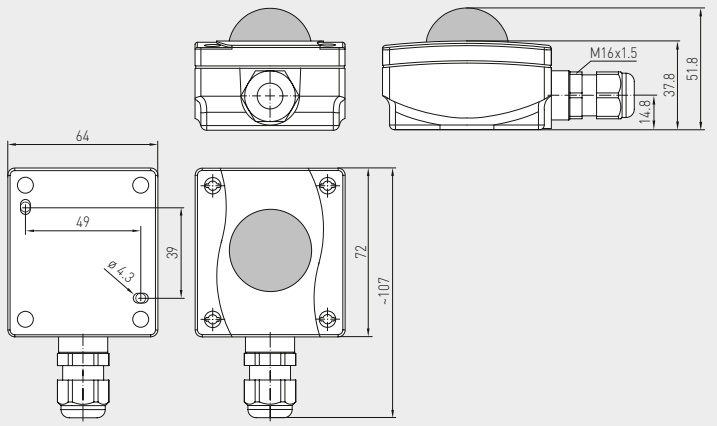

1x two-wire connection **standard**

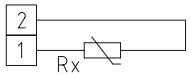

1x two-wire connection **LM235Z (KP10)**

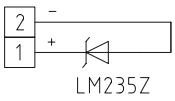

1x three-wire connection (optional)

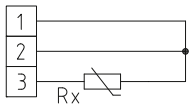

1x four-wire connection (optional)

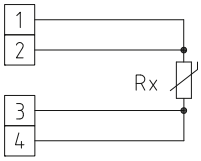

THERMASGARD® ASTF On-wall radiation temperature sensors

Type / WG03	Sensor / Output	Item No.
ASTF	**Pt, Ni, LM235Z, KTY**	**IP 65**
ASTF PT100	Pt100 (according to DIN EN 60 751, B)	1101-1060-1003-000
ASTF PT1000	Pt1000 (according to DIN EN 60 751, class B)	1101-1060-5001-000
ASTF NI1000	Ni1000 (according to DIN EN 43 760, class B, TCR = 6180 ppm / K)	1101-1060-9001-000
ASTF NITK	Ni1000 TK5000 (TCR = 5000 ppm / K), LG - Ni1000	1101-1061-0001-000
ASTF LM235Z	LM235Z (TCR = 10 mV / K; 2.73 V at 0 °C), KP10	1101-1062-1001-000
ASTF KTY81-210	KTY 81-210	1101-1062-0001-000
ASTF	**NTC**	**IP 65**
ASTF NTC1,8K	NTC 1.8 K	1101-1061-2001-000
ASTF NTC10K	NTC 10K	1101-1061-5001-000
ASTF PRECON	NTC 10K Precon	1101-1061-9001-000
ASTF NTC20K	NTC 20K	1101-1061-6001-000

Resistance thermometer **THERM**ASGARD® **RSTF** with passive output in an elegant enclosure made of plastic, with snap-on lid, base with 4-hole attachment for installation on vertically or horizontally installed in-wall flush boxes, with predetermined breaking point for on-wall cable entry, specifically used for temperature detection in larger rooms. The room radiation temperature sensor RSTF determines the effective portion of active radiation or the effective radiant heat at the measured location. Due to the measuring method employed by the dark radiation temperature sensor, an excellent and room-representative measuring result is achieved. In addition there is an independent passive output available to determinate the reference temperature.

RSTF



TECHNICAL DATA

Measuring range:	–30...+75 °C
Sensors / output:	see table, passive (optional also with two sensors)
Connection type:	2-wire connection (4-wire connection on PT100 / PT1000A, optional on other sensors)
Testing current:	< 0.6 mA (Pt1000) < 1.0 mA (Pt100) < 0.3 mA (Ni1000, Ni1000 TK5000) < 2.0 mW (NTC xx) 400 µA...5 mA (LM235Z)
Insulating resistance:	≥ 100 MΩ, at +20 °C (500 V DC)
Process connection:	by screws
Enclosure:	plastic, material ABS Enclosure: pure white (similar to RAL 9010), Semi-globe: black
Dimensions:	85 x 85 x 27 (40) mm (Baldur 1)
Electrical connection:	0.14 - 1.5 mm², via terminal screws
Humidity:	< 95 % r. H.
Protection class:	III (according to EN 60730)
Protection type:	IP 30 (according to EN 60529)

Dimensional drawing **RSTF**

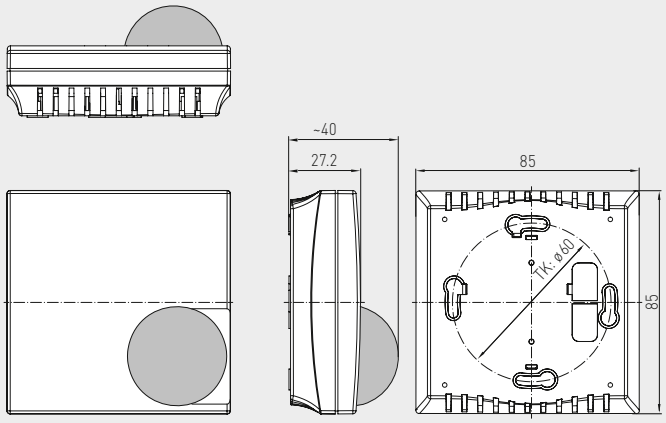

1x two-wire connection
standard

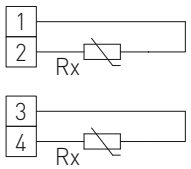

1x two-wire connection
LM235Z (KP10)

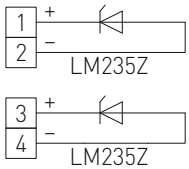

1x four-wire connection
(optional)

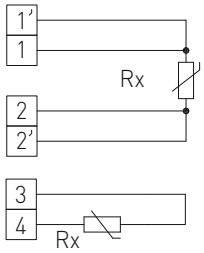

1x four-wire connection
(optional)

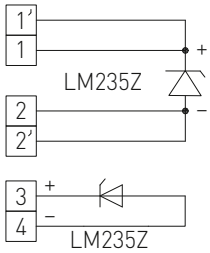

THERMASGARD® RSTF Room radiation temperature sensors

Type / WG03	Sensor / Output	Item No.
RSTF	**Pt, Ni, LM235Z**	**IP 30**
RSTF PT100	Pt100 (according to DIN EN 60751, B)	1101-40C0-1003-000
RSTF PT1000	Pt1000 (according to DIN EN 60751, class B)	1101-40C0-5001-000
RSTF NI1000	Ni1000 (according to DIN EN 43760, class B, TCR = 6180 ppm / K)	1101-40C0-9001-000
RSTF NITK	Ni1000 TK5000 (TCR = 5000 ppm / K), LG-Ni1000	1101-40C1-0001-000
RSTF LM235Z	LM235Z (TCR = 10 mV / K; 2.73 V at 0 °C), KP10	1101-40C2-1001-000
RSTF	**NTC**	**IP 30**
RSTF NTC1,8K	NTC 1.8 K	1101-40C1-2001-000
RSTF NTC10K	NTC 10K	1101-40C1-5001-000
RSTF PRECON	NTC 10K Precon	1101-40C1-9001-000
RSTF NTC20K	NTC 20K	1101-40C1-6001-000



Temperature

ACTIVE SENSORS

Our active **THERM**ASGARD® temperature sensors are easy to install, versatile and meet all requirements important to you. Adjustable and calibratable temperature transmitters with self-diagnostics provide additional flexibility.

APPLICATION RANGE

> Hospitals, museums, schools, hotels, public authorities, institutes and banks
> Sports arenas, holiday centers and movie theaters
> Car dealers
> Ships and shipyards
> Industrial plants and assembly halls
> Power plants and refineries



THERMASGARD®

172 – 209

Room sensors

RTM 1	Room temperature measuring transducer	**175**
FSTM	Room temperature sensor, in-wall	**177**
FSTM-P	Room control units, in-wall	**177**
RPTM 1	Pendulum room temperature measuring transducer	**205**
RPTM 2	Pendulum room temperature measuring transducer	**207**
HSM	Top hat rail measuring transducer	**209**

Outdoor sensors

ATM 2	Outside temperature measuring transducer	**179**

Cable sensors, surface-contact sensors

HFTM	Sleeve sensor with measuring transducer	**199**
ALTM 1	Surface-contact temperature measuring transducer	**201**
ALTM 2	Surface-contact temperature measuring transducer	**203**

Duct sensors, immersion sensors, screw-in sensors

TM 43	Immersion/duct temperature measuring transducer	**183**
TM 65	Immersion/duct temperature measuring transducer	**183**
TM 54	Immersion/duct temperature measuring transducer	**191**
RGTM 2	Smoke gas temperature measuring transducer	**197**
RGTM 1	Smoke gas temperature measuring transducer	**195**
MWTM	Mean value temperature measuring transducer	**189**

Room temperature measuring transducers, calibratable, with multi-range switching and active output

S+S REGELTECHNIK

Calibratable room temperature measuring transducer **THERM**ASGARD® **RTM 1** with continuous output, with or without optional display for displaying the actual temperature in an elegant enclosure made of plastic, with snap-on lid, base with 4-hole attachment for installation on vertically or horizontally installed in-wall flush boxes, with predetermined breaking point for on-wall cable entry, or in enclosure made of stainless steel (top and bottom part are of stainless steel, the lid is screwed on), vandal-proof version e.g. for schools, military barracks, and public buildings. This room temperature transmitter / residential room temperature sensor is used to detect / display temperatures in closed dry rooms, in apartments, in offices, supermarkets and business facilities.

RTM 1



TECHNICAL DATA

Power supply:	24 V AC / DC (± 10 %) for U variant 15...36 V DC for I variant, depending on working resistance, residual ripple stabilised ± 0.3 V
Working resistance:	R_a (ohm) = (U_b-14 V) / 0.02 A for I variant
Load resistance:	R_L > 5 kOhm for U variant
Sensor:	Pt1000, DIN EN 60751, class B
Measuring ranges:	**multi-range switching with 8 switchable measuring ranges,** see table (other ranges optional) operating range –30...+70 °C **with manual zero point correction (± 10 K)**
Deviation, temperature:	typically ± 0.2 K at +25 °C
Output:	0 - 10 V or 4...20 mA
Ambient temperature:	measuring transducer –30...+70 °C
Connection type:	2- or 3-wire connection
Process connection:	by screws
Enclosure:	plastic, material ABS, colour pure white (similar to RAL 9010), (optional stainless steel) **V2A** (1.4301)
Dimensions:	85 x 85 x 27 mm (Baldur 1) 75 x 75 x 25 mm (stainless steel)
Electrical connection:	0.14 - 1.5 mm² via terminal screws
Installation:	wall mounting or on in-wall flush box Ø 55 mm, base with 4-hole for mounting on vertically or horizontally installed in-wall flush boxes for cable entry from the back, with predetermined breaking point for on-wall cable entry from top / bottom in case of plain on-wall installation
Humidity:	< 95 % r. H., non-precipitating air
Protection class:	III (according to EN 60 730)
Protection type:	IP 30 (according to EN 60 529)
Standards:	CE conformity, electromagnetic compatibility according to EN 61326, according to EMC directive 2014 / 30 / EU
Optional:	Two-line **display with illumination**, cutout 36 x 15 mm (W x H), for displaying the **ACTUAL temperature** and the **internal diagnostics** (sensor breakage, sensor short circuit) see beginning of this chapter!

Measuring ranges (adjustable)	DIP 1	DIP 2	DIP 3
–20 °C...+150 °C	**ON**	**ON**	**ON**
–50 °C... +50 °C	OFF	**ON**	**ON**
–20 °C... +80 °C	**ON**	OFF	**ON**
–30 °C... +60 °C	OFF	OFF	**ON**
0 °C... +40 °C	**ON**	**ON**	OFF
0 °C... +50 °C*	OFF	**ON**	OFF
0 °C...+100 °C	**ON**	OFF	OFF
0 °C...+150 °C	OFF	OFF	OFF

* (default / fixed with display)

Display and internal diagnostics — **RTM 1 - U - Display** / **RTM 1 - I - Display**



Standard



Sensor breakage



Sensor short circuit

3-wire connection — **RTM 1 - U without display**

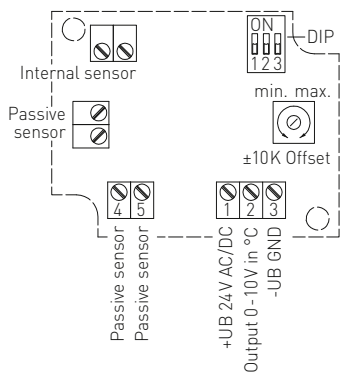

2-wire connection — **RTM 1 - I without display**

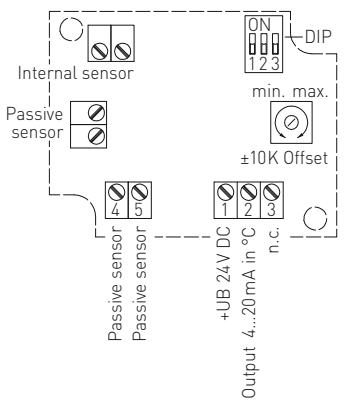

2- or 3-wire connection — **RTM 1 - xx with display**

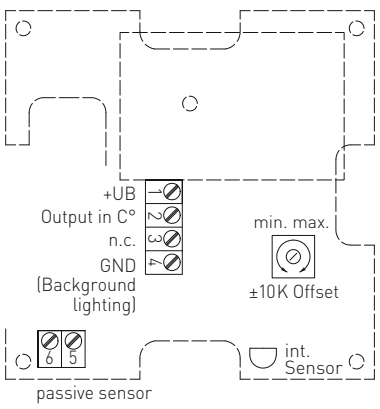

Dimensional drawing — Enclosure **Baldur 1**

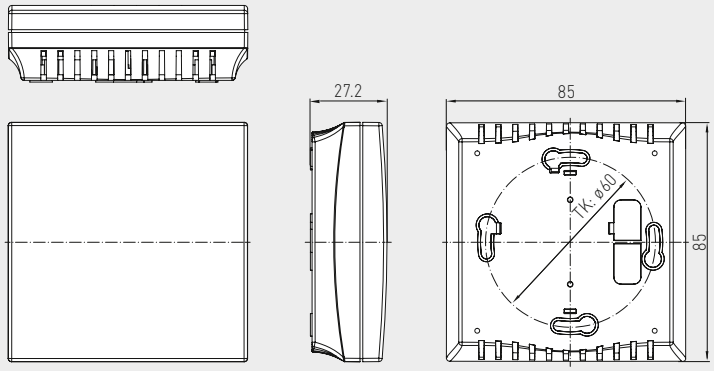

RTM 1
with display



Dimensional drawing — Enclosure **stainless steel**

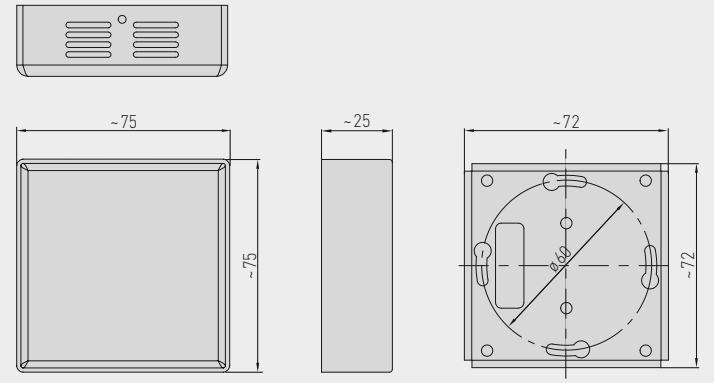

RTM 1
(stainless steel)







Dependency of output voltage on output current

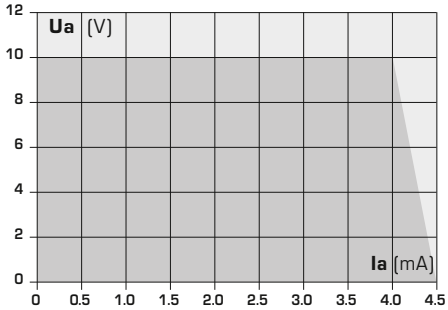

THERMASGARD® RTM 1 Room temperature measuring transducers

Type / WG01	Sensor	Output	Features	Display	Item No.
RTM1-U					**IP30, U-variant**
RTM1-U	Pt1000	0-10 V	–		1101-41A1-0000-200
RTM1-U DISPLAY	Pt1000	0-10 V	Display*	■	1101-41A1-2000-200
RTM1-U VA	Pt1000	0-10 V	Stainless steel enclosure **V2A** (1.4301)		1101-4151-0000-200
RTM1-I					**IP30, I-variant**
RTM1-I	Pt1000	4...20 mA	–		1101-41A2-0000-200
RTM1-I DISPLAY	Pt1000	4...20 mA	Display*	■	1101-41A2-2000-200
RTM1-I VA	Pt1000	4...20 mA	Stainless steel enclosure **V2A** (1.4301)		1101-4152-0000-200
Extra charge:	Other ranges optional				
Note:	* When equipped with display, the measuring range of 0...+50 °C is fixed.				

THERMASGARD® FSTM
THERMASGARD® FSTM-P

**Room temperature sensor or measuring transducer,
in-wall in the panel switch programme,
with active output**

NEW

S+S REGELTECHNIK

The room sensor **THERM**ASGARD® **FSTM / FSTM-P** in the in-wall enclosure, optionally with potentiometer, is used for measuring the room temperature, and for setpoint adjustment. It converts the measured values into a standard signal of 0-10 V. A digital, long-term stable sensor is used for temperature measurement.

The in-wall sensor is mounted in high-quality panel switch programmes, ideally of the brands Gira, Berker, Merten, Jung, Siemens or Busch-Jaeger (using in-wall adapters, no setpoint adjustment possible) either individually or in combination with light switches, socket outlets, etc.

It is used in non-aggressive, dust-free environments, in refrigeration, air conditioning and clean room technology, and in interior rooms, such as living rooms, offices, hotels, etc.

Mounting diagram **in-wall**

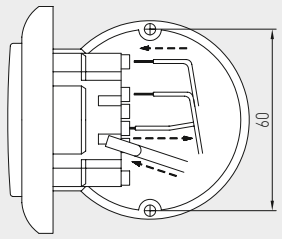

TECHNICAL DATA

Power supply:	24 V AC / DC (± 10 %)
Power consumption:	< 1.1 W / 24 V DC; < 2.2 VA / 24 V AC
TEMPERATURE	
Sensor:	**digital temperature sensor,** low hysteresis, high long-term stability
Long-term stability:	± 1 % per year
Measuring range:	0...+50 °C
Deviation, temperature:	typically ± 0.8 K at +25 °C
Output, temperature:	0-10 V
POTENTIOMETER	
Output, potentiometer:	0-10 V
Mounting:	in-wall flush box Ø 55 mm
Electrical connection:	0.14 - 1.5 mm², using plug terminals
Ambient temperature:	Storage –35...+85 °C; Operation 0...+50 °C
Permitted humidity:	max. 90 % r.H., non-precipitating air
Medium:	clean air and other non-aggressive, non-combustible gases
Protection class:	III (according to EN 60 730)
Protection type:	IP 20 (according to 60 529)
Standards:	CE-conformity, electromagnetic compatibility according to EN 61 326, EMC Directive 2014 / 30 / EU
SWITCH PROGRAMME	
Manufacturer:	GIRA System 55 (other switch programmes, manufacturers, colours as well as prices available upon request)
Enclosure:	plastic, the standard colour is pure glossy white (similar to RAL 9010) (other colours are available upon request with colour variants depending on the respective light switch programme)

Connection diagram **FSTM**

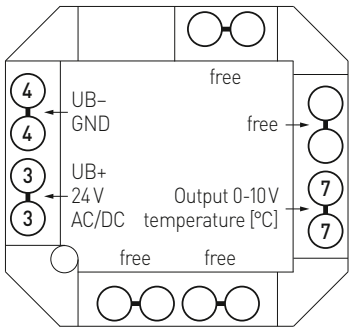

Connection diagram **FSTM-P**

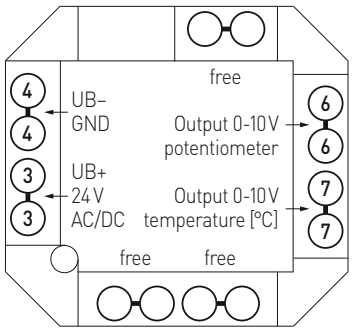

Dimensional drawing **FSTM**

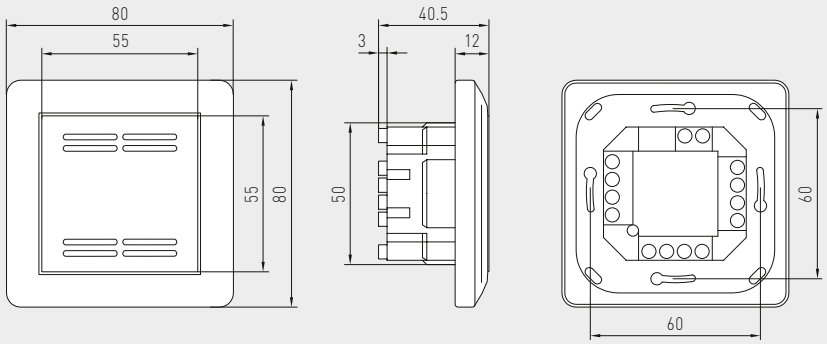

FSTM
Standard



Dimensional drawing **FSTM-P**

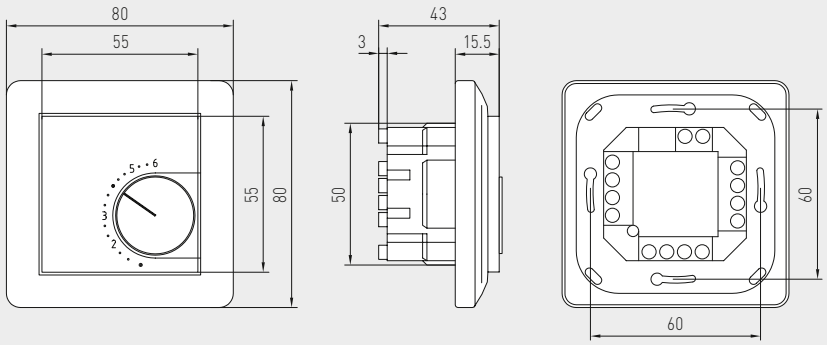

FSTM-P
with potentiometer



Temperature table
MR: 0...+50 °C

°C	U_A [V]
0	0.0
5	1.0
10	2.0
15	3.0
20	4.0
25	5.0
30	6.0
35	7.0
40	8.0
45	9.0
50	10.0

THERMASGARD® FSTM Room temperature sensor or measuring transducer, in-wall
THERMASGARD® FSTM-P Room temperature sensor or measuring transducer, in-wall with potentiometer

Type / WG02	Measuring Range Temperature	Output Temperature	Potentiometer	Item No.
FSTM				
FSTM-U	0...+50 °C	0-10 V	–	1101-9121-0000-162
FSTM-P				
FSTM-U P	0...+50 °C	0-10 V	0-10 V	1101-9121-0004-282

THERMASGARD® ATM 2

Outside temperature / wet room temperature measuring transducers, calibratable, with multi-range switching and active output

S+S REGELTECHNIK

Calibratable outside temperature measuring transducer **THERM**ASGARD® **ATM 2** with eight switchable measuring ranges, internal or remote sensor, continuous output, terminal box enclosure made of impact-resistant plastic, enclosure cover with quick-locking screws, with or without optional display. For the detection of outside temperatures, temperatures in wet room areas, e.g. for installation on outside walls, in cold storage buildings and greenhouses, in the industrial sector and in agriculture. Installation in outdoor areas preferably at the north side of a building or in a protected place. In cases of direct solar irradiation, we recommend the use of our **WS01** or **WS04** sun protection hood (accessory) or the device version with installed sun protection hood **SS02** (available upon request). Adjustment / fine adjustment by the user is possible (zero point offset is adjustable).

ATM 2



TECHNICAL DATA

Power supply:	24 V AC / DC (± 10 %) for U variant 15...36 V DC for I variant, depending on working resistance, residual ripple stabilised ± 0.3 V
Working resistance:	R_a (ohm) = (U_b -14 V) / 0.02 A for I variant
Load resistance:	R_L > 5 kOhm for U variant
Power consumption:	< 1.0 VA / 24 V DC; < 2.2 VA / 24 V AC
Sensor:	Pt1000, DIN EN 60751, class B, (**Perfect Sensor Protection**) sensor inside external stainless steel sensor tube, **V4A** (1.4571)
Measuring ranges:	**multi-range switching with 8 switchable measuring ranges,** see table (other ranges optional) operating range –30...+70 °C **with manual zero point correction (± 10 K)**
Deviation, temperature:	typically ± 0.2 K at +25 °C
Output:	0 - 10 V or 4...20 mA
Ambient temperature:	measuring transducer –30...+70 °C
Connection type:	2- or 3-wire connection
Process connection:	by screws
Enclosure:	plastic, UV-stabilised, material polyamide, 30 % glass-globe reinforced, with quick-locking screws (slotted / Phillips head combination), colour traffic white (similar to RAL 9016), enclosure cover for display is transparent!
Enclosure dimensions:	72 x 64 x 37.8 mm (Tyr 1 without display) 72 x 64 x 43.3 mm (Tyr 1 with display)
Cable gland:	M 16 x 1.5, including strain relief, exchangeable, max. inner diameter 10.4 mm
Electrical connection:	0.14 - 1.5 mm² via terminal screws
Humidity:	< 95 % r. H., non-precipitating air
Protection class:	III (according to EN 60 730)
Protection type:	**IP 65** (according to EN 60 529)
Standards:	CE conformity, electromagnetic compatibility according to EN 61326, according to EMC directive 2014 / 30 / EU
Optional:	Two-line **display with illumination**, cutout approx. 36 x 15 mm (W x H), for displaying the **ACTUAL temperature** and the **internal diagnostics** (measuring range exceeded, measuring range not reached, sensor breakage, sensor short circuit) see beginning of this chapter!

ATM 2
with SS-02



3-wire connection **ATM 2-U**

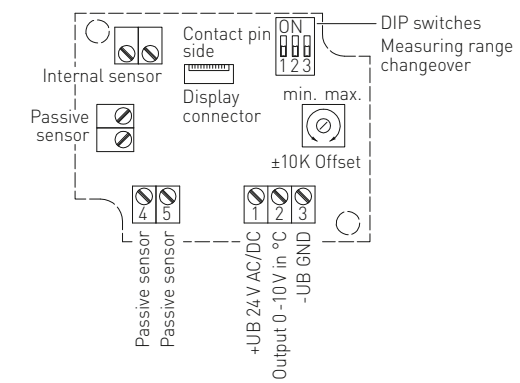

2- or 3-wire connection* **ATM 2-I**

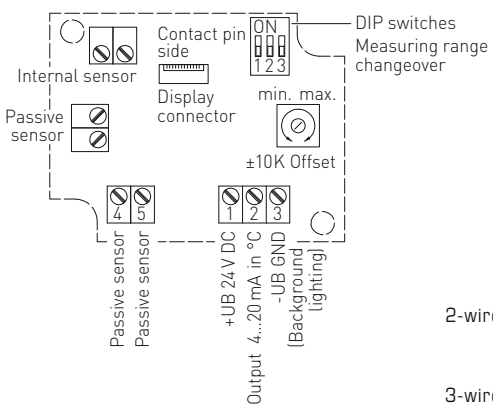

Connection*:

2-wire connection for devices with / without display (not illuminated)

3-wire connection for devices with illuminated display

Dimensional drawing

ATM 2

with display

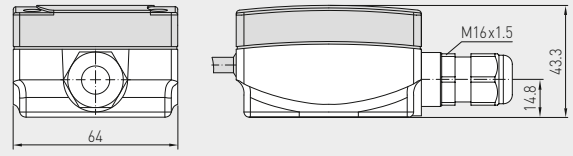

without display

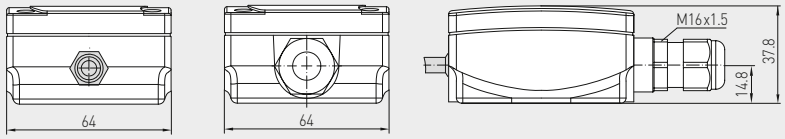

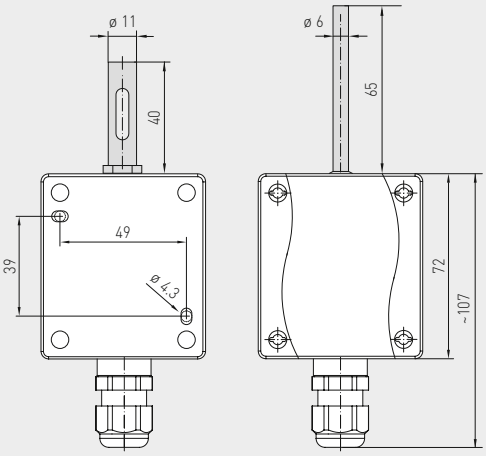

with SS-02 without SS-02



ATM 2
with display



High-performance encapsulation against vibration, mechanical stress and humidity

PS-PROTECTION
PERFECT SENSOR PROTECTION



Measuring ranges (adjustable)	DIP 1	DIP 2	DIP 3
–20…+150 °C	**ON**	**ON**	**ON**
–50… +50 °C	OFF	**ON**	**ON**
–20… +80 °C	**ON**	OFF	**ON**
–30… +60 °C	OFF	OFF	**ON**
0… +40 °C	**ON**	**ON**	OFF
0… +50 °C (default)	OFF	**ON**	OFF
0…+100 °C	**ON**	OFF	OFF
0…+150 °C	OFF	OFF	OFF

Dependency of output voltage on output current

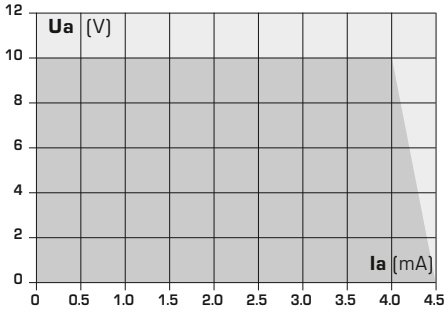

THERMASGARD® ATM 2 Outside temperature / wet room temperature measuring transducers

Type / WG01	Sensor	Output	Display	Item No.
ATM 2-I				**IP 65, I-variant**
ATM2-I	Pt1000	4…20 mA		1101-1142-0009-900
ATM2-I DISPLAY	Pt1000	4…20 mA	■	1101-1142-2009-900
ATM 2-U				**IP 65, U-variant**
ATM2-U	Pt1000	0-10 V		1101-1141-0009-900
ATM2-U DISPLAY	Pt1000	0-10 V	■	1101-1141-2009-900
Extra charge:	Other ranges optional with sun protection hood **SS02**			on request

Accessories		
WS-01	**Sun and ball-impact protection hood,** 184 x 180 x 80 mm, stainless steel **V2A** (1.4301)	7100-0040-2000-000
WS-04	**Weather and sun protection hood,** 130 x 180 x 135 mm, stainless steel **V2A** (1.4301)	7100-0040-7000-000
	For further information see last chapter!	

THERMASGARD® TM 43
THERMASGARD® TM 65

Immersion / screw-in / duct temperature measuring transducer, calibratable, with multi-range switching and active output

S+S REGELTECHNIK

Patented quality product (Immersion sensor patent no. DE 10 2012 017 500.0)
Calibratable temperature measuring transducer **THERM**ASGARD® **TM 43** with eight switchable measuring ranges, continuous linear output, straight protective tube, enclosure made from impact-resistant plastic with snap-on lid.
Calibratable temperature measuring transducer **THERM**ASGARD® **TM 65** with eight switchable measuring ranges, continuous linear output, straight protective tube, enclosure made from impact-resistant plastic with quick-locking screws, **with/without optional display**.
For the detection of temperatures in liquid or gaseous media. For aggressive media, stainless steel immersion sleeves must be used. It is used e.g. in piping systems, in heating technology, in storage tanks, in district heating compact stations, in hot-water and cold-water systems, in oil and lubricant circulation systems, in mechanical, apparatus and plant engineering as well as in the entire industrial sector. These temperature measuring transducers are factory-calibrated.
Adjustment / fine adjustment by the user is possible (zero point offset is adjustable).

TM 43
with snap-on lid
(IP 43)



TECHNICAL DATA

Power supply:	24 V AC / DC (± 10 %) for U variant 15...36 V DC for I variant, depending on working resistance, residual ripple stabilised ± 0.3 V
Working resistance:	R_a (ohm) = (U_b -14 V) / 0.02 A for I variant
Load resistance:	R_L > 5 kOhm for U variant
Power consumption:	< 1.0 VA / 24 V DC; < 2.2 VA / 24 V AC
Sensor:	Pt1000, DIN EN 60751, class B (**Perfect Sensor Protection**)
Measuring ranges:	**multi-range switching with 8 switchable measuring ranges,** see table (other ranges optional) **with manual zero point correction (± 10 K)**
Deviation, temperature:	typically ± 0.2 K at +25 °C
Output:	0 - 10 V or 4...20 mA
Ambient temperature:	measuring transducer –30...+70 °C
Connection type:	2- or 3-wire connection
Enclosure:	plastic, UV-stabilised, material polyamide, 30 % glass-globe reinforced, colour traffic white (similar to RAL 9016), **TM 43 with snap-on lid** **TM 65 with quick-locking screws** (slotted / Phillips head combination), enclosure cover for display is transparent!
Enclosure dimensions:	72 x 64 x 37.8 mm (Tyr 1 / Tyr 01 without display) 72 x 64 x 43.3 mm (Tyr 1 with display)
Cable gland:	M 16 x 1.5, including strain relief, exchangeable, max. inner diameter 10.4 mm
Electrical connection:	0.14 - 1.5 mm² via terminal screws on circuit board
Protective tube:	stainless steel, **V4A** (1.4571), Ø = 6 mm, inserted length (EL) = 50 - 400 mm (see table)
Humidity:	< 95 % r. H., non-precipitating air
Protection class:	III (according to EN 60 730)
Protection type:	**TM 43 IP 43** (according to EN 60 529) **TM 65 IP 65** (according to EN 60 529)
Standards:	CE conformity, electromagnetic compatibility according to EN 61326, according to EMC directive 2014 / 30 / EU
Optional:	two-line **display with illumination**, cutout approx. 36 x 15 mm (W x H), for displaying the **ACTUAL temperature** and the **internal diagnostics** (measuring range exceeded, measuring range not reached, sensor breakage, sensor short circuit)
ACCESSORIES	
MF-15-K	**Mounting flange,** plastic, 56.8 x 84.3 mm, Ø = 15.2 mm tube gland, T_{max} = +100 °C
TH 08-ms / xx	**Immersion sleeve, brass, nickel-plated,** Ø = 8 mm, T_{max} = +150 °C, p_{max} = 10 bar
TH 08-VA / xx	**Immersion sleeve, stainless steel, V4A** (1.4571), Ø = 8 mm, T_{max} = +600 °C, p_{max} = 40 bar
TH 08-VA / xx / 90	**Immersion sleeve, stainless steel, V4A** (1.4571), with neck tube (90 mm), Ø = 8 mm, T_{max} = +600 °C, p_{max} = 40 bar

High-performance encapsulation against vibration, mechanical stress and humidity

PS-PROTECTION
PERFECT SENSOR PROTECTION

Display and internal diagnostics
THERMASGARD®
Measuring transducer with display



Standard
Measuring range exceeded
Measuring range not reached
Sensor breakage
Sensor short circuit

Dimensional drawing

TM 43
TM 65

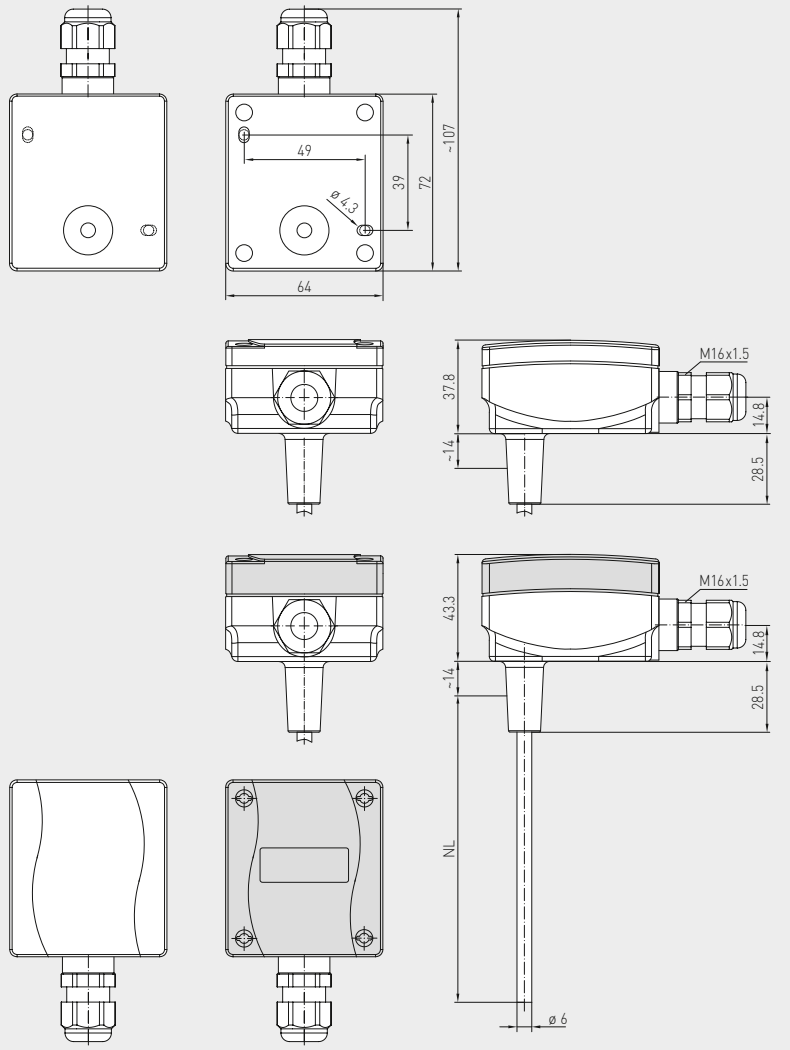

with snap-on lid
(IP 43)

with quick-locking screws
(IP 65)

TM 65
with quick-locking screws
(IP 65)



TM 65
with display and quick-locking screws
(IP 65)



PATENTED



TM 65
Basic device
with accessories

THERMASGARD® TM 43
THERMASGARD® TM 65

Immersion / screw-in / duct temperature measuring transducer, calibratable, with multi-range switching and active output

S+S REGELTECHNIK

3-wire connection **TM 43-U TM 65-U**

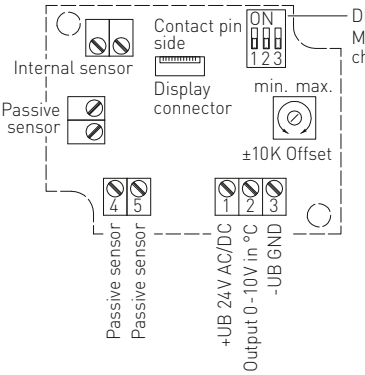

2- or 3-wire connection* **TM 43-I TM 65-I**

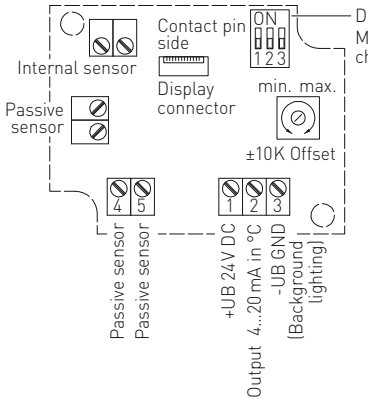

Connection*:
2-wire connection for devices with / without display (not illuminated)
3-wire connection for devices with illuminated display

Measuring ranges (adjustable)	DIP 1	DIP 2	DIP 3
–20...+150 °C	**ON**	**ON**	**ON**
–50... +50 °C	OFF	**ON**	**ON**
–20... +80 °C	**ON**	OFF	**ON**
–30... +60 °C	OFF	OFF	**ON**
0... +40 °C	**ON**	**ON**	OFF
0... +50 °C (default)	OFF	**ON**	OFF
0...+100 °C	**ON**	OFF	OFF
0...+150 °C	OFF	OFF	OFF

Dependency of output voltage on output current

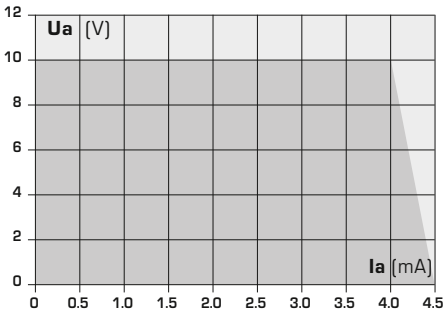





TM 65
with display and quick-locking screws (IP 65)



TM 65
with quick-locking screws (IP 65)



TM 43
with snap-on lid (IP 43)



THERMASGARD® TM 43	Temperature measuring transducer (basic device with snap-on lid), *Standard*		
Type / WG01B	**Output**	**Inserted Length (EL)**	**Item No.**
TM 43-I			**IP 43, I-variant**
TM43-I 50MM	4...20 mA	**50 mm**	1101-7112-0019-900
TM43-I 100MM	4...20 mA	**100 mm**	1101-7112-0029-900
TM43-I 150MM	4...20 mA	**150 mm**	1101-7112-0039-900
TM43-I 200MM	4...20 mA	**200 mm**	1101-7112-0049-900
TM43-I 250MM	4...20 mA	**250 mm**	1101-7112-0059-900
TM43-I 300MM	4...20 mA	**300 mm**	1101-7112-0069-900
TM 43-U			**IP 43, U-variant**
TM43-U 50MM	0 - 10 V	**50 mm**	1101-7111-0019-900
TM43-U 100MM	0 - 10 V	**100 mm**	1101-7111-0029-900
TM43-U 150MM	0 - 10 V	**150 mm**	1101-7111-0039-900
TM43-U 200MM	0 - 10 V	**200 mm**	1101-7111-0049-900
TM43-U 250MM	0 - 10 V	**250 mm**	1101-7111-0059-900
TM43-U 300MM	0 - 10 V	**300 mm**	1101-7111-0069-900

THERMASGARD® TM 65	Temperature measuring transducer (basic device with quick-locking screws), *Premium*			
Type / WG01	**Output**	**Inserted Length (EL)**	**Display**	**Item No.**
TM 65-I				**IP 65, I-variant**
TM65-I 50MM	4...20 mA	**50 mm**		1101-7122-0019-900
TM65-I 50MM DISPLAY	4...20 mA	**50 mm**	■	1101-7122-2019-900
TM65-I 100MM	4...20 mA	**100 mm**		1101-7122-0029-900
TM65-I 100MM DISPLAY	4...20 mA	**100 mm**	■	1101-7122-2029-900
TM65-I 150MM	4...20 mA	**150 mm**		1101-7122-0039-900
TM65-I 150MM DISPLAY	4...20 mA	**150 mm**	■	1101-7122-2039-900
TM65-I 200MM	4...20 mA	**200 mm**		1101-7122-0049-900
TM65-I 200MM DISPLAY	4...20 mA	**200 mm**	■	1101-7122-2049-900
TM65-I 250MM	4...20 mA	**250 mm**		1101-7122-0059-900
TM65-I 250MM DISPLAY	4...20 mA	**250 mm**	■	1101-7122-2059-900
TM65-I 300MM	4...20 mA	**300 mm**		1101-7122-0069-900
TM65-I 300MM DISPLAY	4...20 mA	**300 mm**	■	1101-7122-2069-900
TM65-I 400MM	4...20 mA	**400 mm**		1101-7122-0089-900
TM65-I 400MM DISPLAY	4...20 mA	**400 mm**	■	1101-7122-2089-900
TM 65-U				**IP 65, U-variant**
TM65-U 50MM	0 - 10 V	**50 mm**		1101-7121-0019-900
TM65-U 50MM DISPLAY	0 - 10 V	**50 mm**	■	1101-7121-2019-900
TM65-U 100MM	0 - 10 V	**100 mm**		1101-7121-0029-900
TM65-U 100MM DISPLAY	0 - 10 V	**100 mm**	■	1101-7121-2029-900
TM65-U 150MM	0 - 10 V	**150 mm**		1101-7121-0039-900
TM65-U 150MM DISPLAY	0 - 10 V	**150 mm**	■	1101-7121-2039-900
TM65-U 200MM	0 - 10 V	**200 mm**		1101-7121-0049-900
TM65-U 200MM DISPLAY	0 - 10 V	**200 mm**	■	1101-7121-2049-900
TM65-U 250MM	0 - 10 V	**250 mm**		1101-7121-0059-900
TM65-U 250MM DISPLAY	0 - 10 V	**250 mm**	■	1101-7121-2059-900
TM65-U 300MM	0 - 10 V	**300 mm**		1101-7121-0069-900
TM65-U 300MM DISPLAY	0 - 10 V	**300 mm**	■	1101-7121-2069-900
TM65-U 400MM	0 - 10 V	**400 mm**		1101-7121-0089-900
TM65-U 400MM DISPLAY	0 - 10 V	**400 mm**	■	1101-7121-2089-900
Extra charge:	Other ranges optional			

High-performance encapsulation against vibration, mechanical stress and humidity

PS-PROTECTION
PERFECT SENSOR PROTECTION

Immersion / screw-in / duct temperature measuring transducer, calibratable, with multi-range switching and active output

S+S REGELTECHNIK

One basic device in four variants ...



TM xx +
TH 08-ms / xx

Immersion / screw-in temperature sensor with immersion sleeve, brass, nickel-plated



TM xx +
TH 08-VA / xx

Immersion / screw-in temperature sensor with immersion sleeve, stainless steel, V4A



TM xx +
TH 08-VA / xx / 90

Immersion / screw-in temperature sensor with immersion sleeve with neck tube, stainless steel, V4A



TM xx +
MF-15-K

Duct temperature sensor with mounting flange, plastic

Dimensional drawing
TH 08-ms / xx

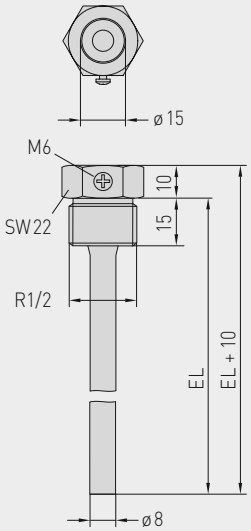

Dimensional drawing
TH 08-VA / xx

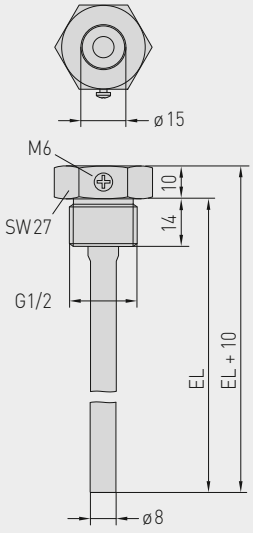

Dimensional drawing
TH 08-VA / xx / 90

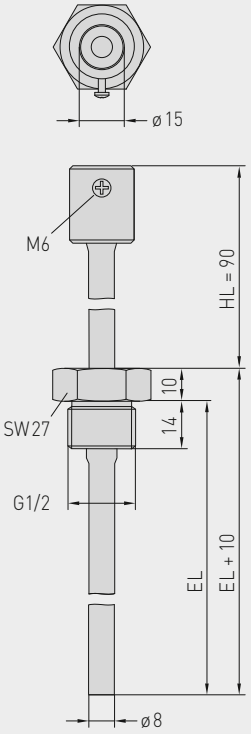

Dimensional drawing
MF-15-K

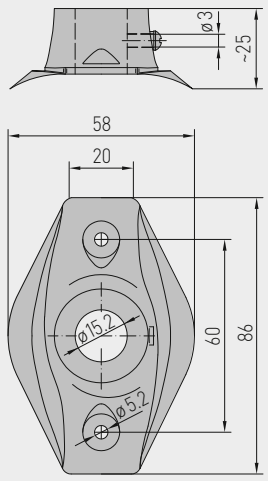

... through combination with accessories:



TH 08-ms / xx

Immersion sleeve, brass, nickel-plated, thread-sealing, conical, according to DIN 10226



TH 08-VA / xx

Immersion sleeve, stainless steel, V4A, flat-sealing, cylindrical, according to DIN 228



TH 08-VA / xx / 90

Immersion sleeve with neck tube, stainless steel, V4A, flat-sealing, cylindrical, according to DIN 228



MF-15-K

Mounting flange, plastic

THERMASGARD® TH 08 Immersion sleeve Ø 8 mm (Accessories)				
Type / WG01B	**p_{max} (static)**	**T_{max}**	**Inserted Length (EL)**	**Item No.**
TH 08-ms / xx	**Brass nickel-plated**			without neck tube
TH08-MS 50MM	10 bar	+150 °C	**50 mm**	7100-0011-0010-132
TH08-MS 100MM	10 bar	+150 °C	**100 mm**	7100-0011-0020-132
TH08-MS 150MM	10 bar	+150 °C	**150 mm**	7100-0011-0030-132
TH08-MS 200MM	10 bar	+150 °C	**200 mm**	7100-0011-0040-132
TH08-MS 250MM	10 bar	+150 °C	**250 mm**	7100-0011-0050-132
TH08-MS 300MM	10 bar	+150 °C	**300 mm**	7100-0011-0060-132
TH08-MS 350MM	10 bar	+150 °C	**350 mm**	7100-0011-0070-132
TH08-MS 400MM	10 bar	+150 °C	**400 mm**	7100-0011-0080-132
TH 08-VA / xx	**Stainless steel, V4A** (1.4571)			without neck tube
TH08-VA 50MM	40 bar	+600 °C	**50 mm**	7100-0012-0010-132
TH08-VA 100MM	40 bar	+600 °C	**100 mm**	7100-0012-0020-132
TH08-VA 150MM	40 bar	+600 °C	**150 mm**	7100-0012-0030-132
TH08-VA 200MM	40 bar	+600 °C	**200 mm**	7100-0012-0040-132
TH08-VA 250MM	40 bar	+600 °C	**250 mm**	7100-0012-0050-132
TH08-VA 300MM	40 bar	+600 °C	**300 mm**	7100-0012-0060-132
TH08-VA 350MM	40 bar	+600 °C	**350 mm**	7100-0012-0070-132
TH08-VA 400MM	40 bar	+600 °C	**400 mm**	7100-0012-0080-132
TH 08-VA / xx / 90	**Stainless steel, V4A** (1.4571)			**with neck tube** (90 mm)
TH08-VA 50/90MM	40 bar	+600 °C	**50 mm**	7100-0012-0012-132
TH08-VA 100/90MM	40 bar	+600 °C	**100 mm**	7100-0012-0022-132
TH08-VA 150/90MM	40 bar	+600 °C	**150 mm**	7100-0012-0032-132
TH08-VA 200/90MM	40 bar	+600 °C	**200 mm**	7100-0012-0042-132
TH08-VA 250/90MM	40 bar	+600 °C	**250 mm**	7100-0012-0052-132
TH08-VA 300/90MM	40 bar	+600 °C	**300 mm**	7100-0012-0062-132
Note:	inner diameter of socket 15.0 mm For further information see last chapter!			

Mounting flange (Accessories)			
Type / WG01B		**T_{max}**	**Item No.**
MF			
MF-15-K	**Mounting flange,** plastic, 56.8 x 84.3 mm, Ø 15.2 mm tube gland	+100 °C	7100-0032-0000-000
Note:	For further information see last chapter!		

THERMASGARD® MWTM

Mean value / rod / duct temperature measuring transducer, including mounting flange, calibratable, with multi-range switching and active output

S+S REGELTECHNIK



MWTM

Calibratable mean value temperature measuring transducer **THERM**ASGARD® **MWTM** (rod sensor) with eight switchable measuring ranges, continuous output, fully active flexible sensor rod for mean value measurement, plastic-coated copper protective tube (sturdy version), terminal box enclosure made of impact-resistant plastic and enclosure cover with quick-locking screws.

This sensor is used for the detection of average temperatures (mean values) in gaseous media, e.g. in ventilation and air conditioning ducts over the entire cross section, or over a defined length. Laid along a meandering route, it uniformly detects the surrounding temperature as a duct sensor. The mean value sensors are factory-calibrated. Adjustment / fine adjustment by the user is possible (range and zero point are adjustable). The rod sensor is available in lengths of 0.4...20 m and is delivered as standard with a mounting flange. Mounting clamps **MK-05-M** are available as optional accessories.

TECHNICAL DATA

Power supply:	24 V AC / DC (± 10 %) for U variant 15...36 V DC for I variant, depending on working resistance, residual ripple stabilised ± 0.3 V
Working resistance:	R_a (ohm) = (U_b -14 V) / 0.02 A for I variant
Load resistance:	R_L > 5 kOhm for U variant
Power consumption:	< 1.0 VA / 24 V DC; < 2.2 VA / 24 V AC
Sensor:	Pt1000, DIN EN 60751, class B
Measuring ranges:	**multi-range switching** **with 8 switchable measuring ranges,** see table (other ranges optional) T_{min} –30 °C, T_{max} +80 °C **with manual zero point correction (± 10 K)**
Output:	0 - 10 V or 4...20 mA
Ambient temperature:	measuring transducer –30...+70 °C
Connection type:	2- or 3-wire connection
Sleeve:	stainless steel **V4A** (1.4571)
Rod material:	**copper sensor tube, plastic-coated** with spring for buckling protection
Sensor and rod dimensions:	Ø = 5 mm, nominal length NL = 0.4 m / 3 m / 6 m (NL optional up to 20 m)
Active length:	active along the entire sensor length
Enclosure:	plastic, UV-stabilised, material polyamide, 30 % glass-globe reinforced, with quick-locking screws (slotted / Phillips head combination), colour traffic white (similar to RAL 9016), enclosure cover for display is transparent!
Enclosure dimensions:	72 x 64 x 37.8 mm (Tyr 1 without display) 72 x 64 x 43.3 mm (Tyr 1 with display)
Cable gland:	M 16 x 1.5 , including strain relief, exchangeable, max. inner diameter 10.4 mm
Electrical connection:	0.14 - 1.5 mm² via terminal screws on circuit board
Installation:	observe minimum bending radius of 35 mm and permissible vibration load ≤ ½ g
Process connection:	by mounting flange, plastic (galvanised steel optional, see accessories) and mounting clamps **MK-05-M**
Humidity:	< 95 % r. H., non-precipitating air
Protection class:	III (according to EN 60 730)
Protection type:	IP 65 (according to EN 60 529)
Standards:	CE conformity, electromagnetic compatibility according to EN 61326, according to EMC directive 2014 / 30 / EU
Optional:	Two-line **display with illumination,** cutout approx. 36 x 15 mm (W x H), for displaying the **ACTUAL temperature** and the **internal diagnostics** (measuring range exceeded, measuring range not reached, sensor breakage, sensor short circuit)

Display and internal diagnostics
THERMASGARD®
Measuring transducer with display

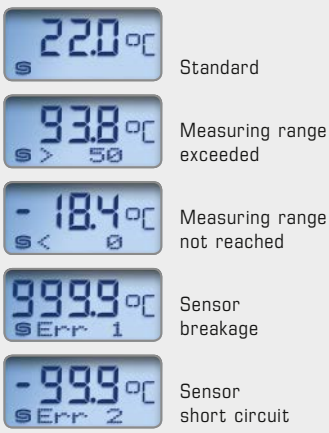

Dimensional drawing

MWTM

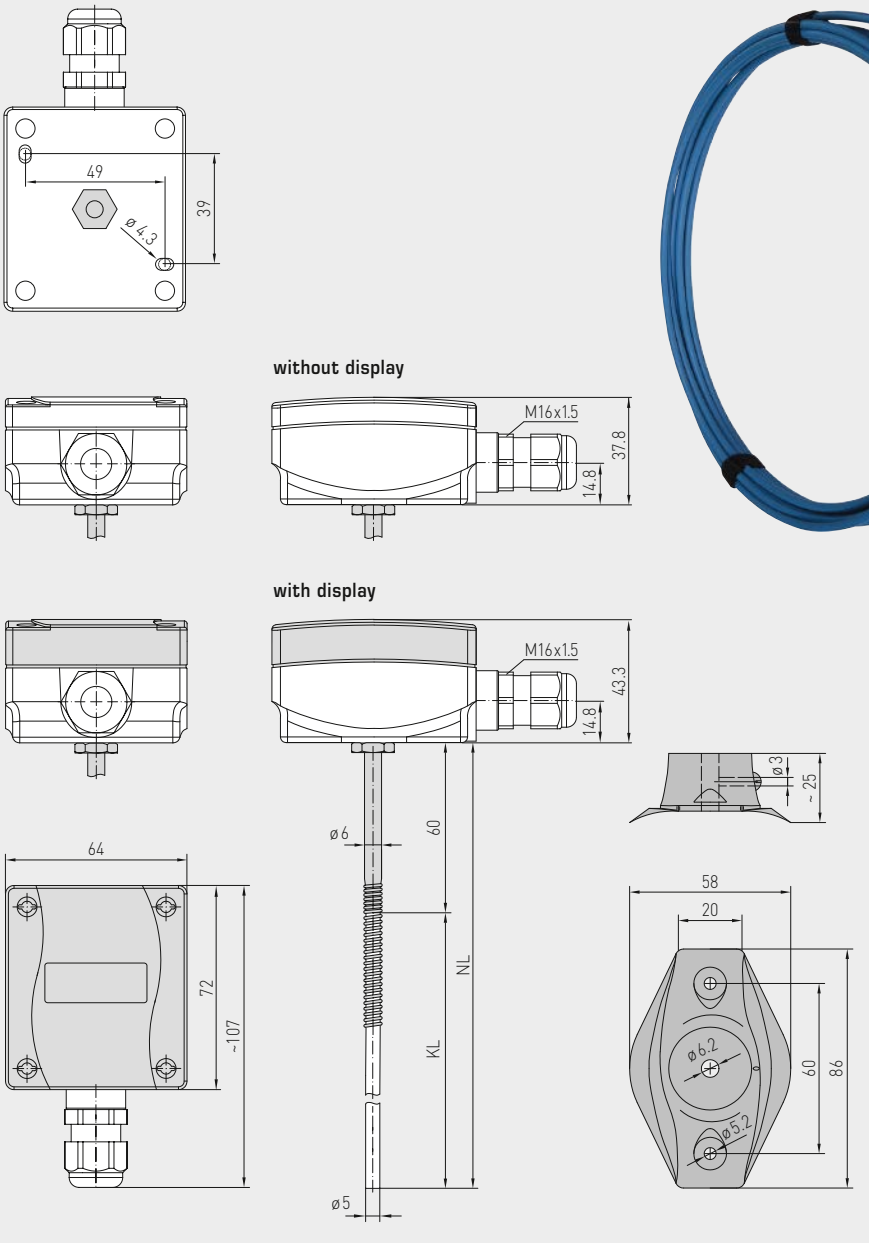

MWTM
with display



MF-06-K
Mounting flange,
plastic



Mean value / rod / duct temperature measuring transducer, including mounting flange, calibratable, with multi-range switching and active output

S+S REGELTECHNIK

3-wire connection **MWTM-U**

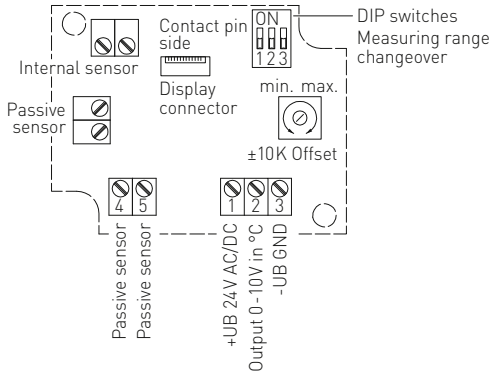

2- or 3-wire connection* **MWTM-I**

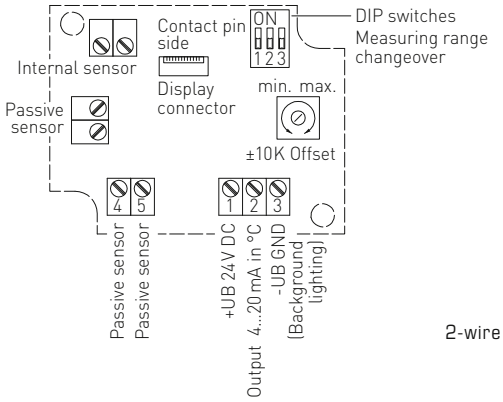

Connection*:

2-wire connection for devices with / without display (not illuminated)

3-wire connection for devices with illuminated display

Measuring ranges (adjustable)	DIP 1	DIP 2	DIP 3
–20...+150 °C	**ON**	**ON**	**ON**
–50... +50 °C	OFF	**ON**	**ON**
–20... +80 °C	**ON**	OFF	**ON**
–30... +60 °C	OFF	OFF	**ON**
0... +40 °C	**ON**	**ON**	OFF
0... +50 °C (default)	OFF	**ON**	OFF
0...+100 °C	**ON**	OFF	OFF
0...+150 °C	OFF	OFF	OFF

Dependency of output voltage on output current

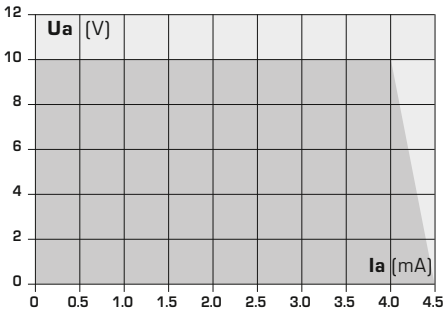







Mean value / rod / duct temperature measuring transducer, including mounting flange, calibratable, with multi-range switching and active output

Dimensional drawing **MF-06-K**

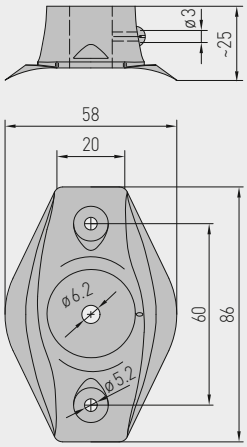

Dimensional drawing **MF-06-M**

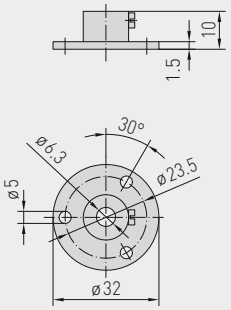

Dimensional drawing **KRD-04**

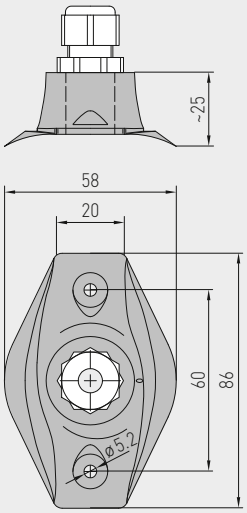

Dimensional drawing **MK-05-M**

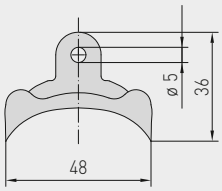

MF-06-K
Mounting flange, plastic

MF-06-M
Mounting flange, metal

KRD-04
Capillary tube gland bracket, plastic

MK-05-M
Galvanised steel mounting clamps









THERMASGARD® **MWTM**	Mean value / rod / duct temperature measuring transducer			
Type / WG01	**Sensor**	**Output**	**Rod Length**	**Item No.**
MWTM-I				**IP65, I-Variante**
MWTM-I 0,4M	Pt1000	4...20 mA	**0.4 m**	1101-3132-0089-900
MWTM-I 3M	Pt1000	4...20 mA	**3.0 m**	1101-3132-0239-900
MWTM-I 6M	Pt1000	4...20 mA	**6.0 m**	1101-3132-0269-900
MWTM-U				**IP65, U-Variante**
MWTM-U 0,4M	Pt1000	0 - 10 V	**0.4 m**	1101-3131-0089-900
MWTM-U 3M	Pt1000	0 - 10 V	**3.0 m**	1101-3131-0239-900
MWTM-U 6M	Pt1000	0 - 10 V	**6.0 m**	1101-3131-0269-900
Extra charge:	Other ranges optional Two-line **display** with illumination Per meter sensor cable (from 6 m to max. 20 m)			on request

Accessories		
MF-06-K	**Mounting flange,** plastic (included in the scope of delivery)	7100-0030-1000-000
MF-06-M	**Mounting flange,** metal (Galvanised steel), Ø 35 mm	7100-0030-5000-000
KRD-04	**Capillary tube gland bracket,** plastic	7100-0030-7000-000
MK-05-M	**Mounting clamps,** galvanised steel (6 pieces) (for NL = 3.0 m / 6.0 m included in the scope of delivery)	7100-0034-0000-000
	For further information see last chapter!	

Immersion / screw-in / duct temperature measuring transducer, calibratable, with multi-range switching and active output

S+S REGELTECHNIK

Calibratable temperature sensor **THERM**ASGARD® **TM 54** with eight switchable measuring ranges, connecting head made of aluminium, continuous output, and separate stainless steel immersion sleeve for heavy-duty applications. This immersion sensor is used for the detection of temperatures in liquid or gaseous media. Applications in piping systems, in heating technology, in storage tanks, in district heating compact stations, in hot and cold-water systems, in oil and lubricant circulation systems, in mechanical, apparatus and plant engineering as well as in the entire industrial sector. These temperature transmitters are factory-calibrated.
Adjustment / fine adjustment by the user is possible (range and zero point are adjustable).

TM 54
Top view



TM 54
Connecting head



TECHNICAL DATA

Power supply:	24 V AC / DC (± 10 %) for U variant 15...36 V DC for I variant, depending on working resistance, residual ripple stabilised ± 0.3 V
Working resistance:	R_a (ohm) = (U_b -14 V) / 0.02 A for I variant
Load resistance:	R_L > 5 kOhm for U variant
Power consumption:	< 1.0 VA / 24 V AC / DC; < 0.55 VA / 24 V DC
Sensor:	Pt1000, DIN EN 60571, class B (**Perfect Sensor Protection**)
Measuring ranges:	**multi-range switching with 8 switchable measuring ranges,** see table (other ranges optional) T = +150°C **with manual zero point correction (± 10 K)**
Deviation, temperature:	typically ± 0.2 K at +25 °C
Output:	0 - 10 V or 4...20 mA
Ambient temperature:	measuring transducer –30...+70 °C
Connection type:	2- or 3-wire connection
Protective tube:	stainless steel, **V4A** (1.4571) Ø = 6 mm, inserted length (EL) = 50 - 400 mm (see table)
Dimensions:	see dimensional drawing
Electrical connection:	0.2 - 1.5 mm², via push-in terminal
Connecting head:	form B, material aluminium, colour white aluminium (similar to RAL 9006), M 20 x 1.5
Humidity:	< 95 % r. H., non-precipitating air
Protection class:	III (according to EN 60 730)
Protection type:	IP 54 (according to EN 60 529), IP 65 (optional)
Standards:	CE conformity, electromagnetic compatibility according to EN 61 326, EMC directive 2014 / 30 / EU
ACCESSORIES	
MF-06-M	**Mounting flange,** metal, galvanised steel, Ø = 32 mm, Ø = 6.3 mm tube gland, T_{max} = +700 °C
TH-ms / xx	**Immersion sleeve, brass, nickel-plated,** Ø = 8 mm, T_{max} = +150 °C, p_{max} = 10 bar
TH-VA / xx	**Immersion sleeve, stainless steel, V4A** (1.4571), Ø = 8 mm, T_{max} = +600 °C, p_{max} = 40 bar
TH-VA / xx / 90	**Immersion sleeve, stainless steel, V4A** (1.4571), with neck tube (90 mm), Ø = 8 mm, T_{max} = +600 °C, p_{max} = 40 bar

High-performance encapsulation against vibration, mechanical stress and humidity

PS-PROTECTION
PERFECT SENSOR PROTECTION

Connecting diagram **TM 54-I**

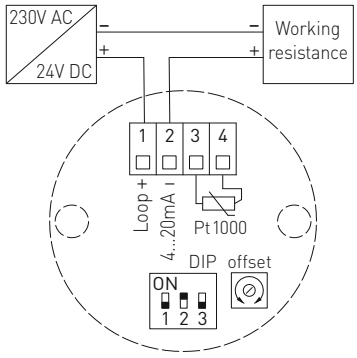

Connecting diagram **TM 54-U**

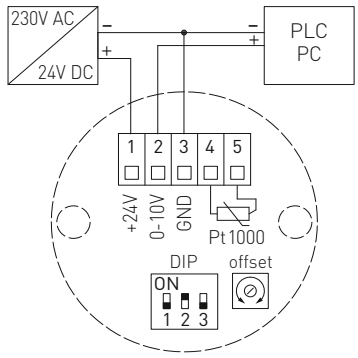

Immersion / screw-in / duct temperature measuring transducer, calibratable, with multi-range switching and active output

Dimensional drawing **TM 54**

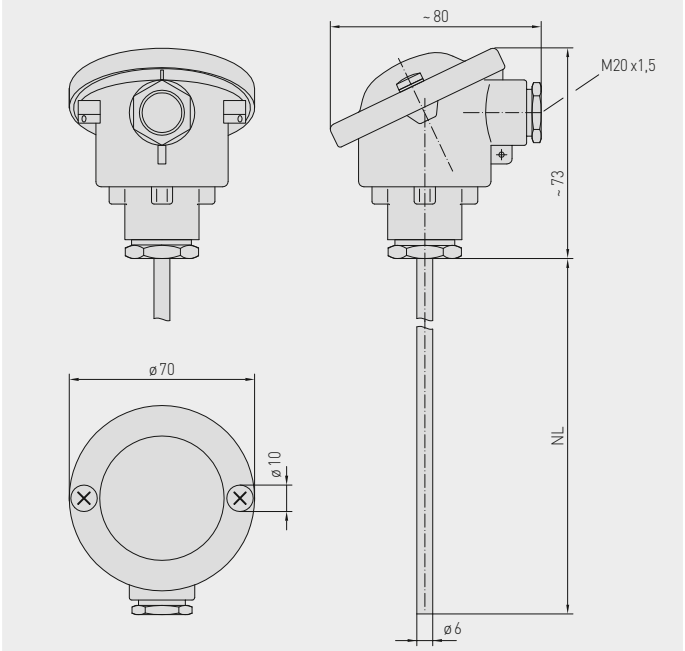

TM 54



Measuring ranges (adjustable)	DIP 1	DIP 2	DIP 3
–20…+150 °C	**ON**	**ON**	**ON**
–50… +50 °C	OFF	**ON**	**ON**
–20… +80 °C	**ON**	OFF	**ON**
–30… +60 °C	OFF	OFF	**ON**
0… +40 °C	**ON**	**ON**	OFF
0… +50 °C (default)	OFF	**ON**	OFF
0…+100 °C	**ON**	OFF	OFF
0…+150 °C	OFF	OFF	OFF

THERMASGARD® TM 54	Temperature measuring transducers (basic device)			
Type / WG01	**Sensor**	**Output**	**Inserted Length (EL)**	**Item No.**
TM 54-I				**IP 54, I-variant**
TM54-I 50MM	Pt1000	4…20 mA	**50 mm**	1101-7152-0019-910
TM54-I 100MM	Pt1000	4…20 mA	**100 mm**	1101-7152-0029-910
TM54-I 150MM	Pt1000	4…20 mA	**150 mm**	1101-7152-0039-910
TM54-I 200MM	Pt1000	4…20 mA	**200 mm**	1101-7152-0049-910
TM54-I 250MM	Pt1000	4…20 mA	**250 mm**	1101-7152-0059-910
TM54-I 300MM	Pt1000	4…20 mA	**300 mm**	1101-7152-0069-910
TM54-I 350MM	Pt1000	4…20 mA	**350 mm**	1101-7152-0079-910
TM54-I 400MM	Pt1000	4…20 mA	**400 mm**	1101-7152-0089-910
TM 54-U				**IP 54, U-variant**
TM54-U 50MM	Pt1000	0-10 V	**50 mm**	1101-7151-0019-910
TM54-U 100MM	Pt1000	0-10 V	**100 mm**	1101-7151-0029-910
TM54-U 150MM	Pt1000	0-10 V	**150 mm**	1101-7151-0039-910
TM54-U 200MM	Pt1000	0-10 V	**200 mm**	1101-7151-0049-910
TM54-U 250MM	Pt1000	0-10 V	**250 mm**	1101-7151-0059-910
TM54-U 300MM	Pt1000	0-10 V	**300 mm**	1101-7151-0069-910
Extra charge:	Protection type **IP65** (B-Head) Other sensors optional			on request

Immersion / screw-in / duct temperature measuring transducer, calibratable, with multi-range switching and active output

S+S REGELTECHNIK

One basic device in four variants ...



TM 54 +
TH - ms / xx

Immersion / screw-in temperature sensor with immersion sleeve, brass, nickel-plated



TM 54 +
TH - VA / xx

Immersion / screw-in temperature sensor with immersion sleeve, stainless steel, V4A



TM 54 +
TH - VA / xx / 90

Immersion / screw-in temperature sensor with immersion sleeve with neck tube, stainless steel, V4A



TM 54 +
MF - 06 - M

Duct temperature sensor with mounting flange, metal

Dimensional drawing
TH - ms / xx

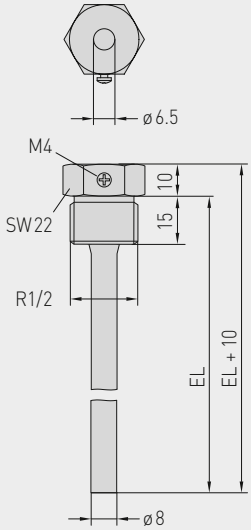

Dimensional drawing
TH - VA / xx

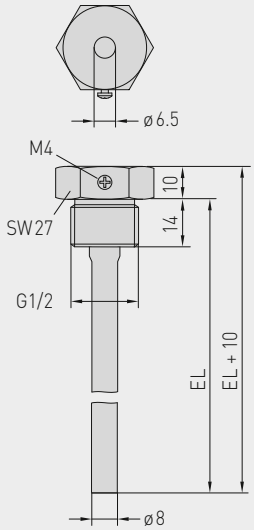

Dimensional drawing
TH - VA / xx / 90

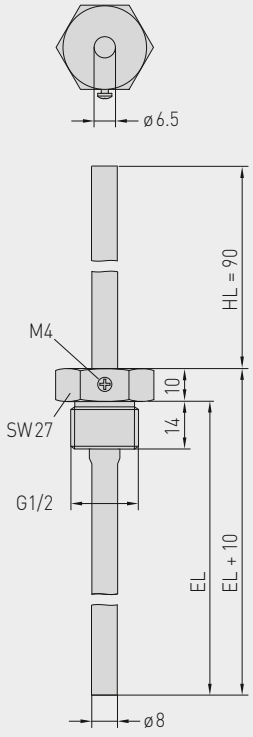

Dimensional drawing
MF - 06 - M

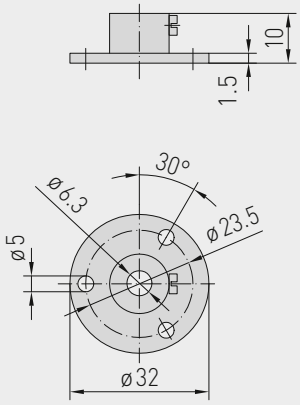

... through combination with accessories:



TH - ms / xx

Immersion sleeve, brass, nickel-plated, thread-sealing, conical, according to DIN 10226



TH - VA / xx

Immersion sleeve, stainless steel, V4A, flat-sealing, cylindrical, according to DIN 228



TH - VA / xx / 90

Immersion sleeve with neck tube, stainless steel, V4A, flat-sealing, cylindrical, according to DIN 228



MF - 06 - M

Mounting flange, metal

THERMASGARD® **TH** Immersion sleeve Ø 8 mm (accessories)				
Type / WG01	**p_{max} (static)**	**T_{max}**	**Inserted Length (EL)**	**Item No.**
TH - ms / xx	**Brass nickel-plated**			without neck tube
TH-MS 50MM	10 bar	+150 °C	**50 mm**	7100-0011-0010-001
TH-MS 100MM	10 bar	+150 °C	**100 mm**	7100-0011-0020-001
TH-MS 150MM	10 bar	+150 °C	**150 mm**	7100-0011-0030-001
TH-MS 200MM	10 bar	+150 °C	**200 mm**	7100-0011-0040-001
TH-MS 250MM	10 bar	+150 °C	**250 mm**	7100-0011-0050-001
TH-MS 300MM	10 bar	+150 °C	**300 mm**	7100-0011-0060-001
TH-MS 350MM	10 bar	+150 °C	**350 mm**	7100-0011-0070-001
TH-MS 400MM	10 bar	+150 °C	**400 mm**	7100-0011-0080-001
TH - VA / xx	**Stainless steel, V4A** (1.4571)			without neck tube
TH-VA 50MM	40 bar	+600 °C	**50 mm**	7100-0012-0010-001
TH-VA 100MM	40 bar	+600 °C	**100 mm**	7100-0012-0020-001
TH-VA 150MM	40 bar	+600 °C	**150 mm**	7100-0012-0030-001
TH-VA 200MM	40 bar	+600 °C	**200 mm**	7100-0012-0040-001
TH-VA 250MM	40 bar	+600 °C	**250 mm**	7100-0012-0050-001
TH-VA 300MM	40 bar	+600 °C	**300 mm**	7100-0012-0060-001
TH-VA 350MM	40 bar	+600 °C	**350 mm**	7100-0012-0070-001
TH-VA 400MM	40 bar	+600 °C	**400 mm**	7100-0012-0080-001
TH - VA / xx / 90	**Stainless steel, V4A** (1.4571)			**with neck tube** (90 mm)
TH-VA 50/90MM	40 bar	+600 °C	**50 mm**	7100-0012-2010-001
TH-VA 100/90MM	40 bar	+600 °C	**100 mm**	7100-0012-2020-001
TH-VA 150/90MM	40 bar	+600 °C	**150 mm**	7100-0012-2030-001
TH-VA 200/90MM	40 bar	+600 °C	**200 mm**	7100-0012-2040-001
TH-VA 250/90MM	40 bar	+600 °C	**250 mm**	7100-0012-2050-001
TH-VA 300/90MM	40 bar	+600 °C	**300 mm**	7100-0012-2060-001
Note:	inner diameter of socket 6.5 mm For further information see last chapter!			

Mounting flange (accessories)			
Type / WG01		**T_{max}**	**Item No.**
MF			
MF-06-M	**Mounting flange,** metal (galvanised steel) Ø 32 mm, tube gland Ø 6.3 mm	+700 °C	7100-0030-5000-000
Note:	For further information see last chapter!		

THERMASGARD® RGTM 1

Duct / smoke gas temperature measuring transducer, including mounting flange, calibratable, with multi-range switching and active output

S+S REGELTECHNIK

Calibratable flue gas measuring transducer **THERM**ASGARD® **RGTM 1** with eight switchable measuring ranges, exchangeable spring-mounted measuring insert and straight protective tube, connecting head made of aluminium, metal mounting flange and continuous output for the detection of high temperatures in gaseous media, e.g. for exhaust air or flue gas temperature measurement. These sensors are factory-calibrated. Adjustment / fine adjustment by the user is possible (range and zero point are adjustable).

TECHNICAL DATA

Power supply:	24 V AC / DC (± 10 %) for U variant 15...36 V DC for I variant, depending on working resistance, residual ripple stabilised ± 0.3 V
Working resistance:	max. 750 Ohm / 24 V DC for I variant
Load resistance:	10 kOhm (load max. 1 mA) for U variant
Power consumption:	< 1.0 VA / 24 V AC / DC < 0.55 VA / 24 V DC
Sensor:	Pt1000, DIN EN 60751, class B, glass sensing resistor (**Perfect Sensor Protection**)
Measuring ranges:	**multi-range switching with 8 switchable measuring ranges,** see table (other ranges optional) **with manual zero point correction (± 10 K)**
Deviation, temperature:	typically ± 0.2 K at +25 °C
Output:	0 - 10 V or 4...20 mA
Ambient temperature:	measuring transducer –30...+70 °C
Connection type:	2- or 3-wire connection
Process connection:	by mounting flange, stainless steel (included in the scope of delivery)
Protective tube:	stainless steel, **V4A** (1.4571), Ø = 8 mm inserted length (EL) = 200 - 400 mm (see table)
Connecting head:	form B, material aluminium, colour white aluminium (similar to RAL 9006), M 20 x 1.5
Electrical connection:	0.2 - 1.5 mm², via push-in terminal
Humidity:	< 95 % r. H., non-precipitating air
Protection class:	III (according to EN 60 730)
Protection type:	IP 54 (according to EN 60 529), IP 65 (optional)
Standards:	CE conformity, electromagnetic compatibility according to EN 61 326, EMC directive 2014 / 30 / EU

RGTM 1
Top view



RGTM 1
Connecting head



High-performance encapsulation against vibration, mechanical stress and humidity

PS-PROTECTION
PERFECT SENSOR PROTECTION



RGTM 1
standard
(IP 54)



RGTM 1
optional
(IP 65)

Connecting diagram **RGTM 1 - I**

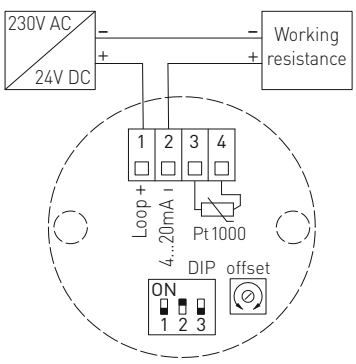

Connecting diagram **RGTM 1 - U**

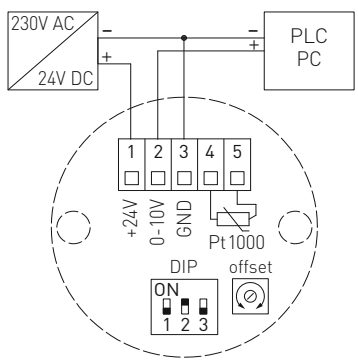

Duct / smoke gas temperature measuring transducer, including mounting flange, calibratable, with multi-range switching and active output

Dimensional drawing **RGTM 1**

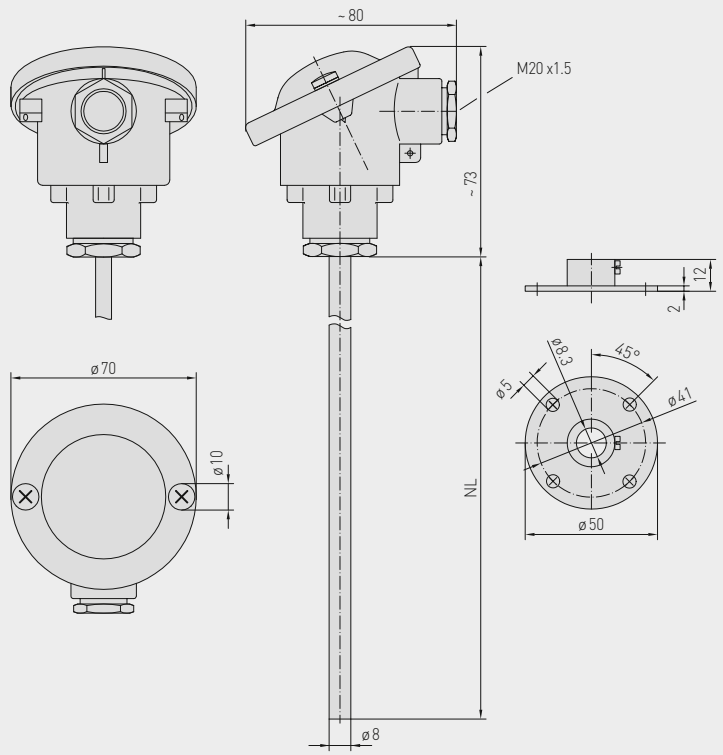

RGTM 1



RGTM 1
Measuring insert with ceramic tubelet

Measuring ranges (adjustable)	DIP 1	DIP 2	DIP 3
–20…+150 °C	**ON**	**ON**	**ON**
0… +50 °C (default)	OFF	**ON**	**ON**
0…+100 °C	**ON**	OFF	**ON**
0…+200 °C	OFF	OFF	**ON**
0…+300 °C	**ON**	**ON**	OFF
0…+400 °C	OFF	**ON**	OFF
0…+500 °C	**ON**	OFF	OFF
0…+600 °C	OFF	OFF	OFF

THERMASGARD® RGTM 1 Duct / smoke gas temperature measuring transducers

Type / WG01	Sensor	Output	Inserted Length (EL)	Item No.
RGTM 1 - I				**IP 54, I-variant**
RGTM1-I 200MM	Pt1000	4…20 mA	**200 mm**	1101-3122-0049-810
RGTM1-I 250MM	Pt1000	4…20 mA	**250 mm**	1101-3122-0059-810
RGTM1-I 300MM	Pt1000	4…20 mA	**300 mm**	1101-3122-0069-810
RGTM1-I 400MM	Pt1000	4…20 mA	**400 mm**	1101-3122-0089-810
RGTM 1 - U				**IP 54, U-variant**
RGTM1-U 200MM	Pt1000	0 - 10 V	**200 mm**	1101-3121-0049-810
RGTM1-U 250MM	Pt1000	0 - 10 V	**250 mm**	1101-3121-0059-810
RGTM1-U 300MM	Pt1000	0 - 10 V	**300 mm**	1101-3121-0069-810
RGTM1-U 400MM	Pt1000	0 - 10 V	**400 mm**	1101-3121-0089-810
Extra charge:	Protection type **IP 65** (B-Head) Other ranges optional			

THERMASGARD® RGTM 2

Screw-in / smoke gas temperature measuring transducer with neck tube, calibratable, with multi-range switching and active output

S+S REGELTECHNIK

The calibratable flue gas / screw-in temperature measuring transducer **THERM**ASGARD® **RGTM 2** with eight switchable measuring ranges, with neck tube, exchangeable spring-mounted measuring insert, straight protective tube, connecting head made of aluminium and continuous output for the detection of high temperatures in gaseous media, e.g. for exhaust air or flue gas temperature measurement. These sensors are factory-calibrated. Adjustment / fine adjustment by the user is possible (range and zero point are adjustable).

TECHNICAL DATA

Power supply:	24 V AC / DC (± 10 %) for U variant 15...36 V DC for I variant, depending on working resistance, residual ripple stabilised ± 0.3 V
Working resistance:	max. 750 Ohm / 24 V DC for I variant
Load resistance:	10 kOhm (load max. 1 mA) for U variant
Power consumption:	< 1.0 VA / 24 V AC / DC < 0.55 VA / 24 V DC
Sensor:	Pt1000, DIN EN 60751, class B, glass sensing resistor (**Perfect Sensor Protection**)
Measuring ranges:	**multi-range switching with 8 switchable measuring ranges,** see table (other ranges optional) **with manual zero point correction (± 10 K)**
Deviation, temperature:	typically ± 0.2 K at +25 °C
Output:	0 - 10 V or 4...20 mA
Ambient temperature:	measuring transducer –30...+70 °C
Connection type:	2- or 3-wire connection
Process connection:	screwed socked with G ½" straight pipe thread
Protective tube:	stainless steel, **V4A** (1.4571), G ½" straight pipe thread, wrench size 27 mm, p_{max} = 40 bar, Ø = 8 mm length of neck tube (HL) = 80 mm inserted length (EL) = 100 - 400 mm (see table)
Connecting head:	form B, material aluminium, colour white aluminium (similar to RAL 9006), M 20 x 1.5
Electrical connection:	0.2 - 1.5 mm², via push-in terminal
Humidity:	< 95 % r. H., non-precipitating air
Protection class:	III (according to EN 60 730)
Protection type:	IP 54 (according to EN 60 529), IP 65 (optional)
Standards:	CE conformity, electromagnetic compatibility according to EN 61 326, EMC directive 2014 / 30 / EU

RGTM 2
Top view



RGTM 2
Connecting head



High-performance encapsulation against vibration, mechanical stress and humidity

PS-PROTECTION
PERFECT SENSOR PROTECTION



RGTM 2
standard
(IP 54)



RGTM 2
optional
(IP 65)

Connecting diagram **RGTM 2 - I**

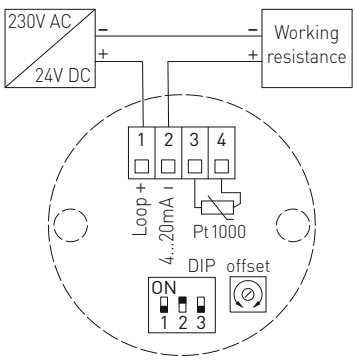

Connecting diagram **RGTM 2 - U**

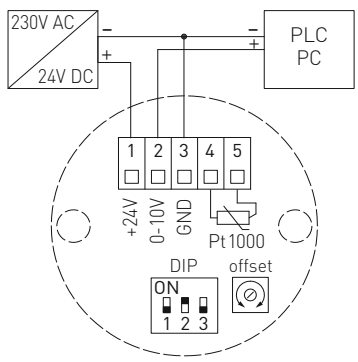

Dimensional drawing **RGTM 2**

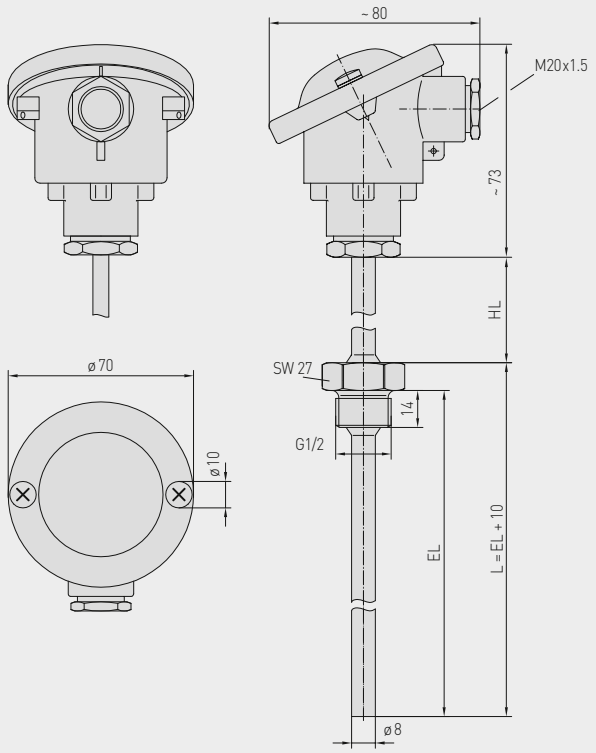

RGTM 2



RGTM 2
Measuring insert with ceramic tubelet

Measuring ranges (adjustable)	DIP 1	DIP 2	DIP 3
–20…+150 °C	**ON**	**ON**	**ON**
0… +50 °C (default)	OFF	**ON**	**ON**
0…+100 °C	**ON**	OFF	**ON**
0…+200 °C	OFF	OFF	**ON**
0…+300 °C	**ON**	**ON**	OFF
0…+400 °C	OFF	**ON**	OFF
0…+500 °C	**ON**	OFF	OFF
0…+600 °C	OFF	OFF	OFF

THERMASGARD® RGTM 2 Screw-in / smoke gas temperature measuring transducer with neck tube

Type / WG01	Sensor	Output	Inserted Length (EL)	Item No.
RGTM 2-I				**IP 54, I-variant**
RGTM2-I 100/80MM	Pt1000	4…20 mA	**100 mm**	1101-2162-0029-810
RGTM2-I 150/80MM	Pt1000	4…20 mA	**150 mm**	1101-2162-0039-810
RGTM2-I 200/80MM	Pt1000	4…20 mA	**200 mm**	1101-2162-0049-810
RGTM2-I 250/80MM	Pt1000	4…20 mA	**250 mm**	1101-2162-0059-810
RGTM2-I 300/80MM	Pt1000	4…20 mA	**300 mm**	1101-2162-0069-810
RGTM2-I 400/80MM	Pt1000	4…20 mA	**400 mm**	1101-2162-0089-810
RGTM 2-U				**IP 54, U-variant**
RGTM2-U 100/80MM	Pt1000	0-10 V	**100 mm**	1101-2161-0029-810
RGTM2-U 150/80MM	Pt1000	0-10 V	**150 mm**	1101-2161-0039-810
RGTM2-U 200/80MM	Pt1000	0-10 V	**200 mm**	1101-2161-0049-810
RGTM2-U 250/80MM	Pt1000	0-10 V	**250 mm**	1101-2161-0059-810
RGTM2-U 300/80MM	Pt1000	0-10 V	**300 mm**	1101-2161-0069-810
RGTM2-U 400/80MM	Pt1000	0-10 V	**400 mm**	1101-2161-0089-810
Extra charge:	Protection type **IP 65** (B-Head) Other ranges optional			

THERMASGARD® HFTM

Sleeve sensors with temperature measuring transducer, calibratable, with multi-range switching and active output

S+S REGELTECHNIK

Calibratable temperature measuring transducer with sleeve sensor **THERM**ASGARD® **HFTM** with eight switchable measuring ranges, continuous output, with or without optional display (displaying the actual temperature), terminal box enclosure made of impact-resistant plastic and enclosure cover with quick-locking screws. The temperature transmitter with remote sensor is used for temperature detection in liquid and gaseous media, e.g. by installation inside an immersion sleeve, or as duct sensor. The sensors are factory-calibrated. Adjustment / fine adjustment by the user is possible (zero point offset is adjustable). Direct and permanent use in liquids is possible in combination with **THE** immersion sleeves (see last chapter).

HFTM



TECHNICAL DATA

Power supply:	24 V AC / DC (± 10 %) for U variant 15...36 V DC for I variant, depending on working resistance, residual ripple stabilised ± 0.3 V
Working resistance:	R_a (ohm) = (U_b -14 V) / 0.02 A for I variant
Load resistance:	R_L > 5 kOhm for U variant
Power consumption:	< 1.0 VA / 24 V DC; < 2.2 VA / 24 V AC
Sensor:	Pt1000, DIN EN 60751, class B (**Perfect Sensor Protection** with IP68)
Measuring ranges:	**multi-range switching with 8 switchable measuring ranges,** see table (other ranges optional) **with manual zero point correction (± 10 K)**
Deviation, temperature:	typically ± 0.2 K at +25 °C
Output:	0 - 10 V or 4...20 mA
Ambient temperature:	measuring transducer –30...+70 °C
Connection type:	2- or 3-wire connection
Protective tube: (sensor sleeve)	stainless steel, **V4A** (1.4571), Ø = 6 mm, nominal length NL = 50 mm (other dimensions optional) cable entry stamped (optional rolled)
Connection cable:	silicone, SiHF, 2 x 0.25 mm², KL = 1.5 m (other lengths and range limits optional, e.g. PTFE leads up to +250 °C or glass fibre with steel wire mesh up to +350°C)
Enclosure:	plastic, UV-stabilised, material polyamide, 30 % glass-globe reinforced, with quick-locking screws (slotted / Phillips head combination), colour traffic white (similar to RAL 9016), enclosure cover for display is transparent!
Enclosure dimensions:	72 x 64 x 37.8 mm (Tyr 1 without display) 72 x 64 x 43.3 mm (Tyr 1 with display)
Cable gland:	M 16 x 1.5, including strain relief, exchangeable, max. inner diameter 10.4 mm
Electrical connection:	0.14 - 1.5 mm² via terminal screws
Humidity:	< 95 % r. H., non-precipitating air
Protection class:	III (according to EN 60 730)
Protection type:	**IP 65** (according to EN 60 529) humidity-tight **stamped** **IP 68** (optional watertight compound-filled*) **rolled** **IP 54** (optional **glass fibre** cable)
Standards:	CE conformity, electromagnetic compatibility according to EN 61326, according to EMC directive 2014 / 30 / EU
Optional:	Two-line **display with illumination,** cutout approx. 36 x 15 mm (W x H), for displaying the **ACTUAL temperature** and the **internal diagnostics** (measuring range exceeded, measuring range not reached, sensor breakage, sensor short circuit)

* High-performance encapsulation against vibration, mechanical stress and humidity

PS-PROTECTION
PERFECT SENSOR PROTECTION

Display and internal diagnostics
THERMASGARD®
Measuring transducer with display



3-wire connection **HFTM-U**

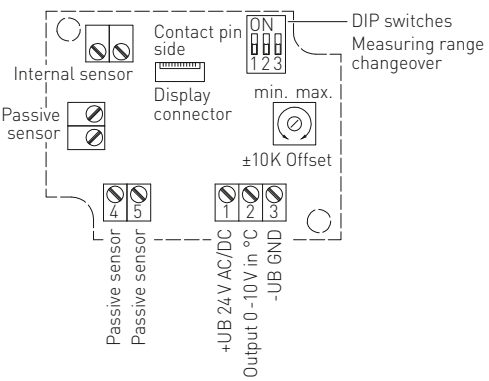

2- or 3-wire connection* **HFTM-I**

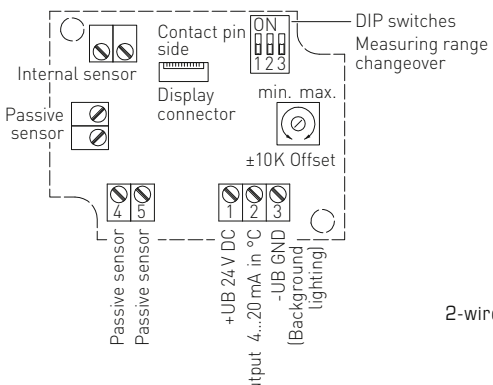

Connection*:
2-wire connection for devices with / without display (not illuminated)
3-wire connection for devices with illuminated display

Sleeve sensors with temperature measuring transducer, calibratable, with multi-range switching and active output

Dimensional drawing **HFTM**

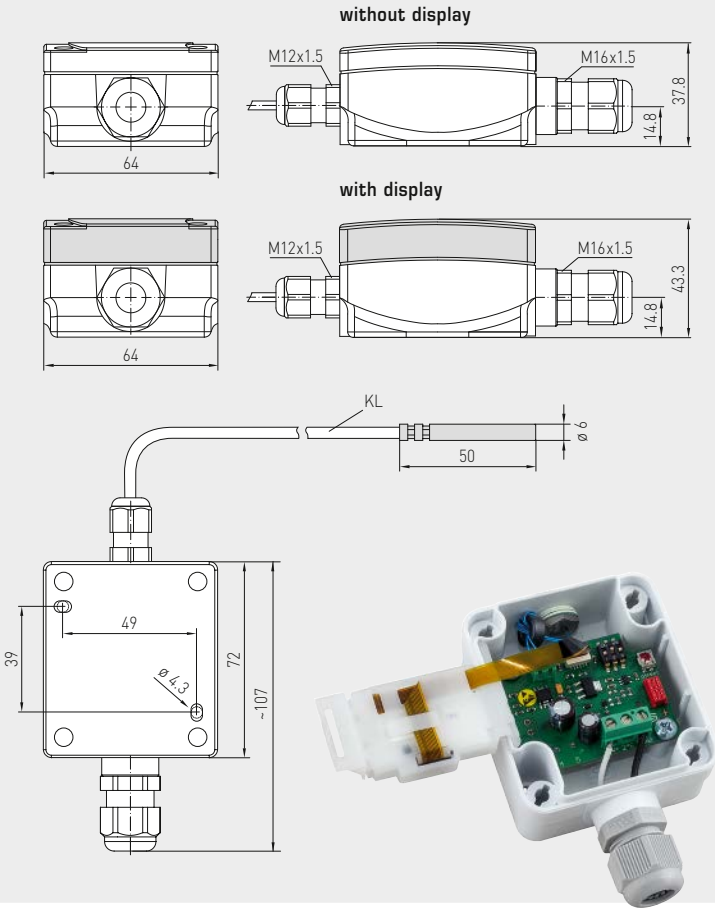

HFTM
with display





IP65 (standard)
humidity-tight **stamped**



IP68 (optional)
watertight compound-filled, **rolled**



IP54 (optional)
with **glass fibre** cable

Measuring ranges (adjustable)	DIP 1	DIP 2	DIP 3
–20…+150 °C	**ON**	**ON**	**ON**
–50… +50 °C	OFF	**ON**	**ON**
–20… +80 °C	**ON**	OFF	**ON**
–30… +60 °C	OFF	OFF	**ON**
0… +40 °C	**ON**	**ON**	OFF
0… +50 °C (default)	OFF	**ON**	OFF
0…+100 °C	**ON**	OFF	OFF
0…+150 °C	OFF	OFF	OFF



Dependency of output voltage on output current

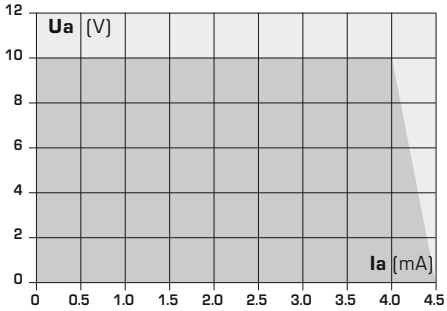

THERMASGARD® HFTM Sleeve sensors with temperature measuring transducer

Type / WG01	Sensor	Output	Type	Display	Item No.
HFTM-I					**IP65, I-variant**
HFTM-I	Pt1000	4…20 mA	Remote sensor		1101-1152-0219-920
HFTM-I DISPLAY	Pt1000	4…20 mA	Remote sensor	■	1101-1152-2219-920
HFTM-U					**IP65, U-variant**
HFTM-U	Pt1000	0-10 V	Remote sensor		1101-1151-0219-920
HFTM-U DISPLAY	Pt1000	0-10 V	Remote sensor	■	1101-1151-2219-920
Extra charge:	Other ranges optional				
	Protection type **IP68** (Sensor sleeve watertight compound-filled)				
	2-wire connecting leads, per running meter (**silicone / PTFE / glass fibre**)				on request
	Other lengths of protection sleeve (NL) optional				on request

Accessories	
THE-xx	**Immersion sleeve**, stainless steel **V4A** (1.4571) or nickel-plated brass, Ø = 9 mm For further information, see last chapter Accessories!

THERMASGARD® ALTM 1

Surface contact / tube contact temperature measuring transducers, including strap, compact variant, calibratable, with multi-range switching and active output

S+S REGELTECHNIK

Calibratable tube contact temperature measuring transducers **THERM**ASGARD® **ALTM 1** with eight switchable measuring ranges, internal or remote sensor, continuous output, strap and terminal box enclosure made of impact-resistant plastic, enclosure cover with quick-locking screws, with or without optional display. This surface contact sensor is used for temperature detection on piping and tubes (e.g. cold-water and hot-water), or on heating sections for heating system control. The tube sensors are factory-calibrated. Adjustment / fine adjustment by the user is possible (range and zero point are adjustable).

ALTM 1
(compact)



TECHNICAL DATA

Power supply:	24 V AC / DC (± 10 %) for U variant 15...36 V DC for I variant, depending on working resistance, residual ripple stabilised ± 0.3 V
Working resistance:	R_a (ohm) = (U_b -14 V) / 0.02 A for I variant
Load resistance:	R_L > 5 kOhm for U variant
Power consumption:	< 1.0 VA / 24 V DC; < 2.2 VA / 24 V AC
Sensor:	Pt1000, DIN EN 60751, class B (**Perfect Sensor Protection**)
Measuring ranges:	**multi-range switching with 8 switchable measuring ranges,** see table (other ranges optional) compact variant: **T_{max} up to +100 °C,** operating range –50...+100 °C **with manual zero point correction (± 10 K)**
Deviation, temperature:	typically ± 0.2 K at +25 °C
Output:	0 - 10 V or 4...20 mA
Ambient temperature:	measuring transducer –30...+70 °C
Connection type:	2- or 3-wire connection
Process connection:	endless metal strap and metal tightener (included in the scope of delivery)
Strap dimensions:	Ø = 13 - 92 mm (¼ - 3"), length L = 300 mm
Enclosure:	plastic, UV-stabilised, material polyamide, 30 % glass-globe reinforced, with quick-locking screws (slotted / Phillips head combination), colour traffic white (similar to RAL 9016), enclosure cover for display is transparent!
Enclosure dimensions:	72 x 64 x 37.8 mm (Tyr 1 without display) 72 x 64 x 43.3 mm (Tyr 1 with display)
Cable gland:	M 16 x 1.5, including strain relief, exchangeable, max. inner diameter 10,4 mm
Electrical connection:	0.14 - 1.5 mm² via terminal screws
Insulating resistance:	≥ 100 MΩ, at +20 °C (500 V DC)
Humidity:	< 95 % r. H., non-precipitating air
Protection class:	III (according to EN 60 730)
Protection type:	IP 65 (according to EN 60 529)
Standards:	CE conformity, electromagnetic compatibility according to EN 61326, according to EMC directive 2014 / 30 / EU
Optional:	Two-line **display with illumination,** cutout approx. 36 x 15 mm (W x H), for displaying the **ACTUAL temperature** and the **internal diagnostics** (measuring range exceeded, measuring range not reached, sensor breakage, sensor short circuit)

Display and internal diagnostics
THERMASGARD®
Measuring transducer with display



3-wire connection **ALTM 1 - U**

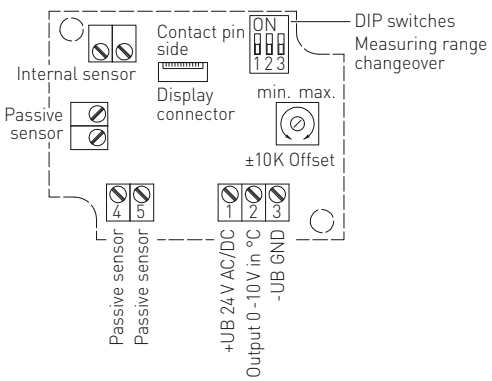

2- or 3-wire connection* **ALTM 1 - I**

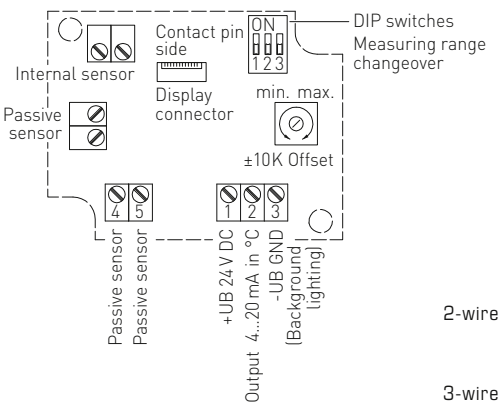

Connection*:
2-wire connection for devices with / without display (not illuminated)
3-wire connection for devices with illuminated display

Surface contact / tube contact temperature measuring transducers, including strap, compact variant, calibratable, with multi-range switching and active output

Dimensional drawing **ALTM 1**

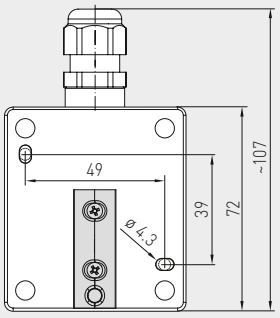



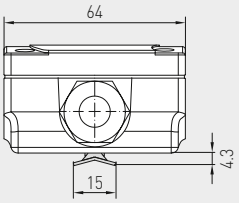

without display

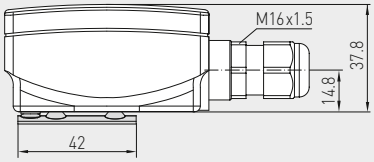

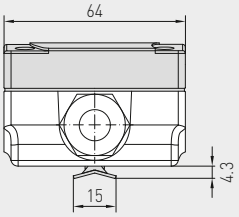

with display

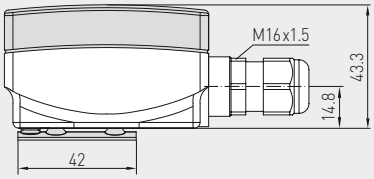

ALTM 1
with display
(compact)



High-performance encapsulation against vibration, mechanical stress and humidity

PS-PROTECTION
PERFECT SENSOR PROTECTION

Measuring ranges (adjustable)	DIP 1	DIP 2	DIP 3
–20…+150 °C	**ON**	**ON**	**ON**
–50… +50 °C	OFF	**ON**	**ON**
–20… +80 °C	**ON**	OFF	**ON**
–30… +60 °C	OFF	OFF	**ON**
0… +40 °C	**ON**	**ON**	OFF
0… +50 °C (default)	OFF	**ON**	OFF
0…+100 °C	**ON**	OFF	OFF
0…+150 °C	OFF	OFF	OFF

Dependency of output voltage on output current

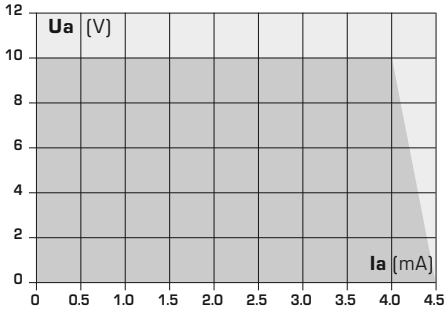

THERMASGARD® ALTM 1 Surface contact / tube contact temperature measuring transducers (compact)

Type / WG01	Sensor	Output	Type	Display	Item No.
ALTM 1-I					**IP65, I-variant**
ALTM1-I	Pt1000	4…20 mA	Compact		1101-1112-0219-920
ALTM1-I DISPLAY	Pt1000	4…20 mA	Compact	■	1101-1112-2219-920
ALTM 1-U					**IP65, U-variant**
ALTM1-U	Pt1000	0-10 V	Compact		1101-1111-0219-920
ALTM1-U DISPLAY	Pt1000	0-10 V	Compact	■	1101-1111-2219-920
Extra charge:	Other ranges optional				

Accessories		
WLP-1	Heat-conductive paste, silicone-free	7100-0060-1000-000

THERMASGARD® ALTM 2

Surface contact / tube contact temperature measuring transducers, including strap, with detached sensor head, calibratable, with multi-range switching and active output

S+S REGELTECHNIK

Calibratable tube contact temperature measuring transducers **THERM**ASGARD® **ALTM 2** with eight switchable measuring ranges, internal or remote sensor, continuous output, strap and terminal box enclosure made of impact-resistant plastic, enclosure cover with quick-locking screws, with or without optional display. This surface contact sensor is used for temperature detection on piping and tubes (e.g. cold water and hot-water), or on heating sections for heating system control. The tube sensors are factory-calibrated. Adjustment / fine adjustment by the user is possible (range and zero point are adjustable).

ALTM 2
(with remote sensor)



TECHNICAL DATA

Power supply:	24 V AC / DC (± 10 %) for U variant 15...36 V DC for I variant, depending on working resistance, residual ripple stabilised ± 0.3 V
Working resistance:	R_a (ohm) = (U_b -14 V) / 0.02 A for I variant
Load resistance:	R_L > 5 kOhm for U variant
Power consumption:	< 1.0 VA / 24 V DC; < 2.2 VA / 24 V AC
Sensor:	Pt1000, DIN EN 60751, class B (**Perfect Sensor Protection** with IP68)
Measuring ranges:	**multi-range switching with 8 switchable measuring ranges,** see table (other ranges optional) **T_{max} over +100 °C,** operating range –50...+150 °C; **with manual zero point correction (± 10 K)**
Deviation, temperature:	typically ± 0.2 K at +25 °C
Output:	0 - 10 V or 4...20 mA
Ambient temperature:	measuring transducer –30...+70 °C
Connection type:	2- or 3-wire connection
Process connection:	endless metal strap and metal tightener (included in the scope of delivery)
Strap dimensions:	Ø = 13 - 92 mm (¼ - 3"), length L = 300 mm
Enclosure:	plastic, UV-stabilised, material polyamide, 30 % glass-globe reinforced, with quick-locking screws (slotted / Phillips head combination), colour traffic white (similar to RAL 9016), enclosure cover for display is transparent!
Enclosure dimensions:	72 x 64 x 37.8 mm (Tyr 1 without display) 72 x 64 x 43.3 mm (Tyr 1 with display)
Cable gland:	M 16 x 1.5, including strain relief, exchangeable, max. inner diameter 10,4 mm
Connection cable:	silicone, SiHF, 2 x 0.25 mm², KL = 1.5 m (other lengths and range limits optional, e.g. PTFE leads up to +250 °C or glass fibre with steel wire mesh up to +350°C)
Electrical connection:	0.14 - 1.5 mm² via terminal screws
Insulating resistance:	≥ 100 MΩ, at +20 °C (500 V DC)
Humidity:	< 95 % r. H., non-precipitating air
Protection class:	III (according to EN 60 730)
Protection type:	**IP 65** (according to EN 60 529) humidity-tight stamped **IP 68** (optional sensor sleeve watertight compound-filled*)
Standards:	CE conformity, electromagnetic compatibility according to EN 61326, according to EMC directive 2014 / 30 / EU
Optional:	Two-line **display with illumination,** cutout approx. 36 x 15 mm (W x H), for displaying the **ACTUAL temperature** and the **internal diagnostics** (measuring range exceeded, measuring range not reached, sensor breakage, sensor short circuit)

Display and internal diagnostics
THERMASGARD®
Measuring transducer with display

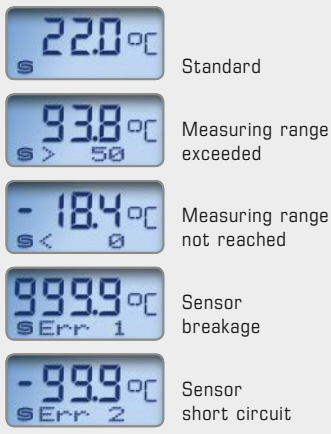

3-wire connection **ALTM 2 - U**

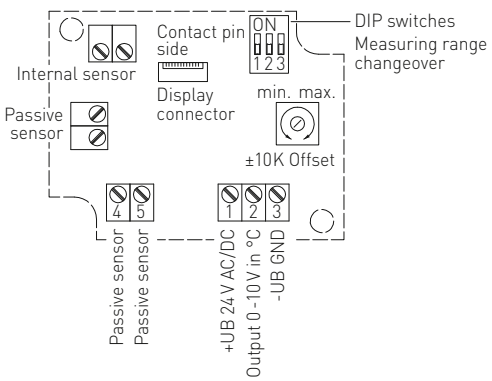

2- or 3-wire connection* **ALTM 2 - I**

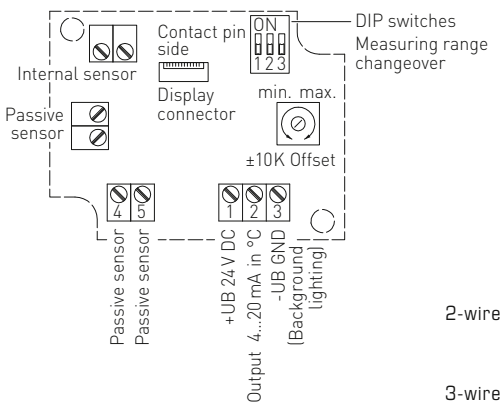

Connection*:
2-wire connection for devices with / without display (not illuminated)
3-wire connection for devices with illuminated display

Surface contact / tube contact temperature measuring transducers, including strap, with detached sensor head, calibratable, with multi-range switching and active output

Dimensional drawing **ALTM 2**

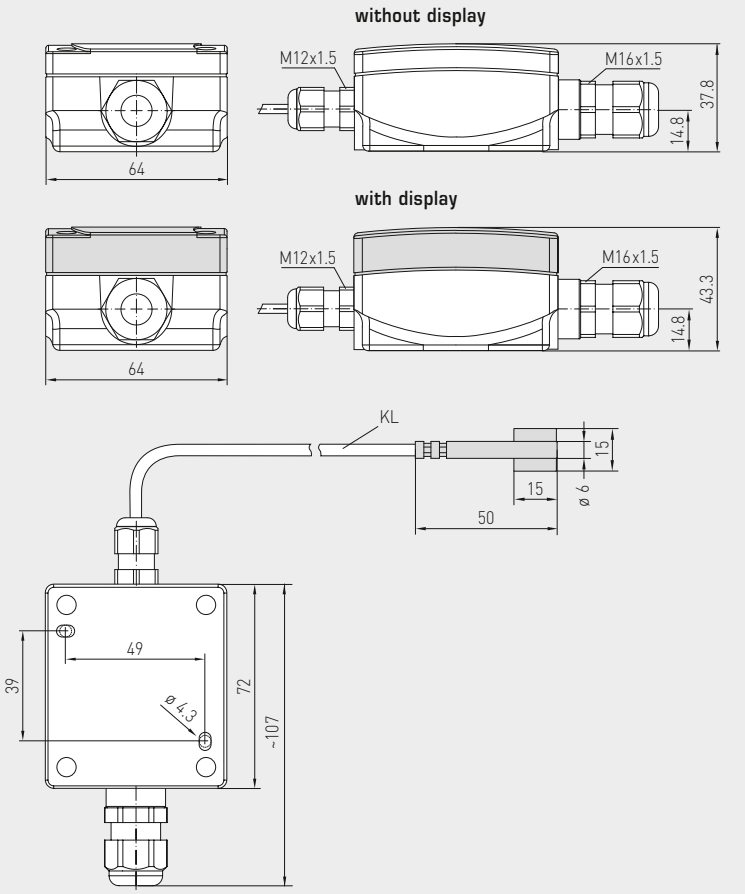

ALTM 2
with display
(with remote sensor)



* High-performance encapsulation against vibration, mechanical stress and humidity

PS-PROTECTION
PERFECT SENSOR PROTECTION

Measuring ranges (adjustable)	DIP 1	DIP 2	DIP 3
–20…+150 °C	**ON**	**ON**	**ON**
–50… +50 °C	OFF	**ON**	**ON**
–20… +80 °C	**ON**	OFF	**ON**
–30… +60 °C	OFF	OFF	**ON**
0… +40 °C	**ON**	**ON**	OFF
0… +50 °C (default)	OFF	**ON**	OFF
0…+100 °C	**ON**	OFF	OFF
0…+150 °C	OFF	OFF	OFF

Dependency of output voltage on output current

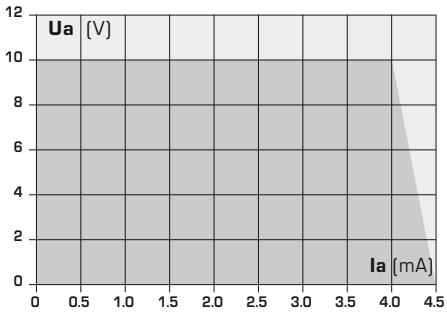

THERMASGARD® ALTM 2 Surface contact / tube contact temperature measuring transducers

Type / WG01	Sensor	Output	Type	Display	Item No.
ALTM 2-I					**IP 65, I-variant**
ALTM2-I	Pt1000	4…20 mA	Remote sensor		1101-1122-0219-920
ALTM2-I DISPLAY	Pt1000	4…20 mA	Remote sensor	■	1101-1122-2219-920
ALTM 2-U					**IP 65, U-variant**
ALTM2-U	Pt1000	0-10 V	Remote sensor		1101-1121-0219-920
ALTM2-U DISPLAY	Pt1000	0-10 V	Remote sensor	■	1101-1121-2219-920
Extra charge:	other ranges optional Protection type **IP 68** (Sensor sleeve watertight compound-filled) 2-wire connecting leads, per running meter **(PVC / silicone)**				on request

Accessories		
WLP-1	Heat-conductive paste, silicone-free	7100-0060-1000-000

THERMASGARD® RPTM 1

Pendulum room temperature measuring transducers, calibratable, with multi-range switching and active output

S+S REGELTECHNIK

Calibratable resistance thermometer **THERM**ASGARD® **RPTM 1** with eight switchable measuring ranges, continuous output, terminal box enclosure made of impact-resistant plastic and enclosure cover with quick-locking screws, with or without optional display (for displaying actual temperature). This room pendulum sensor is specifically designed for temperature detection in larger rooms and halls. Due to the measuring method employed by this pendulum room temperature sensor in combination with its positioning in the room, an excellent measuring result that is representative of the room is achieved as ambient air of the room is circulating evenly around the sensor. These temperature transmitters are factory-calibrated. Adjustment / fine adjustment by the user is possible (zero point offset is adjustable).

RPTM 1



TECHNICAL DATA

Power supply:	24 V AC / DC (± 10 %) for U variant 15...36 V DC for I variant, depending on working resistance, residual ripple stabilised ± 0.3 V
Working resistance:	R_a (ohm) = (U_b -14 V) / 0.02 A for I variant
Load resistance:	R_L > 5 kOhm for U variant
Power consumption:	< 1.0 VA / 24 V DC; < 2.2 VA / 24 V AC
Sensor:	Pt1000, DIN EN 60751, class B
Sensor protection:	**plastic** sinter filter, Ø 16 mm, L = 35 mm, exchangeable (optional **metal** sinter filter, Ø 16 mm, L = 32 mm)
Measuring ranges:	**multi-range switching with 8 switchable measuring ranges** see table (other ranges optional) **T_{min} –5 °C, T_{max} +60 °C, with manual zero point correction (± 10 K)**
Deviation, temperature:	typically ± 0.2 K at +25 °C
Output:	0 - 10 V or 4...20 mA
Ambient temperature:	measuring transducer –5...+60 °C
Connection type:	2- or 3-wire connection
Enclosure:	plastic, UV-stabilised, material polyamide, 30 % glass-globe reinforced, with quick-locking screws (slotted / Phillips head combination), colour traffic white (similar to RAL 9016), enclosure cover for display is transparent!
Enclosure dimensions:	72 x 64 x 37.8 mm (Tyr 1 without display) 72 x 64 x 43.3 mm (Tyr 1 with display)
Cable gland:	M 16 x 1.5, including strain relief, exchangeable, max. inner diameter 10.4 mm
Connection cable:	PVC, H03VV-F, 2 x 0.5 mm², KL = approx. 1.5 m (other lengths optional)
Protective tube:	**stainless steel V2A** (1.4301), Ø =16 mm, NL = 142 mm
Electrical connection:	0.14 -1.5 mm², via terminal screws
Humidity:	< 95 % r. H., non-precipitating air
Protection class:	III (according to EN 60 730)
Protection type:	**IP 65** (according to EN 60 529)
Standards:	CE conformity, electromagnetic compatibility according to EN 61326, according to EMC directive 2014 / 30 / EU
Optional:	Two-line **display with illumination,** cutout approx. 36 x 15 mm (W x H), for displaying the **ACTUAL temperature** and the **internal diagnostics** (measuring range exceeded, measuring range not reached, sensor breakage, sensor short circuit)

Display and internal diagnostics
THERMASGARD®
Measuring transducer with display



Standard

Measuring range exceeded

Measuring range not reached

Sensor breakage

Sensor short circuit

3-wire connection **RPTM 1 - U**

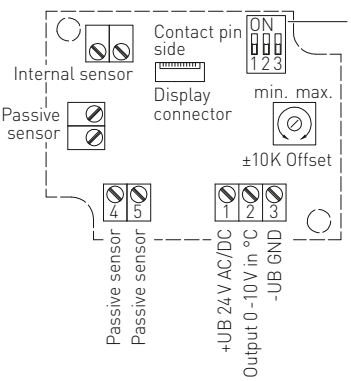

2- or 3-wire connection* **RPTM 1 - I**

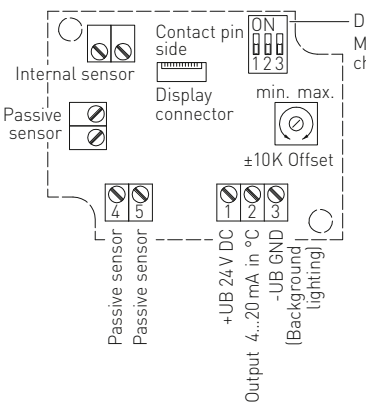

Connection*:

2-wire connection for devices with / without display (not illuminated)

3-wire connection for devices with illuminated display

Pendulum room temperature measuring transducers, calibratable, with multi-range switching and active output

Dimensional drawing **RPTM 1**

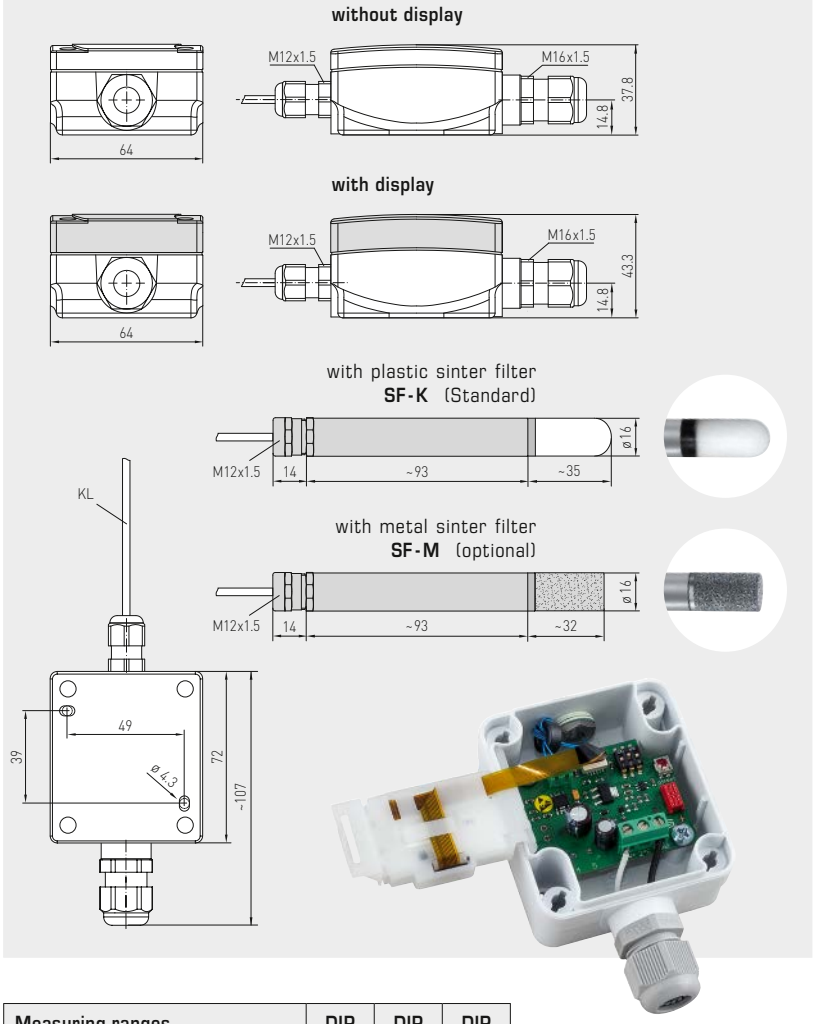

RPTM 1
with display



Measuring ranges (adjustable)	DIP 1	DIP 2	DIP 3
–20…+150 °C	**ON**	**ON**	**ON**
–50… +50 °C	OFF	**ON**	**ON**
–20… +80 °C	**ON**	OFF	**ON**
–30… +60 °C	OFF	OFF	**ON**
0… +40 °C	**ON**	**ON**	OFF
0… +50 °C (default)	OFF	**ON**	OFF
0…+100 °C	**ON**	OFF	OFF
0…+150 °C	OFF	OFF	OFF

(observe max. permissible temperature ranges!)



Dependency of output voltage on output current

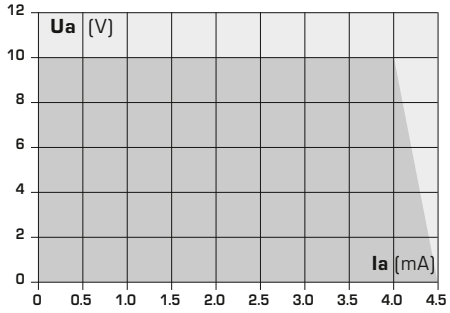

THERMASGARD® RPTM 1 Pendulum room temperature measuring transducers (with metal sleeve)

Type / WG01	Sensor	Output	Type	Item No.
RPTM 1-I				**IP65, I-variant**
RPTM1-I	Pt1000	4…20 mA	Remote sensor	1101-1162-0219-910
RPTM 1-U				**IP65, U-variant**
RPTM1-U	Pt1000	0-10 V	Remote sensor	1101-1161-0219-910
Extra charge:	Other ranges optional Two-line **display** with illumination 2-wire connecting leads, per running meter (**PVC**)			on request

Accessories		
SF-M	**Metal** sinter filter, Ø 16 mm, L = 32 mm, exchangeable, stainless steel **V4A** (1.4404)	7000-0050-2200-100

THERMASGARD® RPTM 2

Pendulum room temperature measuring transducers, calibratable, with multi-range switching and active output

S+S REGELTECHNIK

Calibratable resistance thermometer **THERM**ASGARD® **RPTM 2** with eight switchable measuring ranges, continuous output, terminal box enclosure made of impact-resistant plastic and enclosure cover with quick-locking screws, with or without optional display (for displaying actual temperature). This room pendulum sensor is specifically designed for temperature detection in larger rooms and halls, as a dark radiation sensor for example. Due to the measuring method employed by this pendulum room temperature sensor in combination with its positioning in the room, excellent and room-representative measuring results are achieved. The globe thermometer RPTM 2 determines the effective portion of active radiation or the effective radiant heat at the measured location. The globe temperature is determined to take heat radiation into consideration and to estimate thermal comfortableness (operative room temperature). The operative room temperature describes the coaction of heat radiation and heat convection (the ratio of globe temperature / air temperature is approx. 70 % / 30 %). These sensors are factory-calibrated. Adjustment / fine adjustment by the user is possible (range and zero point are adjustable).

RPTM 2



TECHNICAL DATA

Power supply:	24 V AC / DC (± 10 %) for U variant 15...36 V DC for I variant, depending on working resistance, residual ripple stabilised ± 0.3 V
Working resistance:	R_a (ohm) = (U_b -14 V) / 0.02 A for I variant
Load resistance:	R_L > 5 kOhm for U variant
Power consumption:	< 1.0 VA / 24 V DC; < 2.2 VA / 24 V AC
Sensor:	Pt1000, DIN EN 60751, class B
Measuring ranges:	**multi-range switching with 8 switchable measuring ranges** see table (other ranges optional) **T_{min} –5 °C, T_{max} +60 °C, with manual zero point correction (± 10 K)**
Deviation, temperature:	typically ± 0.2 K at +25 °C
Output:	0 - 10 V or 4...20 mA
Ambient temperature:	measuring transducer –5...+60 °C
Connection type:	2- or 3-wire connection
Enclosure:	plastic, UV-stabilised, material polyamide, 30 % glass-globe reinforced, with quick-locking screws (slotted / Phillips head combination), colour traffic white (similar to RAL 9016), enclosure cover for display is transparent!
Enclosure dimensions:	72 x 64 x 37.8 mm (Tyr 1 without display) 72 x 64 x 43.3 mm (Tyr 1 with display)
Cable gland:	M 16 x 1.5, including strain relief, exchangeable, max. inner diameter 10.4 mm
Electrical connection:	0.14 -1.5 mm², via terminal screws
Connection cable:	PVC, H03VV-F, 2 x 0.5 mm², KL = approx. 1.5 m (other lengths optional)
Globe:	plastic, colour black, Ø = 50 mm
Humidity:	< 95 % r. H., non-precipitating air
Protection class:	III (according to EN 60 730)
Protection type:	**IP 65** (according to EN 60 529)
Standards:	CE conformity, electromagnetic compatibility according to EN 61326, according to EMC directive 2014 / 30 / EU
Optional:	Two-line **display with illumination,** cutout approx. 36 x 15 mm (W x H), for displaying the **ACTUAL temperature** and the **internal diagnostics** (measuring range exceeded, measuring range not reached, sensor breakage, sensor short circuit)

Display and internal diagnostics
THERMASGARD®
Measuring transducer with display



3-wire connection **RPTM 2 - U**

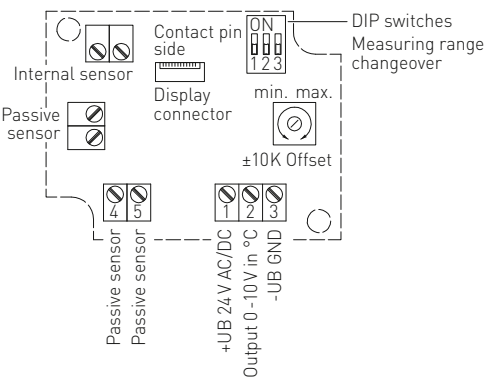

2- or 3-wire connection* **RPTM 2 - I**

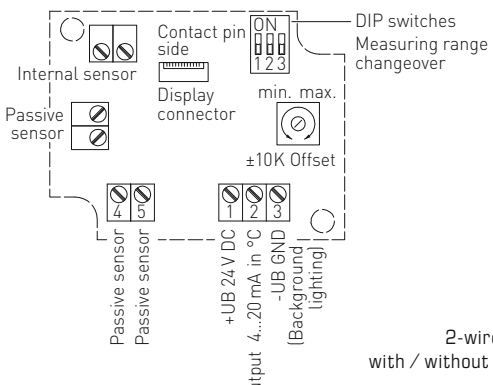

Connection*:
2-wire connection for devices with / without display (not illuminated)
3-wire connection for devices with illuminated display

Dimensional drawing **RPTM 2**

without display

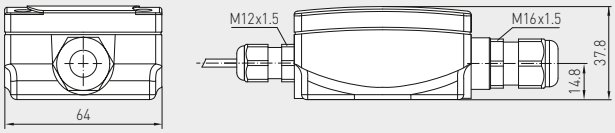

with display

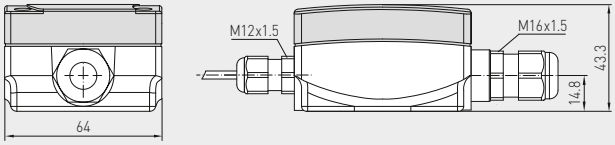

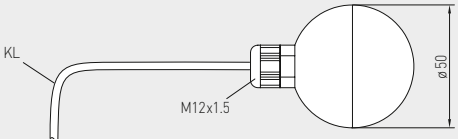

with globe

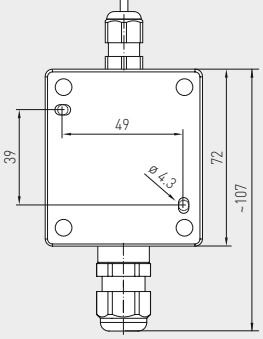



RPTM 2
with display



Measuring ranges (adjustable)	DIP 1	DIP 2	DIP 3
–20…+150 °C	**ON**	**ON**	**ON**
–50… +50 °C	OFF	**ON**	**ON**
–20… +80 °C	**ON**	OFF	**ON**
–30… +60 °C	OFF	OFF	**ON**
0… +40 °C	**ON**	**ON**	OFF
0… +50 °C (default)	OFF	**ON**	OFF
0…+100 °C	**ON**	OFF	OFF
0…+150 °C	OFF	OFF	OFF

(observe max. permissible temperature ranges!)



Dependency of output voltage on output current

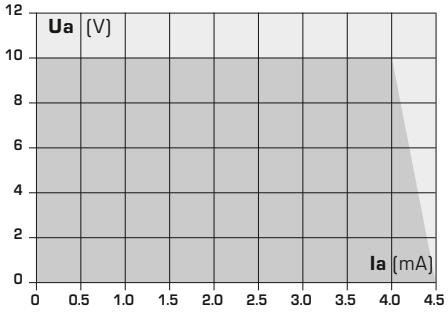

THERMASGARD® RPTM 2	Pendulum room temperature measuring transducers (with globe)			
Type / WG01	**Sensor**	**Output**	**Type**	**Item No.**
RPTM 2-I				**IP65, I-variant**
RPTM2-I	Pt1000	4…20 mA	Remote sensor	1101-1172-0219-910
RPTM 2-U				**IP65, U-variant**
RPTM2-U	Pt1000	0-10 V	Remote sensor	1101-1171-0219-910
Extra charge:	Other ranges optional Two-line **display** with illumination 2-wire connecting leads, per running meter (**PVC**)			on request

S+S REGELTECHNIK

Top hat rail measuring transducers for temperature with multi-range switching and active output

The top hat rail measuring transducer **THERM**ASGARD® **HSM** is an analogue temperature measuring transducer for Pt100 or Pt1000 sensors according to DIN 60751, with 13 switchable measuring ranges (selectable via DIP switches). It is installed inside control cabinets or distribution boxes. The top hat rail transmitter converts the sensor's temperature-dependent resistance signal into a standard signal of 0 - 10 V or 4...20 mA. The output signal is highly accurate temperature linear. The measuring transducer is factory-calibrated.

TECHNICAL DATA

Output:	**0 - 10 V**	**4...20 mA**
Power supply:	24 V AC / DC ±10 %	24 V DC
Power consumption:	< 0.2 VA / 24 V AC / DC	< 0.55 VA / 24 V DC
Input:	Pt100 / Pt1000	Pt100 / Pt1000
Testing current:	0.25 mA	0.25 mA
Zero point:	–200...+830 °C	–200...+830 °C
Range:	> +20 °C	> +20 °C
Sensor breakage:	> 10 V	> 20 mA
Short circuit:	0 V	< 4 mA
Residual ripple permissible:	< 10 %	< 10 %
Output:	0 -10 V min. load resistance 3 k Ohm	4...20 mA max. working resistance Ra (Ohm) = UB -12 V / 0.02 A
Response time:	< 0.1 s	< 0.1 s
Operating temperature:	–40...+85 °C	–40...+85 °C

Enclosure:	2TE (75 x 25 x 53 mm) material polycarbonate, colour signal green (similar to RAL 6029)
Protection class:	III (according to EN 60 730)
Protection type:	IP 20 (according to EN 60 529)
Standards:	CE conformity, electromagnetic compatibility according to EN 61 326, EMC directive 2014 / 30 / EU

Connecting diagram **HSM - U**

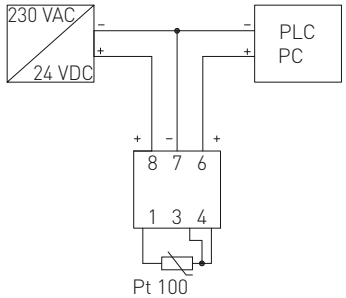

Connecting diagram **HSM - I**

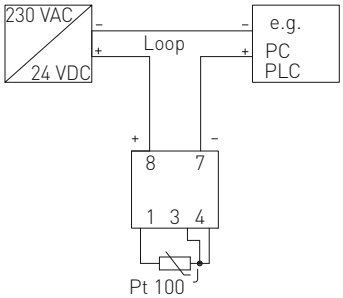

Dimensional drawing **HSM**

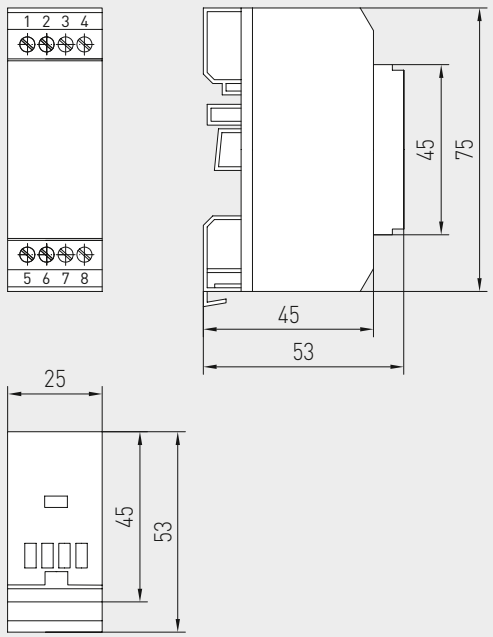

HSM



Measuring ranges (adjustable)	DIP 1	DIP 2	DIP 3	DIP 4
–20…+150 °C	**ON**	**ON**	**ON**	**ON**
0… +50 °C (default)	OFF	**ON**	**ON**	**ON**
0…+100 °C	**ON**	OFF	**ON**	**ON**
0…+200 °C	OFF	OFF	**ON**	**ON**
0…+300 °C	**ON**	**ON**	OFF	**ON**
0…+400 °C *	OFF	**ON**	OFF	**ON**
0…+500 °C *	**ON**	OFF	OFF	**ON**
0…+600 °C *	OFF	OFF	OFF	**ON**
–50… +50 °C	**ON**	**ON**	**ON**	OFF
–100…+100 °C	OFF	**ON**	**ON**	OFF
–30… +70 °C	**ON**	OFF	**ON**	OFF
–40… +60 °C	OFF	OFF	**ON**	OFF
0…+250 °C	**ON**	**ON**	OFF	OFF

*** measuring ranges only for Pt100**

THERMASREG® HSM	Top hat rail measuring transducers for temperature		
Type / WG01	**Sensor**	**Output**	**Item No.**
HSM-I			**IP20, I-variant**
HSM-I	Pt100 / Pt1000	4…20 mA	1101-6112-0009-700
HSM-U			**IP20, U-variant**
HSM-U	Pt100 / Pt1000	0-10 V	1101-6111-0009-700
Extra charge:	Other ranges optional		
For special orders please specify:	Type and measuring range (MR) e. g. HSM-U, Pt100, (MR: 0 …+ 450 °C); HSM-I, Pt100, (MR: 0 …+550 °C)		



Temperature
CONTROL DEVICES

Our **THERM**ASREG® temperature controllers and thermostats are known for their rugged, long-life and reliable measuring technology, widely field-proven in everyday use. Well engineered and manufactured in customized versions, these devices have a perfect fit in high-end installations.

APPLICATION RANGE

> Office and administration buildings
> Schools, hotels and public authorities
> Power plants and district heating facilities
> Industrial buildings and production plants
> Food industry
> Heating and ventilation systems



THERMASREG®

210 – 251

Room temperature controllers

RTR-B	Room temperature controller	**213**
RTR-S	Room temperature controller, fain coil controller	**215**
RTR-E-UP	Room temperature controller, clock thermostat	**219**
TET	Top hat rail measuring transducer	**251**

Surface-contact thermostats

ALTR 060	Surface-contact thermostat	**236**
ALTR 090	Surface-contact thermostat	**236**
ALTR 1	Surface-contact thermostat	**237**
ALTR 3	Surface-contact thermostat	**237**
ALTR 5	Surface-contact thermostat	**237**
ALTR 7	Surface-contact thermostat	**237**

Equipment thermostats, duct thermostats

ETR	Equipment temperature controller	**227**
KTR	Duct temperature controller	**233**
TRxx-F	Temperature controller with remote sensor	**223**
FST-K	Duct frost protection thermostat	**245**

Wet room thermostats

TR 040	Temperature controller	**220**
TR 060	Temperature controller	**220**
TR 022	Temperature controller	**221**
TR 04040	Temperature controller, two-step	**222**

Frost protection thermostats

FST	Frost protection thermostat	**241**
FST-K	Duct frost protection thermostat	**245**
FS	2-phase frost protection thermostat	**249**

Room temperature controllers, mechanical, on-wall

S+S REGELTECHNIK

One-step mechanical single room controller **THERM**ASREG® **RTR - B** in bi-metal technology with thermal feedback for monitoring or controlling temperatures in dry rooms, or for activating any kind of heating system as room thermostat. For currentless open radiator valves, the cooling output from the changeover contact (normally open contact) must be connected. At breaker contacts, a maximum of 10 valve actuators can be connected and at normally open contacts a maximum of 5 valve actuators.

TECHNICAL DATA

Switching capacity: (Contact load)	230 V AC, 50 - 60 Hz heating: 10 mA...10 (4) A, DC 30 W cooling: 10 mA...5 (2) A
Sensor element:	bi-metal
Control range:	+5...+30 °C
Output:	breaker or changeover contact
Operating difference:	approx. 0.5 K
Enclosure:	plastic, material ABS, colour pure white (similar to RAL 9010)
Dimensions:	75 x 75 x 25 mm (E1)
Electrical connection:	0.14 - 2.5 mm^2 via terminal screws
Installation:	wall mounting or on in-wall flush box Ø 55 mm, base with 4-hole for mounting on vertically or horizontally installed in-wall flush boxes for cable entry from the back, with predetermined breaking point for on-wall cable entry from top / bottom in case of plain on-wall installation
Protection class:	II (according to EN 60 730)
Protection type:	IP 30 (according to EN 60 529)
Standards:	CE conformity, EMC directive 2014 / 30 / EU, low-voltage directive 2014 / 35 / EU

Connecting diagram **RTR - B 121**

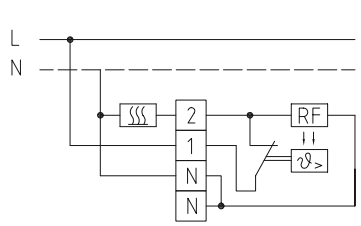

Connecting diagram **RTR - B 721**

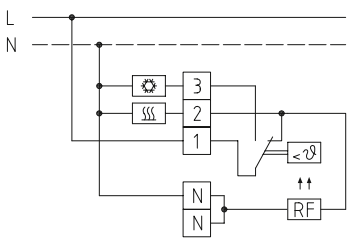

Connecting diagram **RTR - B 124**

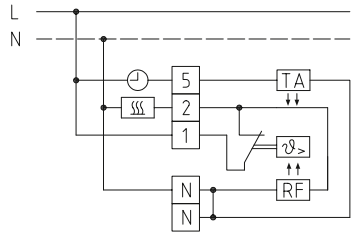

Connecting diagram **RTR - B 747**

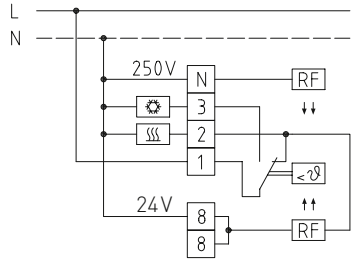

Dimensional drawing

Enclosure **E 1**
(Picture similar)

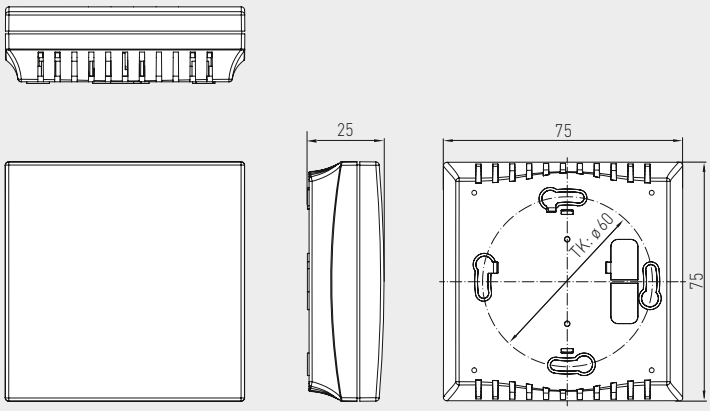

RTR-B 747
with internal setting



Dimensional drawing

Enclosure **E 1**
with one potentiometer
(Picture similar)

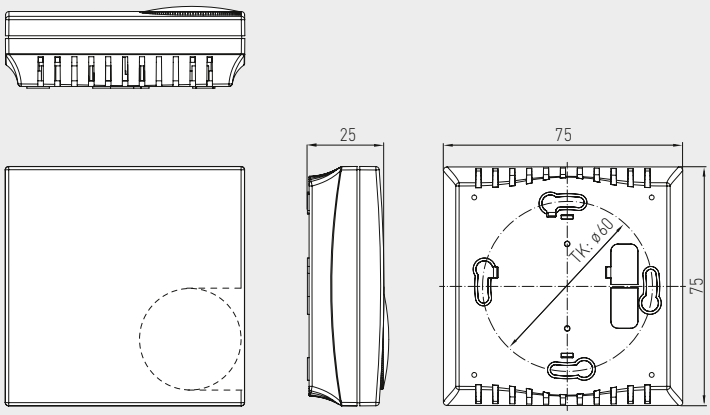

RTR-B 121
RTR-B 124
RTR-B 721
with external setting



THERMASREG® RTR - B Room temperature controllers

Type / WG01	Temperature Range	Function	Output	Item No.
RTR-B 121 / B 124 / B 721				**External setting**
RTR-B 121	+5...+30 °C	Heating	Breaker	1102-4011-2100-000
RTR-B 124	+5...+30 °C	Heating, temperature reduction - 5 K	Breaker	1102-4011-2400-000
RTR-B 721	+5...+30 °C	Heating, cooling	Changeover contact	1102-4017-2100-000
RTR-B 747				**Internal setting**
RTR-B 747	+5...+30 °C	Heating, cooling	Changeover contact	1102-4017-4700-000

S+S REGELTECHNIK

Room temperature controllers, continuous, on-wall, general

Electronic room temperature controllers, climate controllers **THERM**ASREG® **RTR - S** for monitoring or controlling temperatures with output 0 - 10 V for heating and cooling, optional as continuous climate controller with manual ventilator speed regulation, setpoint adjustment, and LED status indicators. Application in dry individual rooms heated or cooled by radiators, cooling ceilings, or ventilation, or air conditioning systems, or as remote control unit for air conditioners, e.g. in hotels, offices, or hospitals or as room thermostat.

TECHNICAL DATA

Power supply:	24 V AC / DC (± 10 %)
Temperature sensor:	internal or external (selectable via jumper) Pt 1000 according to DIN EN 60751, class B
Control range:	+5....+30 °C, adjustable via setpoint potentiometer with numerical scale or +21 °C (± 8 K), adjustable via setpoint potentiometer with swelling arrow (central position / + / –)
Output:	**1 x heating, 1 x cooling,** 0 - 10 V or 10 - 0 V repluggable, max. 5 mA
Proportional band:	internally adjustable via potentiometer **heating** +0.5...+3 K (1 K factory setting) **cooling** +0.5...+3 K (2 K factory setting)
Neutral zone:	internally adjustable via potentiometer, +1...+5 K (1K factory setting)
Control mode:	PI
Enclosure:	plastic, material ABS, colour pure white (similar to RAL 9010)
Dimensions:	98 x 98 x 33 mm (Baldur 2)
Installation:	wall mounting or on in-wall flush box Ø 55 mm, base with 4-hole for mounting on vertically or horizontally installed in-wall flush boxes for cable entry from the back, with predetermined breaking point for on-wall cable entry from top /bottom in case of plain on-wall installation
Electrical connection:	0.14 - 2.5 mm² via terminal screws
Humidity:	max. 90 % r. H., non-precipitating air
Protection class:	III (according to EN 60 730)
Protection type:	IP 30 (according to EN 60 529)
Standards:	CE conformity, electromagnetic compatibility according to EN 61 326, EMC directive 2014 / 30 / EU

Dimensional drawing

Enclosure **Baldur 2**
(one or two potentiometers possible)

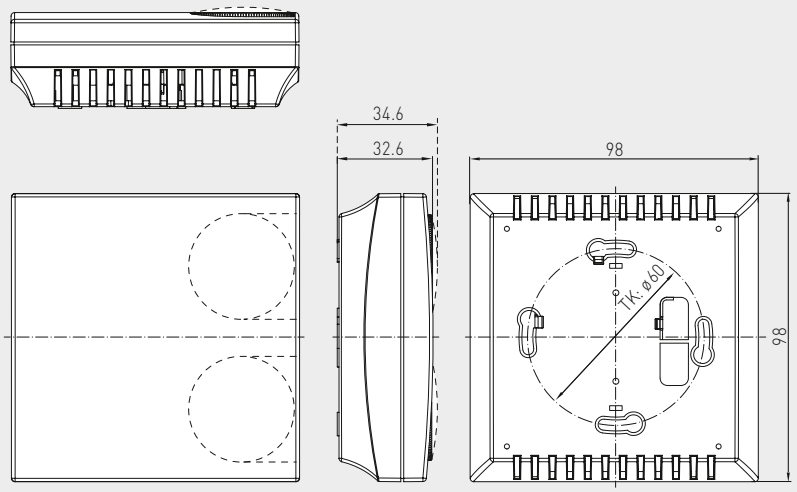



RTR-S 010
(Baldur 2)

Continuous room temperature controller for 2-channel single room control

Connecting diagram **RTR-S 010**

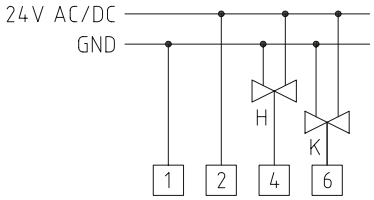

THERMASREG® RTR-S 010 Room temperature controller

Type / WG01	Sensor internal / external	Output Heating	Output Cooling	Item No.
RTR-S 010				External setting
RTR-S 010	Pt1000	0 - 10 V	0 - 10 V	1102-40B0-1000-000
Features:	+5...+30 °C, via setpoint device, numerical scale			



RTR-S 011
(Baldur 2)

Continuous room temperature controller for 2-channel single room control

Connecting diagram **RTR-S 011**

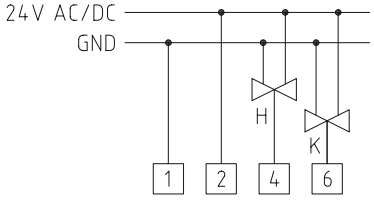

THERMASREG® RTR-S 011 Room temperature controller

Type / WG01	Sensor internal / external	Output Heating	Output Cooling	Item No.
RTR-S 011				External setting
RTR-S 011	Pt1000	0 - 10 V	0 - 10 V	1102-40B0-1100-000
Features:	+21 °C (±8 K), via setpoint device, swelling arrow (central position /+/–)			

Room temperature controllers, continuous, on-wall, different versions

S+S REGELTECHNIK



RTR-S012
(Baldur 2)

Continuous room temperature controller for 2-channel single room control, with LED operating mode indicator

Connecting diagram **RTR-S012**

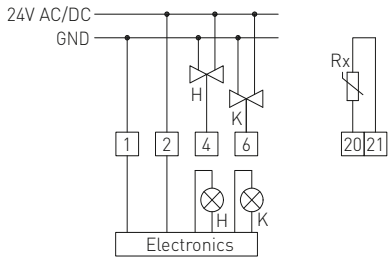

THERMASREG® RTR-S012 Room temperature controller

Type / WG01	Sensor internal / external	Output Heating	Output Cooling	Item No.
RTR-S012				**External setting**
RTR-S 012	Pt1000	0 - 10 V	0 - 10 V	1102-40B0-1200-000
Features:	+5...+30 °C, via setpoint device, numerical scale, LED red: operating mode heating, LED blue: operating mode cooling			



RTR-S013
(Baldur 2)

Continuous room temperature controller for 2-channel single room control, with LED operating mode indicator

Connecting diagram **RTR-S013**

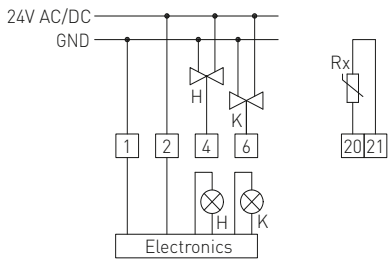

THERMASREG® RTR-S013 Room temperature controller

Type / WG01	Sensor internal / external	Output Heating	Output Cooling	Item No.
RTR-S013				**External setting**
RTR-S 013	Pt1000	0 - 10 V	0 - 10 V	1102-40B0-1300-000
Features:	+21 °C (± 8 K) via setpoint device, swelling arrow (central position / + / –), LED red: operating mode heating, LED blue: operating mode cooling			



RTR-S 014
(Baldur 2)

Continuous room temperature controller for 2-channel single room control with LED operating mode indicator and 3-speed selector switch for ventilators

Connecting diagram **RTR-S 014**

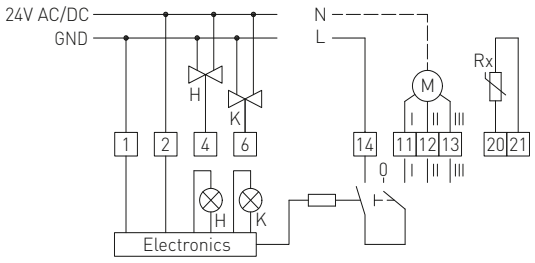

THERMASREG® RTR-S 014 Room temperature controller

Type / WG01	Sensor internal / external	Output Heating	Output Cooling	Item No.
RTR-S 014				**External setting**
RTR-S 014	Pt1000	0 - 10 V	0 - 10 V	1102-40B0-1400-000
Features:	+5...+30 °C, via setpoint device, numerical scale, internal / external sensor selectable LED red: operating mode heating, LED blue: operating mode cooling, 4-step turn switch for ventilator speed (0 / I / II / III)			



RTR-S 015
(Baldur 2)

Continuous room temperature controller for 2-channel single room control with LED operating mode indicator and 3-speed selector switch for ventilators

Connecting diagram **RTR-S 015**

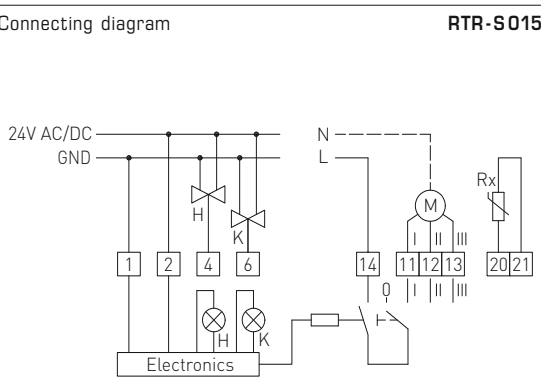

THERMASREG® RTR-S 015 Room temperature controller

Type / WG01	Sensor internal / external	Output Heating	Output Cooling	Item No.
RTR-S 015				**External setting**
RTR-S 015	Pt1000	0 - 10 V	0 - 10 V	1102-40B0-1500-000
Features:	+21 °C (±8 K) via setpoint device, swelling arrow (central position / + / –), LED red: operating mode heating, LED blue: operating mode cooling, 4-step turn switch for ventilator speed (0 / I / II / III)			

**Room temperature controllers,
in-wall, general**

S+S REGELTECHNIK

Electronic single-room controllers / clock thermostats with week program **THERM**ASREG® **RTR-E-UP** with internal sensor or 4-meter remote sensor for in-wall installation suitable for temperature monitoring and control, for activating any kind of heating system and valves (closed when currentless), as room temperature controller, room thermostat, floor temperature controller, or clock controller, e. g. for electric floor direct heating systems, for bathrooms, for night storage, wall, ceiling and gas heating systems.

TECHNICAL DATA

Power supply:	230 V AC, 50 Hz
Temperature sensor:	NTC according to DIN 44574, sensor extension up to max. 50 m, with double insulation according to EN 60730-2-1
Control range:	see table +15...+30 °C for room temperature controllers +10...+60 °C for floor temperature controllers +15...+30 °C and +20...+60 °C for combined controllers
Output:	1x normally open contact (single ended)
Switching capacity:	3.6 kW
Switching current: (Contact load)	16 A (ohmic load)
Safety:	with sensor breakage and sensor short circuit protection (in case of sensor breakage or sensor short circuit heating is switched of)
Operating difference:	approx. 0.6 K
Enclosure:	plastic, colour pure white (similar RAL 9010)
Dimensions:	80 x 80 x 16 mm
Electrical connection:	0.14 - 2.5 mm² via terminal screws
Temperature range limitation:	in the turning knob
Installation:	in in-wall flush box Ø = 55 mm
Protection class:	II (according to EN 60 730)
Protection type:	IP 30 (according to EN 60 529)
Standards:	CE conformity, electromagnetic compatibility according to EN 61 326, EMC directive 2014 / 30 / EU, low-voltage directive 2014 / 35 / EU

Dimensional drawing **RTR-E-UP**

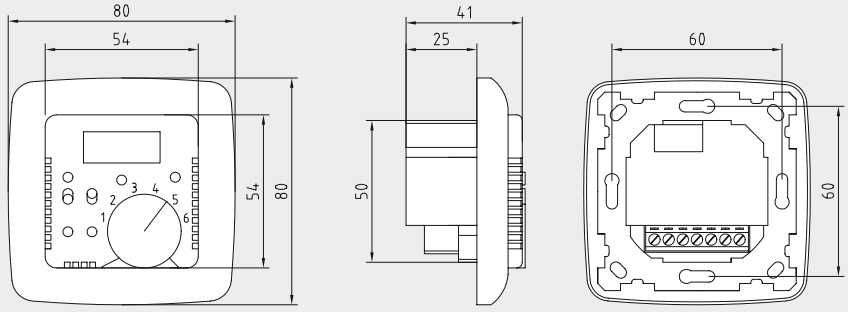

Installation scheme **RTR-E-UP**

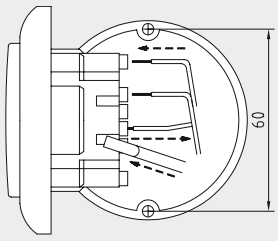



RTR-E 6005
RTR-E 6009
RTR-E 6011

Room temperature controller
for single room control
with LED operating mode indicator

Connecting diagram **RTR-E 6005 / 6009 / 6011**

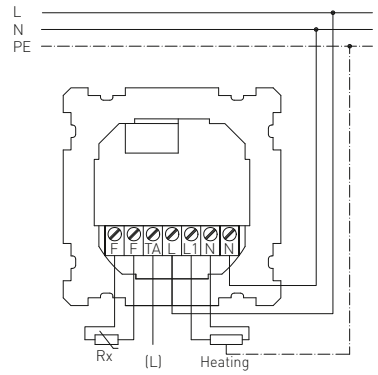

THERMASREG® RTR-E 6005 / 6009 / 6011 Room temperature controllers

Type / WG01	Temperature Range	Sensor	Function Heating	Item No.
RTR-E 6005 / 6009 / 6011				**IP 30**
RTR-E 6005	+5...+30 °C	Room sensor, Sensor Internal	Room temperature controller	1102-5010-0050-000
RTR-E 6009	+10...+60 °C	with remote sensor (L = 4 m)	Floor temperature controller	1102-5010-0090-000
RTR-E 6011	+5...+30 °C / +20...+60 °C	Room sensor, Sensor Internal, with remote sensor (L = 4 m)	Room temperature controller and floor temperature monitor (combined controller)	1102-5010-0110-000
Features:	with night temperature setback, main switch, and LED operating mode indicator			



RTR-E 6020
RTR-E 6025

Room temperature controller
for single room control
with LED operating mode indicator,
LC display, and clock

Connecting diagram **RTR-E 6020 / 6025**

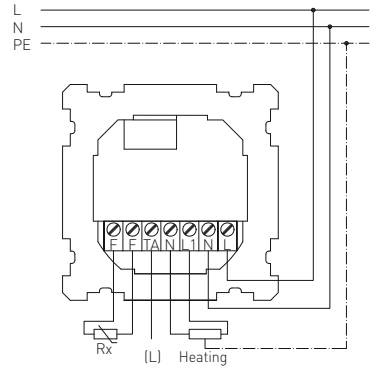

THERMASREG® RTR-E 6020 / 6025 Room temperature controllers

Type / WG01	Temperature Range	Sensor	Function Heating	Item No.
RTR-E 6005 / 6009 / 6011				**IP 30**
RTR-E 6020	+5...+30 °C	Room sensor, Sensor Internal	Room temperature controller with clock	1102-5010-0200-000
RTR-E 6025	+10...+60 °C	with remote sensor (L = 4 m)	Floor temperature controller with clock	1102-5010-0250-000
Features:	with week programme, main switch, party switch, LC display, and LED operating mode indicator			

THERMASREG® TR 040
THERMASREG® TR 060

**Temperature controllers, one-step,
with switching output**

S+S REGELTECHNIK

Mechanical temperature controllers / wet room temperature controllers **THERM**ASREG® **TR 040 / TR 060** with switching output (one-step) and stainless steel capillary (spiral coil sensor), working without external voltage. They are used for monitoring and controlling temperatures in heat generation plants, in heating, ventilation and air conditioning systems, for ventilation, cooling and climate control in halls, cold storage rooms, greenhouses, nurseries, stables, breeding rooms, as industrial room thermostat or surface-mounted thermostat in industrial applications as well as in wet room and outdoor areas.

TR 040
TR 060
(one-step)
TR



TR 040 U
TR 060 U
(one-step)
TW



TECHNICAL DATA

Switching capacity: (Contact load)	24...250 V AC +10 %, 16 A, cos φ = 1.0 24...250 V AC +10 %, 1.5 A, cos φ = 0.6 at 24 V AC min. 150 mA
Contact:	dust-proof switch block unit as potential-free, single-pole or two-pole changeover contact
Enclosure:	plastic, UV-stabilised, material polyamide, 30 % glass-globe reinforced, colour traffic white (similar to RAL 9016)
Enclosure dimensions:	108 x 70 x 73.5 mm (Thor 2)
Cable gland:	M 20 x 1.5; including strain relief
Enclosure temperature:	–35...+65 °C
Capillary:	stainless steel **V2A** (1.4303)
Tolerance:	T_{min} ± 3 K; T_{max} ± 3 K; at +20°C ± 1K
Electrical connection:	0.14 - 2.5 mm² via terminal screws
Protection class:	I (according to EN 60 730)
Protection type:	IP 65 (according to EN 60 529)
Standards:	CE conformity, EMC directive 2014 / 30 / EU, low-voltage directive 2014 / 35 / EU

FUNCTION

Heating: The preset setpoint (scale value) is equivalent to the switch-off value of the heating.
The switch-on value is lower by the amount of operating difference.
Contact 2 - 3 breaks when temperature rises to the preset value.

Cooling: The preset setpoint (scale value) is equivalent to the switch-on value of the cooling.
The switch-off value is lower by the amount of operating difference.
Contact 1 - 2 closes when temperature rises to the preset value.

Dimensional drawing **TR 040** **TR 060**

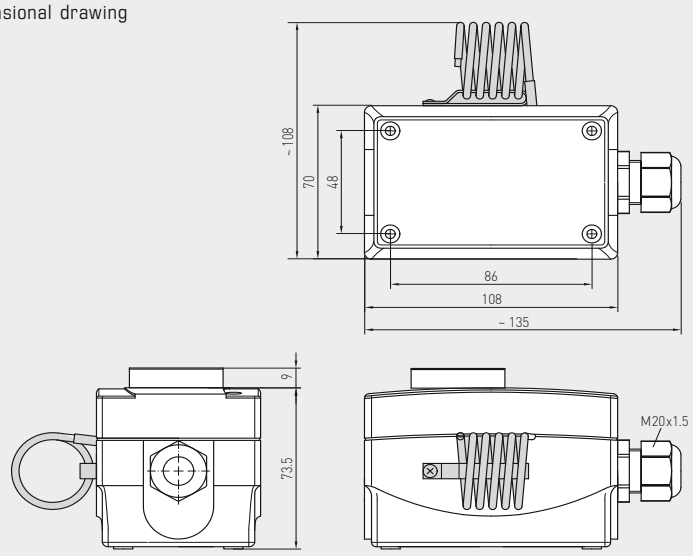

Connecting diagram **TR 040** **TR 060**

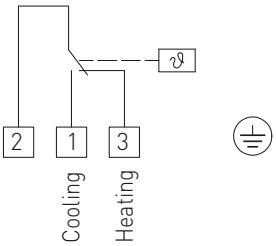

THERMASREG® TR 040 / TR 060 Temperature controllers, one-step

Type / WG01	Temperature Range	Thermal Operating Difference (fixed) approx.	Max. Capillary Temperature	Item No.
TR 040 / 060				**TR** (External setting)
TR-040	0...+40 °C	2 K	+65 °C	1102-1050-1100-200
TR-060	0...+60 °C	2 K	+75 °C	1102-1050-1100-300
TR 040 U / 060 U				**TW** (Internal setting)
TR-040 U	0...+40 °C	2 K	+65 °C	1102-1050-2100-200
TR-060 U	0...+60 °C	2 K	+75 °C	1102-1050-2100-300

Mechanical temperature controller / wet room temperature controller **THERM**ASREG® **TR 22** with switching output (one-step) and copper capillary, working without external voltage. It is used for monitoring and controlling temperatures in heat generation plants, in heating, ventilation and air conditioning systems, for ventilation, cooling and climate control in halls, cold storage rooms, greenhouses, nurseries, stables, breeding rooms, as industrial room thermostat or surface-mounted thermostat in industrial applications as well as in wet room and outdoor areas.

TR 22
(one-step)
TR



TR 22 U
(one-step)
TW



TECHNICAL DATA

Switching capacity: (Contact load)	24…250 V AC +10 %, 16 A, cos φ = 1.0 24…250 V AC +10 %, 1.5 A, cos φ = 0.6 at 24 V AC min. 150 mA
Contact:	dust-proof switch block unit as potential-free single-pole changeover contact
Enclosure:	plastic, UV-stabilised, material polyamide, 30 % glass-globe reinforced, colour traffic white (similar to RAL 9016)
Enclosure dimensions:	108 x 70 x 73.5 mm (Thor 2)
Cable gland:	M 20 x 1.5; including strain relief
Enclosure temperature:	–35…+65 °C
Design principle:	torsion meter with liquid filling
Capillary:	copper
Tolerance:	T_{min} ± 3 K; T_{max} ± 3 K
Electrical connection:	0.14 - 2.5 mm² via terminal screws
Protection class:	I (according to EN 60 730)
Protection type:	IP 65 (according to EN 60 529)
Standards:	CE conformity, EMC directive 2014 / 30 / EU, low-voltage directive 2014 / 35 / EU

FUNCTION

Heating: The preset setpoint (scale value) is equivalent to the switch-off value of the heating. The switch-on value is lower by the amount of operating difference. Contact 2 - 3 breaks when temperature rises to the preset value.

Cooling: The preset setpoint (scale value) is equivalent to the switch-on value of the cooling. The switch-off value is lower by the amount of operating difference. Contact 1 - 2 closes when temperature rises to the preset value.

Dimensional drawing **TR 22**

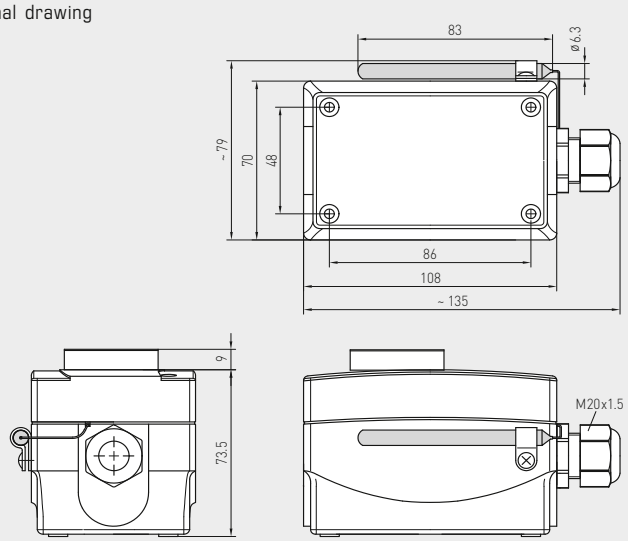

Connecting diagram **TR 22**

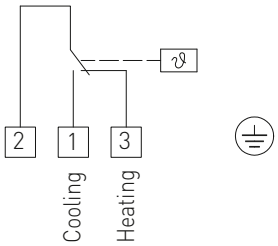

THERMASREG® TR 22 Temperature controllers, one-step

Type / WG01	Temperature Range	Thermal Operating Difference (fixed) approx.	Max. Capillary Temperature	Item No.
TR 22				**TR** (External setting)
TR-22	–35…+35 °C	3 K (± 1 K)	+60 °C	1102-1050-1100-100
TR 22 U				**TW** (Internal setting)
TR-22 U	–35…+35 °C	3 K (± 1 K)	+60 °C	1102-1050-2100-100

**Temperature controllers, two-step,
with switching output**

S+S REGELTECHNIK

Mechanical temperature controller / wet room temperature controller **THERM**ASREG® **TR 04040** with two independently switching outputs, which are separately adjustable (e.g. for switching between day and night time) and stainless steel capillary (spiral coil sensor), working without external voltage. It is used for monitoring and controlling temperatures in heat generation plants, in heating, ventilation and air conditioning systems, for ventilation, cooling and climate control in halls, cold storage rooms, greenhouses, nurseries, stables, breeding rooms, as industrial room thermostat or surface-mounted thermostat in industrial applications as well as in wet room and outdoor areas.

TR 04040



TR 04040 U



TECHNICAL DATA

Switching capacity: (Contact load)	24...250 V AC +10 %, 16 A, cos φ = 1.0 24...250 V AC +10 %, 1.5 A, cos φ = 0.6 at 24 V AC min. 150 mA
Contact:	dust-proof switch block unit as potential-free single-pole changeover contact (two changeover contacts, separately adjustable)
Enclosure:	plastic, UV-stabilised, material polyamide, 30 % glass-globe reinforced, colour traffic white (similar to RAL 9016)
Enclosure dimensions:	108 x 70 x 73.5 mm (Thor 2)
Cable gland:	2x M 20 x 1.5; including strain relief
Enclosure temperature:	–10...+65 °C
Capillary:	stainless steel **V2A** (1.4303)
Tolerance:	T_{min} ± 3 K; T_{max} ± 3 K; at +20 °C ± 1K
Electrical connection:	0.14 - 2.5 mm² via terminal screws
Protection class:	I (according to EN 60 730)
Protection type:	IP 65 (according to EN 60 529)
Standards:	CE conformity, EMC directive 2014 / 30 / EU, low-voltage directive 2014 / 35 / EU

FUNCTION

Heating: Contacts 2 - 3 and 5 - 6 break when temperature rises to the preset value.
Cooling: Contacts 2 - 1 and 5 - 4 break when temperature drops to the preset value.

Dimensional drawing **TR 04040**

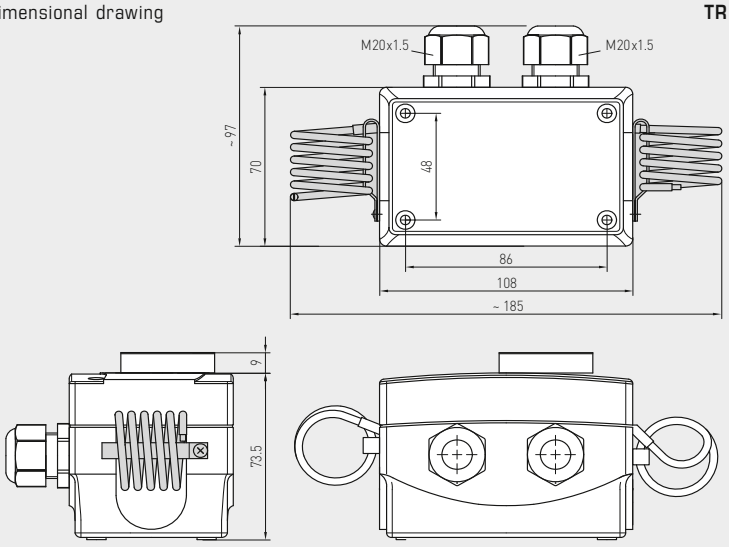

Connecting diagram **TR 04040**

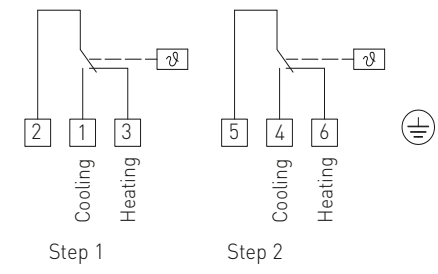

THERMASREG® TR 04040 Temperature controllers, two-step

Type / WG01	Temperature Range (adjustable) 1.	2.	Thermal Operating Difference (fixed) approx. 1.	2.	Max. Capillary Temperature	Item No.
TR 04040						**TR + TW** (External / Internal setting)
TR-04040	0...+40 °C	0...+40 °C	2 K	2K	+65 °C	1102-1050-1200-200
TR 04040 U						**TW + TW** (Internal setting)
TR-04040 U	0...+40 °C	0...+40 °C	2 K	2K	+65 °C	1102-1050-2200-200

Mechanical temperature controller **THERM**ASREG® **TR xx - F** with remote sensor and switching output (one-step), working as capillary thermostat / capillary controller without external voltage. This capillary controller is used for monitoring and to control temperatures of non-aggressive liquid or gaseous media in heating, ventilation and air conditioning technology as well as in mechanical and apparatus engineering, for installation in immersion sleeves or air conditioning ducts.

TRxx-F



TRxx-F-U



TECHNICAL DATA

Switching capacity: (Contact load)	24…250 V AC +10 %, 16 A, cos φ = 1.0 24…250 V AC +10 %, 1.5 A, cos φ = 0.6 at 24 V AC min. 150 mA
Contact:	dust-proof switch block unit as potential-free single-pole changeover contact
Enclosure:	plastic, UV-stabilised, material polyamide, 30 % glass-globe reinforced, colour traffic white (similar to RAL 9016)
Enclosure dimensions:	108 x 70 x 73.5 mm (Thor 2)
Cable gland:	M 20 x 1.5; including strain relief
Enclosure temperature:	–10...+65 °C
Design principle:	torsion meter with liquid filling
Sensor:	copper tube, length of capillary = 1 m with PVC protective hose, Ø 6.8 mm
Tolerance:	T_{min} ± 3 K; T_{max} ± 3 K
Inserted length:	immersion sleeves EL = 150 mm (accessories see table)
Electrical connection:	0.14 - 2.5 mm² via terminal screws
Protection class:	I (according to EN 60 730)
Protection type:	IP 65 (according to EN 60 529)
Standards:	CE conformity, EMC directive 2014 / 30 / EU, low-voltage directive 2014 / 35 / EU
FUNCTION	**Heating:** wire contacts 2 - 3 **Cooling:** wire contacts 2 - 1

Dimensional drawing **TRxx-F**

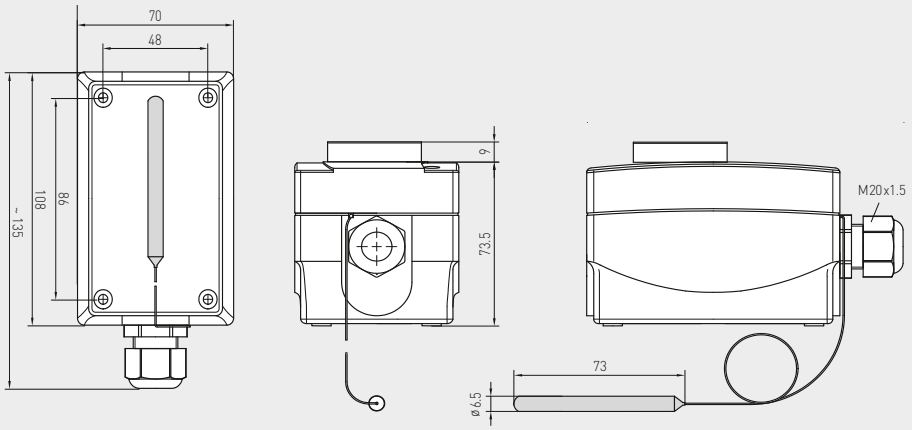

Connecting diagram **TRxx-F**

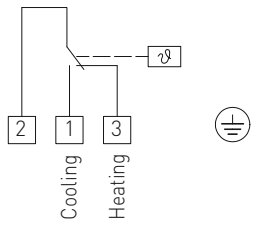

THERMASREG® TR xx - F Temperature controllers, one-step

Type / WG01	Temperature Range	Thermal Operating Difference (fixed) approx.	Max. Capillary Temperature	Item No.
TRxx-F				**TR** (External setting)
TR-1-F	–35… +35 °C	3 K (± 1 K)	+60 °C	1102-1056-1110-100
TR-060-F	0… +60 °C	3 K (± 1 K)	+75 °C	1102-1050-1110-300
TR-090-F	0… +90 °C	3 K (± 1 K)	+120 °C	1102-1050-1110-400
TR-0120-F	0…+120 °C	5 K (± 1 K)	+135 °C	1102-1050-1110-500
TR-50140-F	+50…+140 °C	5 K (± 1 K)	+150 °C	1102-1050-1110-600
Extra charge:	**U** = Internal setting (**TW**), e. g. TR - 090 - F - U			
Accessories				
THR-MS-08/150	Brass immersion sleeve, EL = 150 mm, Ø 8 x 0.5 mm			7100-0011-3404-000
THR-VA-09/150	Stainless steel immersion sleeve **V2A** (1.4301), EL = 150 mm, Ø 9 x 1.0 mm			7100-0012-3032-000
	For further information, see the last chapter!			

**Equipment sensor / controller, including immersion sleeve,
EC type-tested, TÜV tested,
with switching output**

S+S REGELTECHNIK

DIN-tested German quality product. Temperature control and limiting device for heat generation plants in accordance with DIN EN 14597. Safety temperature limiter (STB) with EC type test (module B) according to directive 2014 / 68 / EU.

Mechanical temperature control device / rod thermostat **THERM**ASREG® **ETR** with switching output, used for monitoring, controlling or limiting the temperatures of liquid or gaseous media as a boiler controller or in heating, air conditioning technology as well as in mechanical and apparatus engineering and in heat generation plants.
It is available as one-step or two-step device, as adjustable temperature controller **TR**, temperature monitor **TW**, or as safety temperature limiter **STB**.





TECHNICAL DATA

Switching capacity: (Contact load)	24 ... 250 V AC + 10 %, 10 A, cos φ = 1.0 24 ... 250 V AC + 10 %, 1.5 A, cos φ = 0.6 at 24 V AC min. 150 mA
Contact:	dust-proof switch block unit as potential-free single-pole or two-pole changeover contact
Enclosure:	plastic, UV-stabilised, material polyamide, 30 % glass-globe reinforced, colour traffic white (similar to RAL 9016)
Enclosure dimensions:	108 x 70 x 73.5 mm (Thor 2)
Cable gland:	M 20 x 1.5; including strain relief
Measuring element:	torsion meter with liquid filling, liquid expansion temperature feeler
Mounting position:	arbitrary
Ambient temperature:	–10...+65 °C at the switch block enclosure
Tolerance:	T_{min} ± 5 K; T_{max} ± 3 K
Immersion sleeves:	**THR-ms-08 / xx**, Single sleeve brass, nickel-plated, Ø = 8 mm, R ½" straight pipe thread, wrench size 22, p_{max} = 10 bar, T_{max} = +150 °C **THR-VA-09 / xx**, Single sleeve stainless steel **V4A** (1.4571), Ø = 9 mm, G ½" straight pipe thread, wrench size 22, p_{max} = 25 bar, T_{max} = +150 °C **THR-VA-17 / xx**, Double sleeve stainless steel **V4A** (1.4571), Ø = 17 mm, G ½" straight pipe thread, wrench size 22, p_{max} = 25 bar, T_{max} = +150 °C (Depending on the type, the relevant immersion sleeve is included in the scope of delivery, see table)
Operating medium:	Water, oil, air and exhaust gas
Inserted length:	150 mm, 200 mm
Process connection:	screwed socket
Electrical connection:	0.14 - 2.5 mm² via terminal screws
Protection class:	I (according to EN 60 730)
Protection type:	IP 65 (according to EN 60 529)
Standards:	CE conformity, EMC directive 2014 / 30 / EU, low-voltage directive 2014 / 35 / EU
Tests:	**EC type test (module B) according to directive 2014 / 68 / EU,** certificate No.: IS-TAF-MUC 18 03 2652130 002, DIN EN 14597, register Nos.: **STB 1201, TR / STB 1202**
FUNCTION	**TW, TR:** Contact 2-3 breaks when temperature rises to the preset value. **STB:** Contact 2-1 or 5-4 (two-step) breaks when temperature rises to the preset value. Restart is possible only after cooling off by approx. 15 K - 20 K by pressing the reset button.

Equipment sensor / controller, including immersion sleeve, EC type-tested, TÜV tested, with switching output

Configuration variants:

TW
Temperature monitor
(internal setting)

TR
Temperature controller
(external setting)

STB
Safety temperature limiter
(internal setting)

TW+TW
Double temperature monitor
(internal setting)

TR + STB
Temperature controller
(external setting) +
Safety temperature limiter
(internal setting)

Connecting diagram **TW, TR** — **ETR** (one-step)

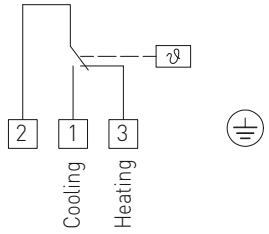

Connecting diagram **TW+TW** — **ETR** (two-step)

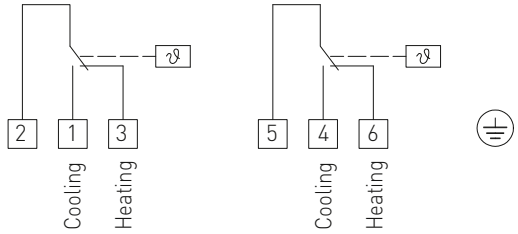

Connecting diagram **STB** — **ETR** (one-step)

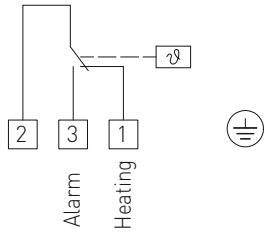

Connecting diagram **TR + STB** — **ETR** (two-step)

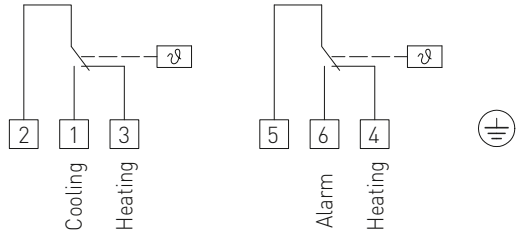



ZERTIFIKAT ◆ CERTIFICATE ◆ 증명서 ◆ СЕРТИФИКАТ ◆ CERTIFICADO ◆ CERTIFICAT

TÜV SÜD Industrie Service

CERTIFICATE

valid until: 25.02.2028

ZERTIFIKAT

gültig bis: 25.02.2028

EU Type examination (module B) - production type - according to Directive 2014/68/EU

EU-Baumusterprüfung (Modul B) - Baumuster - nach Richtlinie 2014/68/EU

Certificate No.: Z-IS-TAF-MUC-18-03-2652130-002
Zertifikat-Nr.:

Name and address of manufacturer: S+S Regeltechnik GmbH, Pirnaer Str. 20, 90411 Nürnberg
Name und Anschrift des Herstellers:

We herewith certify that the type mentioned below meets the requirements of the Directive 2014/68/EU.

Hiermit wird bescheinigt, dass das unten genannte Baumuster die Anforderungen der Richtlinie 2014/68/EU erfüllt.

Evaluation report No.: C-T 1382-01/18 dated 2018-02-26
Prüfbericht Nr.:

Scope of examination: Safety temperature limiter as safety accessory type: ETR and KTR (see page 3) basis of examination and details see page 3
Geltungsbereich:

Manufacturing plant: S+S Regeltechnik GmbH, Pirnaer Str. 20, 90411 Nürnberg
Fertigungsstätte:

München, 26.02.2018
(Place, date)
(Ort, Datum)

TÜV SÜD Industrie Service GmbH
Certification Body for pressure equipment
Johannes Steiglechner
089 5190-1027
feuerung@tuev-sued.de

Verification of Certificate by TÜV SÜD App Verify
Echtheitsprüfung durch App TÜV SÜD Verify

Notified Body, No. 0036
Notifizierte Stelle, Kennnummer 0036
TÜV SÜD Industrie Service GmbH
Westendstr. 199
80686 München
GERMANY

Page 1 of the certificate No. / Seite 1 zum Zertifikat Nr. Z-IS-TAF-MUC-18-03-2652130-002

TÜV®

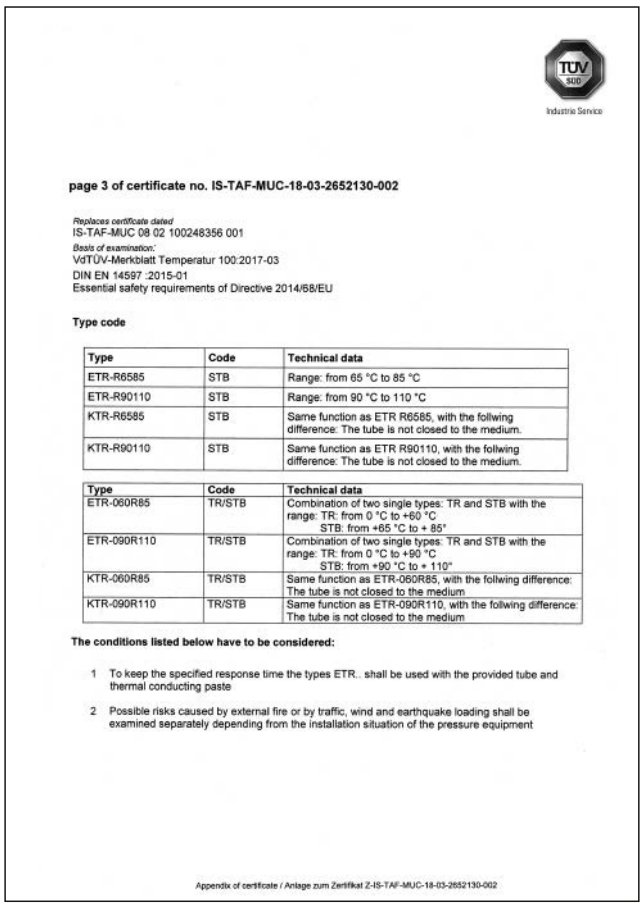

TÜV SÜD Industrie Service

page 3 of certificate no. IS-TAF-MUC-18-03-2652130-002

Replaces certificate dated
IS-TAF-MUC 08 02 100248356 001
Basis of examination:
VdTÜV-Merkblatt Temperatur 100:2017-03
DIN EN 14597 :2015-01
Essential safety requirements of Directive 2014/68/EU

Type code

Type	Code	Technical data
ETR-R6585	STB	Range: from 65 °C to 85 °C
ETR-R90110	STB	Range: from 90 °C to 110 °C
KTR-R6585	STB	Same function as ETR R6585, with the follwing difference: The tube is not closed to the medium.
KTR-R90110	STB	Same function as ETR R90110, with the follwing difference: The tube is not closed to the medium.

Type	Code	Technical data
ETR-060R85	TR/STB	Combination of two single types: TR and STB with the range: TR: from 0 °C to +60 °C STB: from +65 °C to + 85°
ETR-090R110	TR/STB	Combination of two single types: TR and STB with the range: TR: from 0 °C to +90 °C STB: from +90 °C to + 110°
KTR-060R85	TR/STB	Same function as ETR-060R85, with the follwing difference: The tube is not closed to the medium
KTR-090R110	TR/STB	Same function as ETR-090R110, with the follwing difference: The tube is not closed to the medium

The conditions listed below have to be considered:

1 To keep the specified response time the types ETR.. shall be used with the provided tube and thermal conducting paste

2 Possible risks caused by external fire or by traffic, wind and earthquake loading shall be examined separately depending from the installation situation of the pressure equipment

Appendix of certificate / Anlage zum Zertifikat Z-IS-TAF-MUC-18-03-2652130-002

THERMASREG® ETR

one-step

Equipment sensor / controller, including immersion sleeve,
EC type-tested, TÜV tested,
with switching output

S+S REGELTECHNIK

Dimensional drawing
Temperature monitor
TW

ETR-xxU
(one-step)

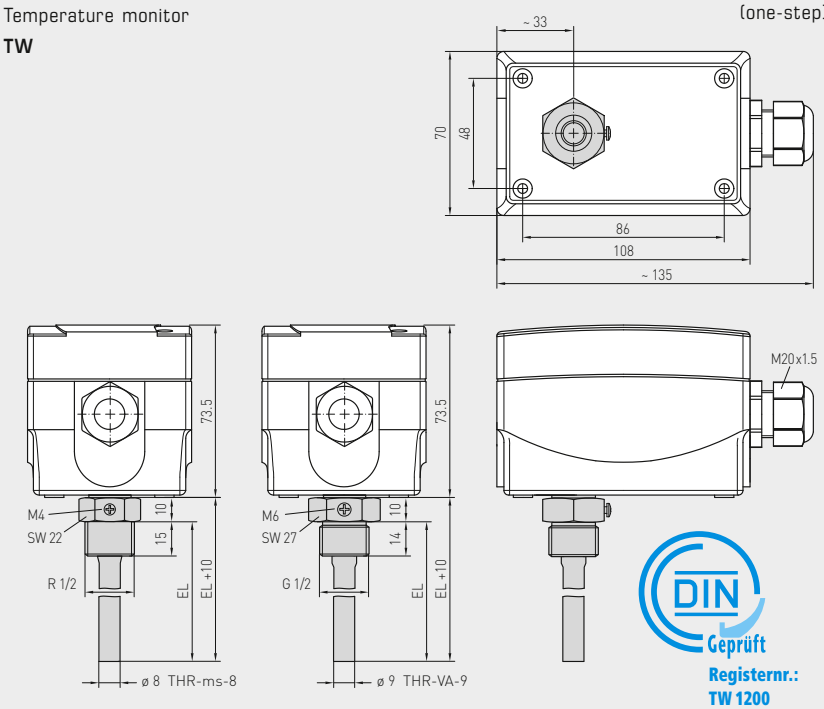

DIN Geprüft
Registernr.:
TW 1200



ETR-060U
ETR-090U
(one-step)
TW

Dimensional drawing
Temperature controller
TR

ETR-xx
(one-step)

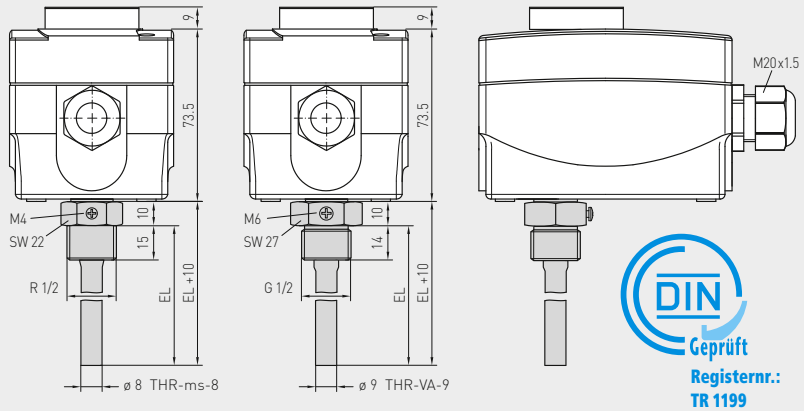

DIN Geprüft
Registernr.:
TR 1199



ETR-1
ETR-060
ETR-090
ETR-0120
ETR-50140
(one-step)
TR

Dimensional drawing
Safety temperature limiter
STB

ETR-Rxx
(one-step)

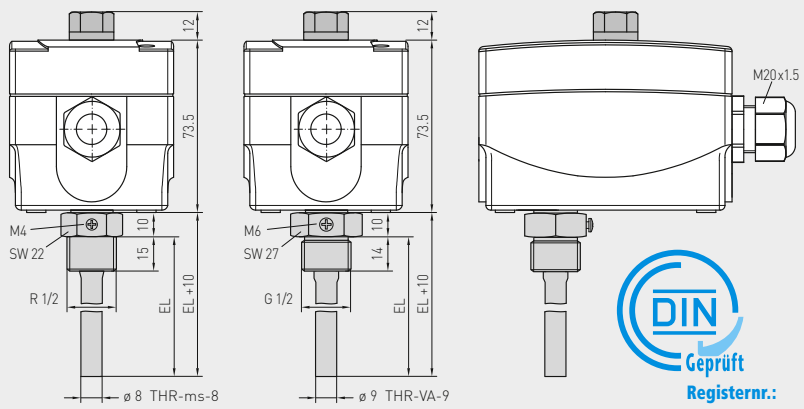

DIN Geprüft
Registernr.:
STB 1201



ETR-R6585
ETR-R90110
(one-step)
STB
selectable

THERMASREG® ETR	Equipment sensor / controller, one-step, including immersion sleeve				
Type / WG02	**Ø mm**	**Temperature Ranges (adjustable)**	**Thermal Operating Difference (fixed) approx.**	**Maximum Capillary Temp.**	**Item No.**
ETR-060 U					**TW**
ETR-060 U MS/100	8	0...+60 °C	3 K	+75 °C	1102-2010-2100-380
ETR-060 U MS/150	8	0...+60 °C	3 K	+75 °C	1102-2010-2100-310
ETR-060 U MS/200	8	0...+60 °C	3 K	+75 °C	1102-2010-2100-320
ETR-060 U VA/100	9	0...+60 °C	3 K	+75 °C	1102-2010-2100-390
ETR-060 U VA/150	9	0...+60 °C	3 K	+75 °C	1102-2010-2100-330
ETR-060 U VA/200	9	0...+60 °C	3 K	+75 °C	1102-2010-2100-340
ETR-090 U					**TW**
ETR-090 U MS/100	8	0...+90 °C	3 K	+120 °C	1102-2010-2100-480
ETR-090 U MS/150	8	0...+90 °C	3 K	+120 °C	1102-2010-2100-410
ETR-090 U MS/200	8	0...+90 °C	3 K	+120 °C	1102-2010-2100-420
ETR-090 U VA/100	9	0...+90 °C	3 K	+120 °C	1102-2010-2100-490
ETR-090 U VA/150	9	0...+90 °C	3 K	+120 °C	1102-2010-2100-430
ETR-090 U VA/200	9	0...+90 °C	3 K	+120 °C	1102-2010-2100-440
ETR-1					**TR**
ETR-1 MS/100	8	–35...+35 °C	3 K	+75 °C	1102-2010-1100-180
ETR-1 MS/150	8	–35...+35 °C	3 K	+75 °C	1102-2010-1100-110
ETR-1 MS/200	8	–35...+35 °C	3 K	+75 °C	1102-2010-1100-120
ETR-1 VA/100	9	–35...+35 °C	3 K	+75 °C	1102-2010-1100-190
ETR-1 VA/150	9	–35...+35 °C	3 K	+75 °C	1102-2010-1100-130
ETR-1 VA/200	9	–35...+35 °C	3 K	+75 °C	1102-2010-1100-140
ETR-060					**TR**
ETR-060 MS/100	8	0...+60 °C	3 K	+75 °C	1102-2010-1100-380
ETR-060 MS/150	8	0...+60 °C	3 K	+75 °C	1102-2010-1100-310
ETR-060 MS/200	8	0...+60 °C	3 K	+75 °C	1102-2010-1100-320
ETR-060 VA/100	9	0...+60 °C	3 K	+75 °C	1102-2010-1100-390
ETR-060 VA/150	9	0...+60 °C	3 K	+75 °C	1102-2010-1100-330
ETR-060 VA/200	9	0...+60 °C	3 K	+75 °C	1102-2010-1100-340
ETR-090					**TR**
ETR-090 MS/100	8	0...+90 °C	3 K	+120 °C	1102-2010-1100-480
ETR-090 MS/150	8	0...+90 °C	3 K	+120 °C	1102-2010-1100-410
ETR-090 MS/200	8	0...+90 °C	3 K	+120 °C	1102-2010-1100-420
ETR-090 VA/100	9	0...+90 °C	3 K	+120 °C	1102-2010-1100-490
ETR-090 VA/150	9	0...+90 °C	3 K	+120 °C	1102-2010-1100-430
ETR-090 VA/200	9	0...+90 °C	3 K	+120 °C	1102-2010-1100-440
ETR-0120					**TR**
ETR-0120 MS/100	8	0...+120 °C	5 K	+135 °C	1102-2010-1100-580
ETR-0120 MS/150	8	0...+120 °C	5 K	+135 °C	1102-2010-1100-510
ETR-0120 MS/200	8	0...+120 °C	5 K	+135 °C	1102-2010-1100-520
ETR-0120 VA/100	9	0...+120 °C	5 K	+135 °C	1102-2010-1100-590
ETR-0120 VA/150	9	0...+120 °C	5 K	+135 °C	1102-2010-1100-530
ETR-0120 VA/200	9	0...+120 °C	5 K	+135 °C	1102-2010-1100-540
ETR-50140					**TR**
ETR-50140 MS/100	8	+50...+140 °C	5 K	+150 °C	1102-2010-1100-680
ETR-50140 MS/150	8	+50...+140 °C	5 K	+150 °C	1102-2010-1100-610
ETR-50140 MS/200	8	+50...+140 °C	5 K	+150 °C	1102-2010-1100-620
ETR-50140 VA/100	9	+50...+140 °C	5 K	+150 °C	1102-2010-1100-690
ETR-50140 VA/150	9	+50...+140 °C	5 K	+150 °C	1102-2010-1100-630
ETR-50140 VA/200	9	+50...+140 °C	5 K	+150 °C	1102-2010-1100-640
ETR-R6585					**STB**
ETR-R6585 MS/100	8	+65...+85 °C	+0 / –15...20 K	+120 °C	1102-2010-6100-780
ETR-R6585 MS/150	8	+65...+85 °C	+0 / –15...20 K	+120 °C	1102-2010-6100-710
ETR-R6585 MS/200	8	+65...+85 °C	+0 / –15...20 K	+120 °C	1102-2010-6100-720
ETR-R6585 VA/100	9	+65...+85 °C	+0 / –15...20 K	+120 °C	1102-2010-6100-790
ETR-R6585 VA/150	9	+65...+85 °C	+0 / –15...20 K	+120 °C	1102-2010-6100-730
ETR-R6585 VA/200	9	+65...+85 °C	+0 / –15...20 K	+120 °C	1102-2010-6100-740
ETR-R90110					**STB**
ETR-R90110 MS/100	8	+90...+110 °C	+0 / –15...20 K	+120 °C	1102-2010-6100-880
ETR-R90110 MS/150	8	+90...+110 °C	+0 / –15...20 K	+120 °C	1102-2010-6100-810
ETR-R90110 MS/200	8	+90...+110 °C	+0 / –15...20 K	+120 °C	1102-2010-6100-820
ETR-R90110 VA/100	9	+90...+110 °C	+0 / –15...20 K	+120 °C	1102-2010-6100-890
ETR-R90110 VA/150	9	+90...+110 °C	+0 / –15...20 K	+120 °C	1102-2010-6100-830
ETR-R90110 VA/200	9	+90...+110 °C	+0 / –15...20 K	+120 °C	1102-2010-6100-840

Type designation: **ETR-xx_immersion sleeve material / inserted length (mm)**
MS = Brass nickel-plated, **VA** = Stainless steel V4A (1.4571)

For further information and accessories see next page...

**Equipment sensor / controller, including immersion sleeve,
EC type-tested, TÜV tested,
with switching output**

S+S REGELTECHNIK

Dimensional drawing
Double temperature monitor
TW + TW

ETR-xxU
(two-step)

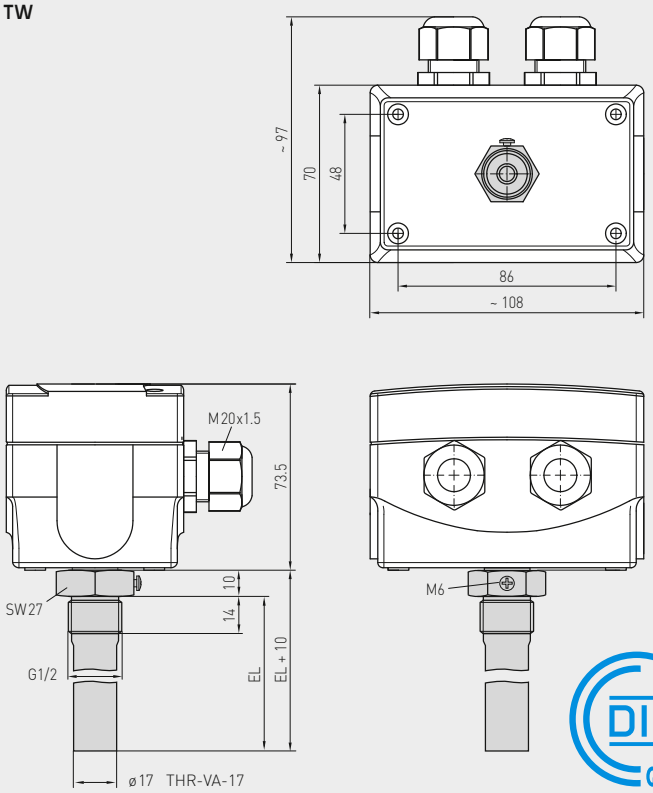

DIN Geprüft
Registernr.: TW / TW 1241



ETR-090090 U
(two-step)
TW + TW

Dimensional drawing
Temperature controller +
safety temperature limiter
TR + STB

ETR-xxRxx
(two-step)

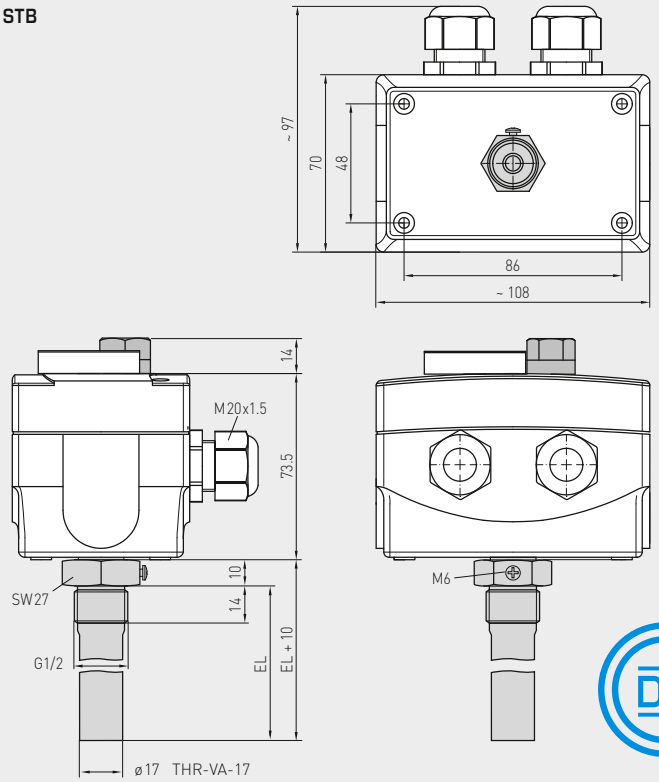

DIN Geprüft
Registernr.: TR / STB 1202



ETR-060R85
ETR-090R110
(two-step)
TR + STB
selectable

THERMASREG® ETR Equipment sensor / controller, two-step, including immersion sleeve							
Type / WG02	**Ø mm**	**Temperature Ranges (adjustable) 1.**	**2.**	**Thermal Operating Difference (fixed) approx. 1.**	**2.**	**Maximum Capillary Temp.**	**Item No.**
ETR-090090 U							**TW + TW**
ETR-090090 U VA/150	17	0...+90 °C	0...+90 °C	3 K	3K	+120 °C	1102-2010-2205-130
ETR-090090 U VA/200	17	0...+90 °C	0...+90 °C	3 K	3K	+120 °C	1102-2010-2205-140
ETR-060 R 85							**TR + STB**
ETR-060R85 VA/150	17	0...+60 °C	+65...+85 °C	3 K	+0 / –15...20 K	+120 °C	1102-2010-7205-230
ETR-060R85 VA/200	17	0...+60 °C	+65...+85 °C	3 K	+0 / –15...20 K	+120 °C	1102-2010-7205-240
ETR-090 R110							**TR + STB**
ETR-090R110 VA/150	17	0...+90 °C	+90...+110 °C	3 K	+0 / –15...20 K	+135 °C	1102-2010-7205-330
ETR-090R110 VA/200	17	0...+90 °C	+90...+110 °C	3 K	+0 / –15...20 K	+135 °C	1102-2010-7205-340

Type designation:	**ETR-xx_immersion sleeve material / inserted length (mm)** **MS** = Brass nickel-plated, **VA** = Stainless steel V4A (1.4571)
Extra charge:	**U** = Internal setting, unless included in a certain type **/2** = 2 steps, unless included in a certain type on request
Features:	**FT** = Manual reset when temperature drops **ST** = Manual reset when temperature rises **TR** = Temperature controller (**external setting**) **TB** = Temperature limiter (**internal setting**) **TW** = Temperature monitor (**internal setting**) **STB** = Safety temperature limiter (**internal setting**), **selectable,** with external switchpoint confirmation and restart interlock, restart by reset button at approx. 15...20 K below switching temperature (+0 K / - 15...20 K); **with EC type test (module B) according to directive 2014 / 68 / EU**
Note:	To ensure **accurate responsiveness** series **ETR** devices must only be used in connection with the immersion sleeves included in the scope of delivery while applying heat-conductive paste

Accessories		Item No.
WLP-1	**Heat-conductive paste**, silicone-free	7100-0060-1000-000
	For further information see last chapter!	

THERMASGARD® THR Immersion sleeve Ø 8 / 9 / 17 mm							
Type / WG01	**p_{max} (static)**	**T_{max}**	**Time Constant for Medium: Air**	**Water**	**Oil**	**Inserted Length (EL)**	**Item No. Ø**
THR-ms-08 / xx	**Brass nickel-plated**						**Ø 8** x 0.5 mm
THR-MS-08/150	10 bar	+150 °C	106 s	18 s	53 s	**150 mm**	7100-0011-3404-000
THR-MS-08/200	10 bar	+150 °C	106 s	18 s	53 s	**200 mm**	7100-0011-3403-000
THR-VA-09 / xx	**Stainless steel V4A** (1.4571)						**Ø 9** x 1.0 mm
THR-VA-09/150	25 bar	+150 °C	92 s	17 s	41 s	**150 mm**	7100-0012-3032-000
THR-VA-09/200	25 bar	+150 °C	92 s	17 s	41 s	**200 mm**	7100-0012-3042-000
THR-VA-17 / xx	**Stainless steel V4A** (1.4571)						**Ø 17** x 1.0 mm
THR-VA-17/150	25 bar	+150 °C	–	45 s	55 s	**150 mm**	7100-0012-3033-000
THR-VA-17/200	25 bar	+150 °C	–	45 s	55 s	**200 mm**	7100-0012-3404-000
Ordering example:	THR - ms - 08 / **150** (Brass immersion sleeve, Ø = 8 mm, **EL = 150** mm) THR - VA - 09 / **150** (Stainless steel immersion sleeve, Ø = 9 mm, **EL = 150** mm) THR - VA - 17 / **200** (Stainless steel immersion sleeve, Ø = 17 mm, **EL = 200** mm)						
Note:	inner diameter of socket 15.0 mm						

THERMASREG® KTR

**Duct temperature controllers, including mounting flange,
EC type-tested, TÜV tested,
with switching output**

S+S REGELTECHNIK

DIN-tested German quality product. Temperature control and limiting device for heat generation plants in accordance with DIN EN 14597. Safety temperature limiter (STB) with EC type test (module B) according to directive 2014 / 68 / EU.

Mechanical temperature control device / rod thermostat **THERM**ASREG® **KTR** with switching output, used for monitoring, controlling or limiting the temperatures of gaseous media as a boiler controller or in heating, air conditioning technology as well as in mechanical and apparatus engineering and in heat generation plants.
It is available as one-step or two-step device, as adjustable temperature controller **TR**, temperature monitor **TW**, or as safety temperature limiter **STB**.





TECHNICAL DATA

Switching capacity: (Contact load)	24...250 V AC +10 %, 10 A, cos φ = 1.0 24...250 V AC +10 %, 1.5 A, cos φ = 0.6 at 24 V AC min. 150 mA
Contact:	dust-proof switch block unit as potential-free, single-pole or two-pole changeover contact
Enclosure:	plastic, UV-stabilised, material polyamide, 30 % glass-globe reinforced, colour traffic white (similar to RAL 9016)
Enclosure dimensions:	108 x 70 x 73.5 mm (Thor 2)
Cable gland:	M 20 x 1.5; including strain relief
Measuring element:	torsion meter with liquid filling, liquid expansion temperature feeler
Mounting position:	arbitrary
Ambient temperature:	–10...+65 °C at the switch block enclosure
Tolerance:	T_{min} ± 5 K; T_{max} ± 3 K
Operating medium:	Air
Protective tube:	**metal,** material CuZn37 (2.0321), Ø 14 mm, NL = 205 mm
Inserted length:	approx. 205 mm (with flange); approx. 184 mm (without flange)
Process connection:	by mounting flange (included in the scope of delivery)
Electrical connection:	0.14 - 2.5 mm² via terminal screws
Protection class:	I (according to EN 60 730)
Protection type:	IP 65 (according to EN 60 529)
Standards:	CE conformity, EMC directive 2014 / 30 / EU, low-voltage directive 2014 / 35 / EU
Tests:	**EC type test (module B) according to directive 2014 / 68 / EU,** certificate No.: IS-TAF-MUC 18 03 2652130 002, DIN EN 14597, register Nos.: **STB 1201, TR / STB 1202**
FUNCTION	**TW, TR:** Contact 2-3 breaks when temperature rises to the preset value. **STB:** Contact 2-1 or 5-4 (two-step) breaks when temperature rises to the preset value. Restart is possible only after cooling off by approx. 15 K - 20 K by pressing the reset button.

Configuration variants:

TW
Temperature monitor
(internal setting)

TR
Temperature controller
(external setting)

STB
Safety temperature limiter
(internal setting)

TW+TW
Double temperature monitor
(internal setting)

TR + STB
Temperature controller
(external setting) +
Safety temperature limiter
(internal setting)

Connecting diagram **KTR** (one-step)
TW, TR

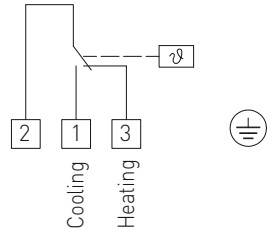

Connecting diagram **KTR** (two-step)
TW+TW

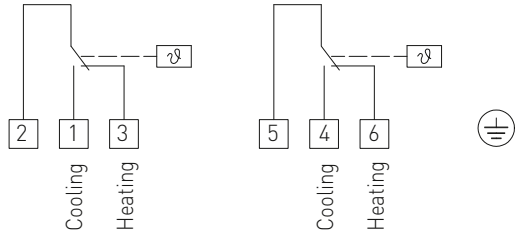

Connecting diagram **KTR** (one-step)
STB

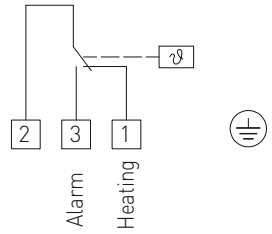

Connecting diagram **KTR** (two-step)
TR + STB

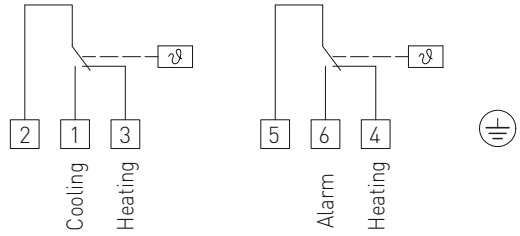



ZERTIFIKAT ◆ CERTIFICATE ◆ 證書 ◆ СЕРТИФИКАТ ◆ CERTIFICADO ◆ CERTIFICAT

TÜV SÜD Industrie Service

CERTIFICATE

valid until: 25.02.2028

ZERTIFIKAT

gültig bis: 25.02.2028

EU Type examination (module B) - production type - according to Directive 2014/68/EU

EU-Baumusterprüfung (Modul B) - Baumuster - nach Richtlinie 2014/68/EU

Certificate No.: Z-IS-TAF-MUC-18-03-2652130-002
Zertifikat-Nr.:

Name and address of manufacturer: S+S Regeltechnik GmbH
Name und Anschrift des Herstellers: Pirnaer Str. 20
90411 Nürnberg

We herewith certify that the type mentioned below meets the requirements of the Directive 2014/68/EU.

Hiermit wird bescheinigt, dass das unten genannte Baumuster die Anforderungen der Richtlinie 2014/68/EU erfüllt.

Evaluation report No.: C-T 1382-01/18 dated 2018-02-26
Prüfbericht Nr.:

Scope of examination: Safety temperature limiter as safety accessory
Geltungsbereich: type: ETR and KTR (see page 3)
basis of examination and details see page 3

Manufacturing plant: S+S Regeltechnik GmbH
Fertigungsstätte: Pirnaer Str. 20
90411 Nürnberg

München, 26.02.2018
(Place, date)
(Ort, Datum)

TÜV SÜD Industrie Service GmbH
Certification Body for pressure equipment
Johannes Steiglechner
089 5190-1027
feuerung@tuev-sued.de

Verification of Certificate by TÜV SÜD App Verify
Echtheitsprüfung durch App TÜV SÜD Verify

Notified Body, No. 0036
Notifizierte Stelle, Kennnummer 0036
TÜV SÜD Industrie Service GmbH
Westendstr. 199
80686 München
GERMANY

Page 1 of the certificate No. / Seite 1 zum Zertifikat Nr. Z-IS-TAF-MUC-18-03-2652130-002

TÜV®

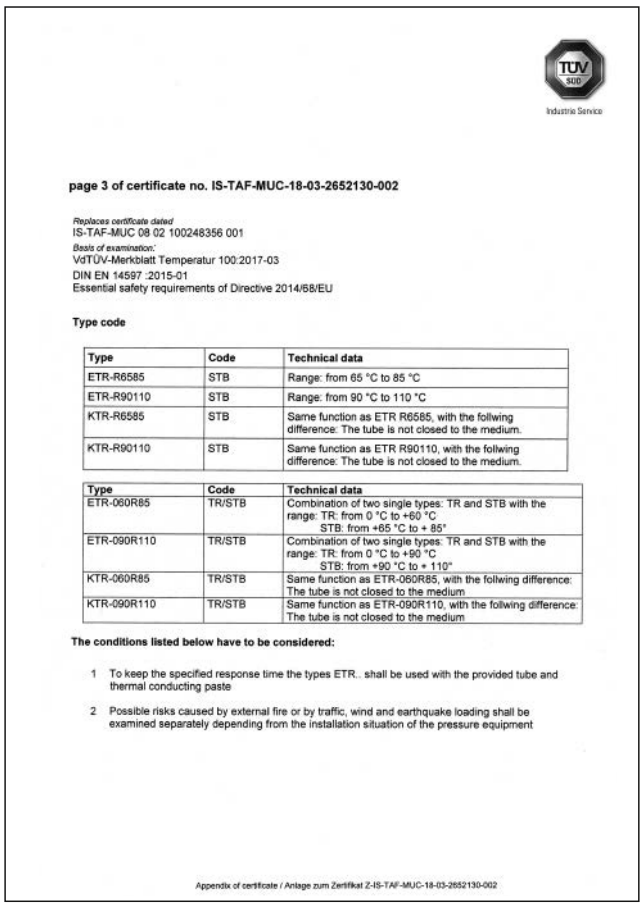

TÜV SÜD Industrie Service

page 3 of certificate no. IS-TAF-MUC-18-03-2652130-002

Replaces certificate dated
IS-TAF-MUC 08 02 100248356 001
Basis of examination:
VdTÜV-Merkblatt Temperatur 100:2017-03
DIN EN 14597 :2015-01
Essential safety requirements of Directive 2014/68/EU

Type code

Type	Code	Technical data
ETR-R6585	STB	Range: from 65 °C to 85 °C
ETR-R90110	STB	Range: from 90 °C to 110 °C
KTR-R6585	STB	Same function as ETR R6585, with the follwing difference: The tube is not closed to the medium.
KTR-R90110	STB	Same function as ETR R90110, with the follwing difference: The tube is not closed to the medium.

Type	Code	Technical data
ETR-060R85	TR/STB	Combination of two single types: TR and STB with the range: TR: from 0 °C to +60 °C STB: from +65 °C to + 85°
ETR-090R110	TR/STB	Combination of two single types: TR and STB with the range: TR: from 0 °C to +90 °C STB: from +90 °C to + 110°
KTR-060R85	TR/STB	Same function as ETR-060R85, with the follwing difference: The tube is not closed to the medium
KTR-090R110	TR/STB	Same function as ETR-090R110, with the follwing difference: The tube is not closed to the medium

The conditions listed below have to be considered:

1 To keep the specified response time the types ETR.. shall be used with the provided tube and thermal conducting paste

2 Possible risks caused by external fire or by traffic, wind and earthquake loading shall be examined separately depending from the installation situation of the pressure equipment

Appendix of certificate / Anlage zum Zertifikat Z-IS-TAF-MUC-18-03-2652130-002

Dimensional drawing
Temperature monitor
TW

KTR-xxU
(one-step)

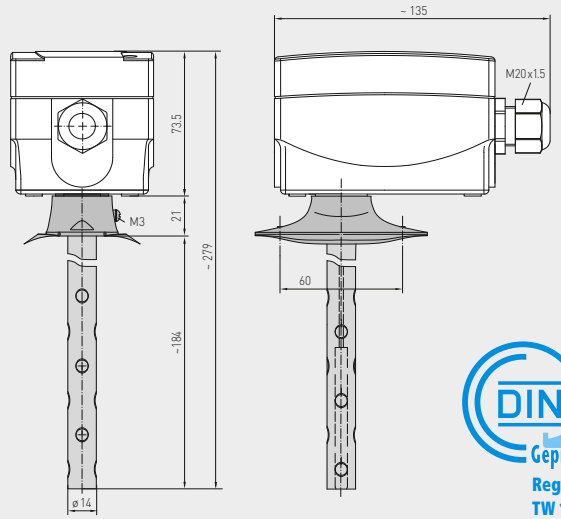

DIN Geprüft
Registernr.:
TW 1200



KTR-060U
KTR-090U
(one-step)
TW

Dimensional drawing
Temperature controller
TR

KTR-xx
(one-step)

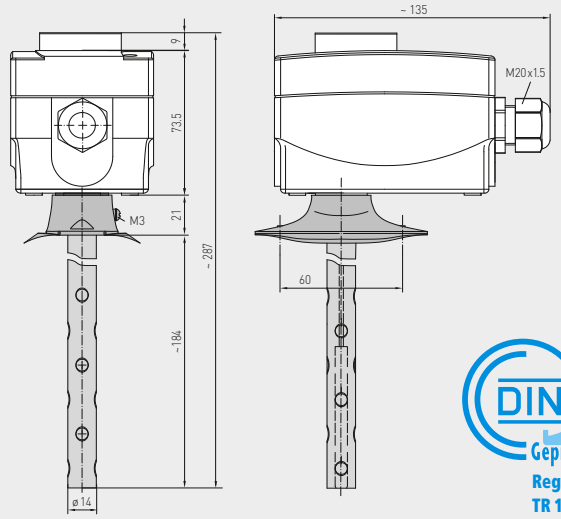

DIN Geprüft
Registernr.:
TR 1199



KTR-1
KTR-060
KTR-090
KTR-0120
KTR-50140
(one-step)
TR

Dimensional drawing
Safety temperature limiter
STB

KTR-Rxx
(one-step)

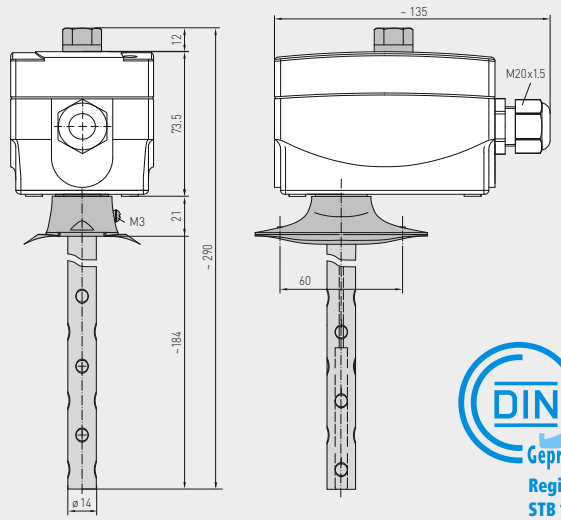

DIN Geprüft
Registernr.:
STB 1201



KTR-R6585
KTR-R90110
(one-step)
STB
adjustable

THERMASREG® KTR	Duct temperature controllers, one-step				
Type / WG02	**Ø mm**	**Temperature Ranges (adjustable)**	**Thermal Operating Difference (fixed) approx.**	**Maximum Capillary Temp.**	**Item No.**
KTR-060 U / 090 U					**TW**
KTR-060 U	14	0...+60 °C	3 K	+75 °C	1102-3010-2100-350
KTR-090 U	14	0...+90 °C	3 K	+120 °C	1102-3010-2100-450
KTR-xx					**TR**
KTR-1	14	–35...+35 °C	3 K	+75 °C	1102-3010-1100-150
KTR-060	14	0...+60 °C	3 K	+75 °C	1102-3010-1100-350
KTR-090	14	0...+90 °C	3 K	+120 °C	1102-3010-1100-450
KTR-0120	14	0...+120 °C	5 K	+135 °C	1102-3010-1100-550
KTR-50140	14	+50...+140 °C	5 K	+150 °C	1102-3010-1100-650
KTR-R6585 / R90110					**STB**
KTR-R6585	14	+65...+85 °C	+0 / –15...20 K	+120 °C	1102-3010-6100-750
KTR-R90110	14	+90...+110 °C	+0 / –15...20 K	+120 °C	1102-3010-6100-850

Extra charge:	**U** = Internal setting, unless included in a certain type **/2** = 2 steps, unless included in a certain type	on request
Equipment:	**FT** = Manual reset when temperature drops **ST** = Manual reset when temperature rises **TR** = Temperature controller (**external setting**) **TB** = Temperature limiter (**internal setting**) **TW** = Temperature monitor (**internal setting**) **STB** = Safety temperature limiter (**internal setting**), **selectable,** with external switchpoint confirmation and restart interlock, restart by reset button at approx. 15...20 K below switching temperature (+ 0 K / - 15...20 K) **with EC type test (module B) according to directive 2014 / 68 / EU**	

Accessories		
MF-14-K	**Mounting flange**, plastic	7100-0030-2000-000
	For further information see last chapter!	

Dimensional drawing **MF-14-K**

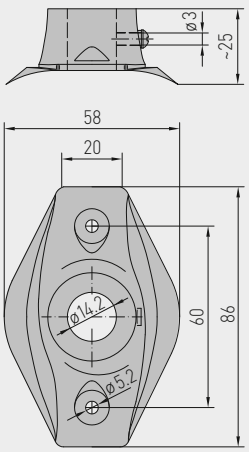

MF-14-K

Mounting flange,
plastic



**Duct temperature controllers, including mounting flange,
EC type-tested, TÜV tested,
with switching output**

S+S REGELTECHNIK

Dimensional drawing
Double temperature monitor
TW + TW

KTR-xx U
(two-step)

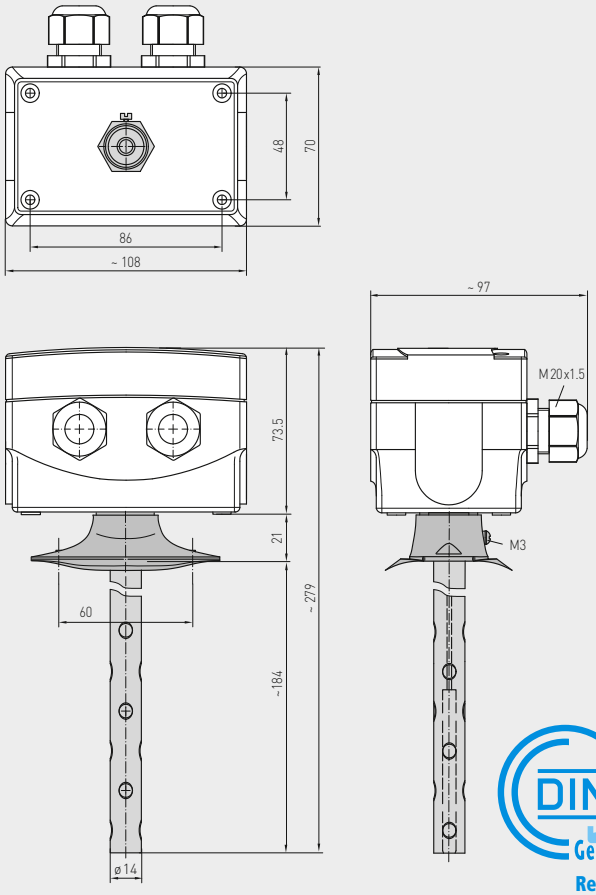

Registernr.:
TW / TW 1241



KTR-090090 U
(two-step)
TW + TW

Dimensional drawing
Temperature controller +
safety temperature limiter
TR + STB

KTR-xx R xx
(two-step)

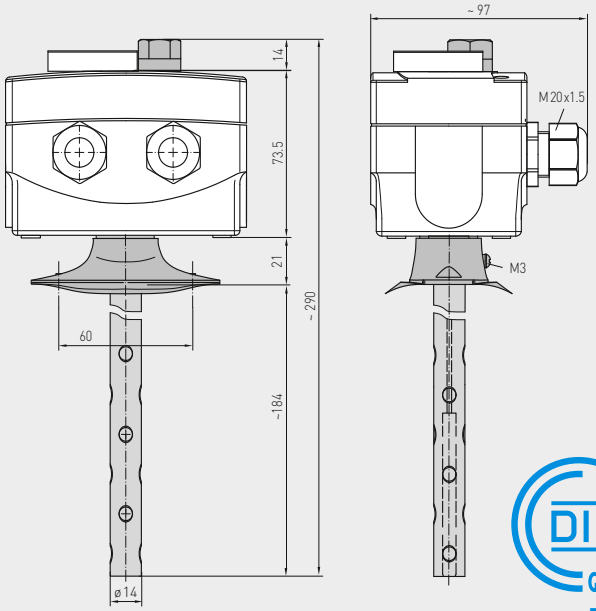

Registernr.:
TR / STB 1202



KTR-060 R 85
KTR-090 R 110
(two-step)
TR + STB
adjustable

THERMASREG® KTR Duct temperature controllers, two-step

Type / WG02	Ø mm	Temperature Ranges (adjustable) 1.	2.	Thermal Operating Difference (fixed) approx. 1.	2.	Maximum Capillary Temp.	Item No.
KTR-090090 U							**TW + TW**
KTR-090090 U	14	0...+90 °C	0...+90 °C	3 K	3K	+120 °C	1102-3010-2205-150
KTR-060 R 85							**TR + STB**
KTR-060R85	14	0...+60 °C	+65...+85 °C	3 K	+0 / –15...20 K	+120 °C	1102-3010-7205-250
KTR-090 R110							**TR + STB**
KTR-090R110	14	0...+90 °C	+90...+110 °C	3 K	+0 / –15...20 K	+135 °C	1102-3010-7205-350

Extra charge:	**U** =	Internal setting, unless included in a certain type	
	/2 =	**2 steps, unless included in a certain type**	on request
Features:	**FT** =	Manual reset when temperature drops	
	ST =	Manual reset when temperature rises	
	TR =	Temperature controller (**external setting**)	
	TB =	Temperature limiter (**internal setting**)	
	TW =	Temperature monitor (**internal setting**)	
	STB =	Safety temperature limiter (**internal setting**), **selectable,** with external switchpoint confirmation and restart interlock, restart by reset button at approx. 15...20 K below switching temperature (+ 0 K / - 15...20 K) **with EC type test (module B) according to directive 2014 / 68 / EU**	

Accessories		
MF-14-K	**Mounting flange**, plastic	7100-0030-2000-000
	For further information see last chapter!	

Dimensional drawing **MF-14-K**

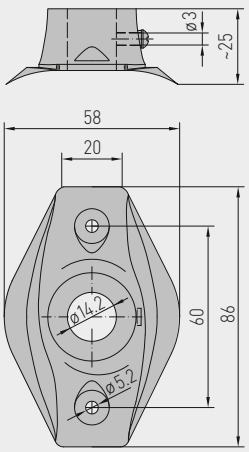

MF-14-K

Mounting flange,
plastic



S+S REGELTECHNIK

Surface contact temperature controllers, including tension spring

Mechanical temperature controllers / contact thermostats **THERM**ASREG® **ALTR** with switching output (two-position controller) for monitoring, controlling and limitation of temperatures at pipes or vessels, e.g. in connection with hot-water or floor heating systems. The contact temperature controller ALTR is built as one-step device, as adjustable temperature controller **TR** (with external setting) or as adjustable temperature monitor **TW** (with internal setting).

ALTR 060 / 090



ALTR 060 / 090 U



TECHNICAL DATA

Switching capacity: (Contact load)	16 (4) A; 24...250 V AC at 24 V AC min. 150 mA
Max. sensor temperature:	+110 °C
Contact:	dust-proof switch block unit as potential-free single-pole changeover contact
Enclosure:	ABS (acrylonitrile butadiene styrene), fibre-glass reinforced, base: steel, galvanised, top: grey, M 16 x 1.5
Enclosure temperature:	–35...+65 °C
Tolerance:	T_{min} ± 5 K; T_{max} ± 5 K
Sensor element:	bi-metal
Enclosure dimensions:	38 x 48 x 103 mm
Process connection:	by metal tension spring, 220 mm long (included in the scope of delivery)
Electrical connection:	0.14 - 1.5 mm² via terminal screws
Protection class:	I (according to EN 60730)
Protection type:	IP 40 (according to EN 60529)
Standards:	CE conformity, EMC directive 2014 / 30 / EU, low-voltage directive 2014 / 35 / EU
FUNCTION	**Heating:** wire contacts C - 1 **Cooling:** wire contacts C - 2

Dimensional drawing **ALTR 060 / 090**

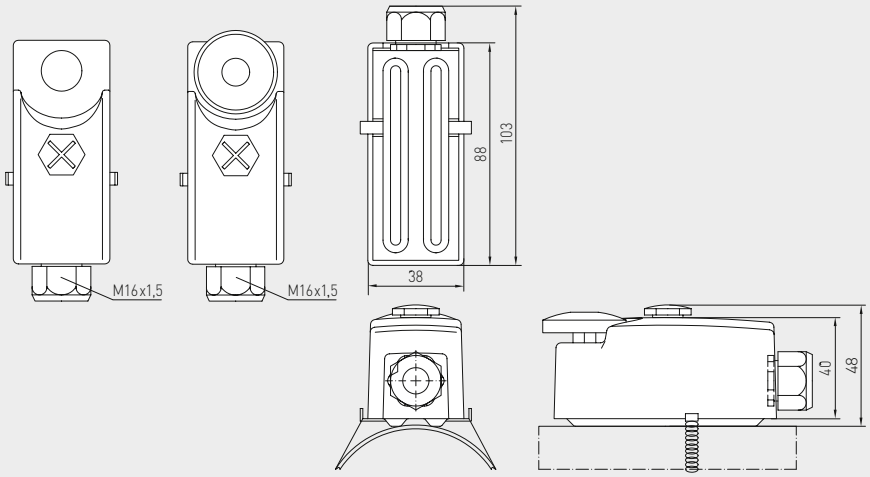

Connecting diagram **ALTR 060 / 090**

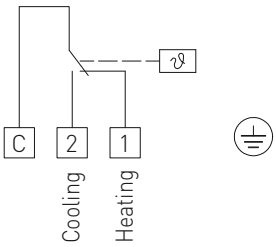

THERMASREG® ALTR 060 / 090 Surface contact temperature controllers

Type / WG01	Temperature Range	Thermal Operating Difference (fixed) approx.	Max. Capillary Temperature	Item No.
ALTR 060 / 090				**TR** (External setting)
ALTR-060	0...+60 °C	8 K (± 1 K)	+110 °C	1102-1040-1100-300
ALTR-090	0...+90 °C	8 K (± 1 K)	+110 °C	1102-1040-1100-400
ALTR 060 / 090 U				**TW** (Internal setting)
ALTR-060 U	0...+60 °C	8 K (± 1 K)	+110 °C	1102-1040-2100-300
ALTR-090 U	0...+90 °C	8 K (± 1 K)	+110 °C	1102-1040-2100-400

Mechanical temperature controllers / contact thermostats **THERM**ASREG® **ALTR** with switching output (two-position controller) for monitoring, controlling and limitation of temperatures at pipes or vessels, e.g. in connection with hot-water or floor heating systems. The contact temperature controller ALTR is built as one-step device, as adjustable temperature controller **TR** (with external setting) or as adjustable temperature monitor **TW** (with internal setting).

ALTR 1 / 3 / 5 / 7



ALTR 1 / 3 / 5 / 7 U



TECHNICAL DATA

Switching capacity: (Contact load)	24 ... 250 V AC +10 %, 16 A, cos φ = 1.0 24 ... 250 V AC +10 %, 1.5 A, cos φ = 0.6 at 24 V AC min. 150 mA
Contact:	dust-proof switch block unit as potential-free single-pole changeover contact
Enclosure:	plastic, UV-stabilised, material polyamide, 30 % glass-globe reinforced, colour traffic white (similar to RAL 9016)
Enclosure dimensions:	108 x 70 x 73.5 mm (Thor 2)
Cable gland:	M 20 x 1.5; including strain relief
Enclosure temperature:	–35...+65 °C
Tolerance:	T_{min} ± 5 K; T_{max} ± 5 K
Design principle:	torsion meter with liquid filling
Process connection:	endless strap in metal tightener (included in the scope of delivery)
Strap dimensions:	Ø = 13 - 92 mm (¼ - 3"), L = 300 mm
Electrical connection:	0.14 - 2.5 mm² via terminal screws
Protection class:	I (according to EN 60 730)
Protection type:	IP 65 (according to EN 60 529)
Standards:	CE conformity, EMC directive 2014 / 30 / EU, low-voltage directive 2014 / 35 / EU

FUNCTION

Heating: The preset setpoint (scale value) is equivalent to the switch-off value of the heating.
The switch-on value is lower by the amount of operating difference.
Contact 2-3 breaks when temperature rises to the preset value.

Cooling: The preset setpoint (scale value) is equivalent to the switch-on value of the cooling.
The switch-off value is lower by the amount of operating difference.
Contact 1-2 closes when temperature rises to the preset value.

Dimensional drawing **ALTR 1 / 3 / 5 / 7**

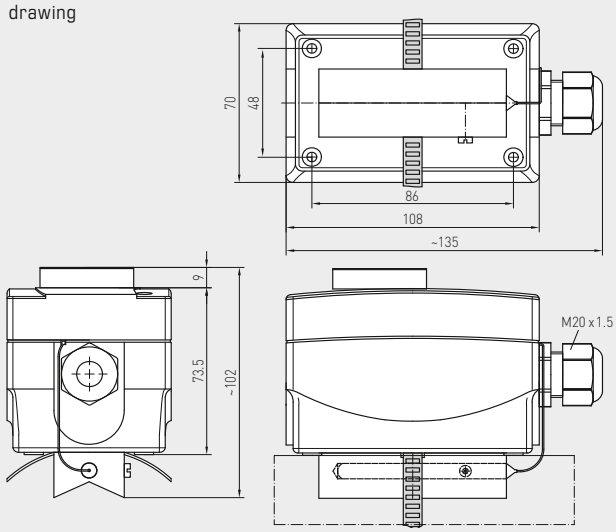

Connecting diagram **ALTR 1 / 3 / 5 / 7**

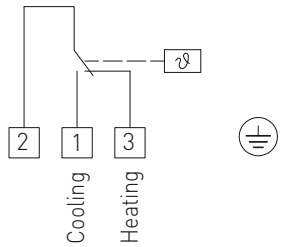

THERMASREG® ALTR 1 / 3 / 5 / 7 Surface contact temperature controllers

Type / WG01	Temperature Range	Thermal Operating Difference (fixed) approx.	Max. Capillary Temperature	Item No.
ALTR 1 / 3 / 5 / 7				**TR** (External setting)
ALTR-1	–35... +35 °C	5 K (± 1 K)	+60 °C	1102-1030-1100-100
ALTR-3	0... +60 °C	5 K (± 1 K)	+75 °C	1102-1030-1100-300
ALTR-5	0... +90 °C	5 K (± 1 K)	+120 °C	1102-1030-1100-400
ALTR-7	0...+120 °C	5 K (± 1 K)	+130 °C	1102-1030-1100-500
Extra charge:	**U** = Internal setting (**TW**), e. g. ALTR-1 U			

Frost protection thermostats, mechanical, one-step, with switching output

S+S REGELTECHNIK

The mechanical frost protection thermostat / frost monitor **THERM**ASREG® **FST** with switching output, fully-active sensor rod, with automatic reset, or with mechanical locking and manual reset, is available with capillaries in lengths of 0.6 m, 1.8 m, 3 m, 6 m, or 12 m. This frost protection monitor is used for air- and water-side temperature monitoring at heat exchangers, water circulation systems, and heating registers to prevent freezing up and to avoid frost damages, e. g. in ventilation and air conditioning ducts. All devices are self-secure with sensor breakage detection. In case of damage to the capillary tube – membrane system, the relay automatically switches to heating function. **FST-3** can also be used for monitoring liquids. The sensor tube can be installed inside an immersion sleeve. Mounting clamps **MK-05-K** are included in the delivery.

FST-1 / 5 / 7 / 8



FST-3



TECHNICAL DATA

Switching capacity:	10 (2) A, AC 250 V; because of gold-plated switching contacts also switching of signal voltages < 24 V
Setting range:	–10...+15 °C / +14 °F...+59 °F, factory setting to w = +5 °C (+41 °F)
Operating difference:	2 ± 1 K (3.6 ± 1.8 °F)
Reproducibility:	± 0.5 K (± 0.9 °F)
Contact:	dust-proof micro switch as single-pole potential-free changeover contact
Sensor responding length:	approx. 40 cm
Length of capillary tube:	see table of types (0.6...12 m)
Resetting:	**FST-xD** automatic **FST-xD-HR** manual
Permissible medium:	**FST-1/5/7/8** air **FST-3** water
Ambient temperatures:	maximum operating temperature: +70 °C (+158 °F) minimum operating temperature: w + min. +2 °C (min. +3.6 °F) storage / transport: –30...+70 °C (–22...+158 °F) capillary: max. +150 °C (+302 °F)
Process connection:	by mounting clamps **MK-05-K** (included in the scope of delivery)
Enclosure:	plastic, UV-stabilised, material polyamide, 30 % glass-globe reinforced, with quick-locking screws (slotted / Phillips head combination), colour traffic white (similar to RAL 9016)
Enclosure dimensions:	126 x 90 x 50 mm (Tyr 2)
Cable gland:	M 16 x 1.5; including strain relief
Other materials:	mechanical sheet metal parts: galvanised steel capillary tube: copper capillary tube filling: R 507 switching contacts: Ag / Ni (90% / 10%) gold-plated (3 µm)
Installation length:	arbitrary
Electrical connection:	0.14 - 2.5 mm²
Protection class:	I (according to EN 60 730-1)
Protection type:	IP 65 (according to EN 60 529)
Standards:	CE conformity, EMC directive 2014 / 30 / EU, low-voltage directive 2014 / 35 / EU
FUNCTION	Contact C - 2: danger of frost / sensor breakage Contact C - 3: normal operation

For further information and accessories see next page...

Dimensional drawing **FST-1/5/7/8**

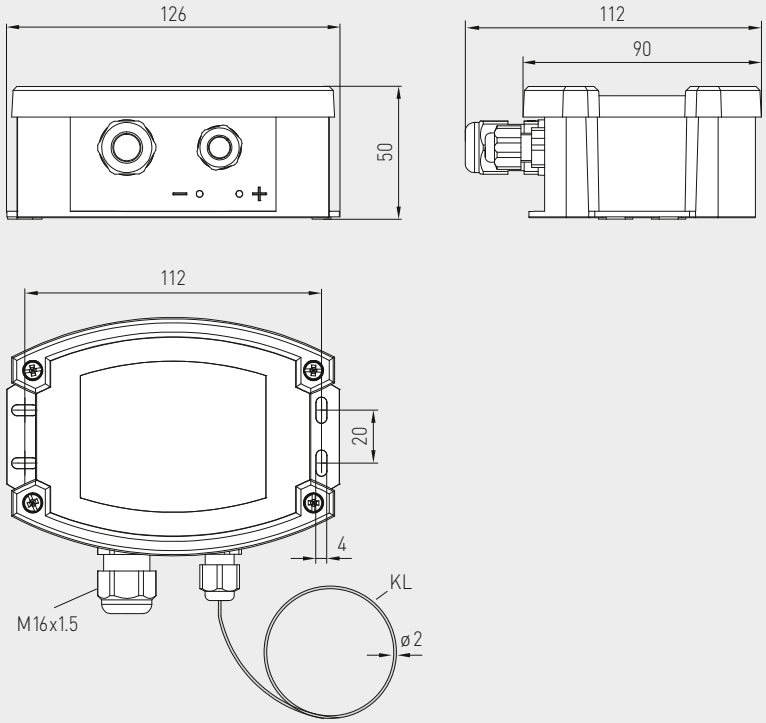

Dimensional drawing **KRD-04**

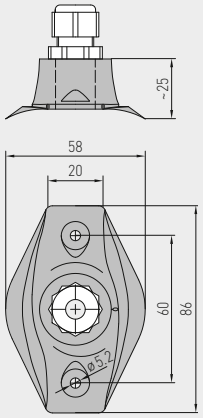

Dimensional drawing **MK-05-K**

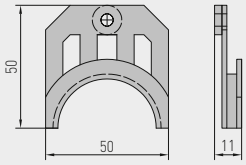

Dimensional drawing **FST-3**

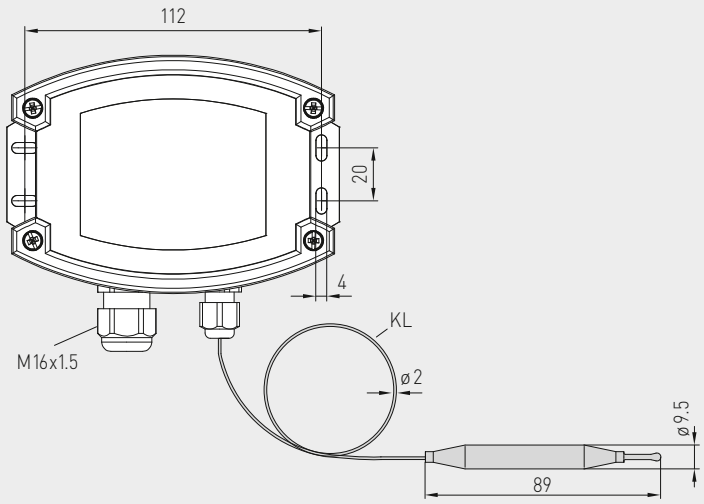

MK-05-K



KRD-04



Frost protection thermostats, mechanical, one-step, with switching output

S+S REGELTECHNIK

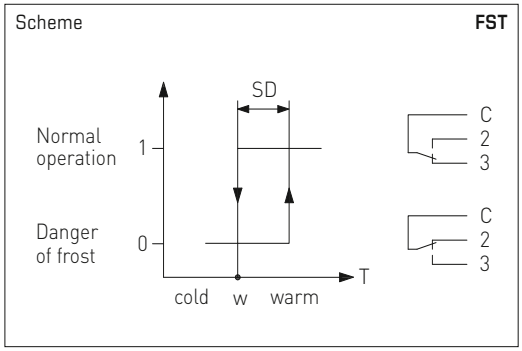

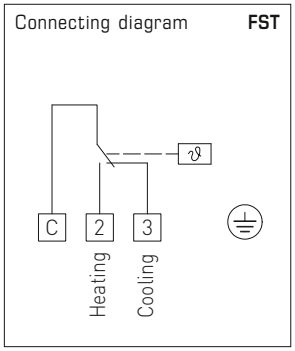

FST-1/5/7/8-HR
(manual rest)



FUNCTION

The switch inside frost protection thermostat **FST** responds (closes contact C-2) when temperature falls below the preset temperature setpoint over a capillary tube length of at least 40 cm. Simultaneously contact C-3 breaks and can be used as a signal contact. Resetting (closing contact C-3) happens automatically when temperature rises above the preset setpoint value again (on type **FST-xR** resetting must be done manually by pressing the reset button).

The **FST** is "intrinsically safe", i.e., in the event of damage to the capillary tube-membrane system, it automatically switches to the heating function. Contact C-2 closes and therefore can be used as operating contact. The air temperature is detected over the entire sensor length (capillary tube). The gas-filled (R 507) membrane system and the capillary tube constitute one measuring unit, which is mechanically coupled to the microswitch.

Capillary tube: The capillary tube is laid uniformly at the hot side of the air heater to be protected (in case of air coolers in front of the air cooler) at a distance of approx. 5 cm crosswise to the heat exchanger tubes over the entire area. For test purposes, it is recommended to make a loop of approx. 20 cm directly underneath the enclosure and before entering the air duct. To avoid damaging the capillary tube, a minimum bending radius of 20 mm must be observed. Installation is facilitated by using the mounting clamps available under accessories.

Frost simulation: The frost situation can be simulated and functioning of the device can be tested by dipping the capillary tube testing loop into a pot filled with ice water.

FST-3-HR
(manual rest)



WS-03
Weather and sun protection hood
(optional)



FST-x D
TW = temperature monitor
(automatically switching)



FST-x D-HR
TB = temperature limiter
(manual rest)



THERMASREG® FST Frost protection thermostats, mechanical					
Type / WG03	**Temperature Range**	**Thermal Operating Difference (fixed) approx.**	**Length of Capillary**	**Permissible Medium**	**Item No.**
FST-xx D					**TW**
FST-1D *	–10…+15 °C	2 K (± 1 K)	6.0 m	air	1102-1021-0102-000
FST-3D *	–10…+15 °C	2 K (± 1 K)	1.8 m	air / water	1102-1023-0102-000
FST-5D *	–10…+15 °C	2 K (± 1 K)	3.0 m	air	1102-1022-0102-000
FST-7D *	–10…+15 °C	2 K (± 1 K)	12.0 m	air	1102-1025-0102-000
FST-8D	–10…+15 °C	2 K (± 1 K)	0.6 m	air	1102-1024-0102-000
FST-xx D-HR					**TB**
FST-1D-HR *	–10…+15 °C	2 K (± 1 K)	6.0 m	air	1102-1021-1102-000
FST-3D-HR *	–10…+15 °C	2 K (± 1 K)	1.8 m	air / water	1102-1023-1102-000
FST-5D-HR *	–10…+15 °C	2 K (± 1 K)	3.0 m	air	1102-1022-1102-000
FST-7D-HR *	–10…+15 °C	2 K (± 1 K)	12.0 m	air	1102-1025-1102-000
FST-8D-HR	–10…+15 °C	2 K (± 1 K)	0.6 m	air	1102-1024-1102-000
Features:	FST-x **D** FST-x **D-HR**	**TW** = temperature monitor (**automatically switching**) **TB** = temperature limiter (**manual reset**)			

Accessories		
KRD-04	Capillary tube gland bracket	7100-0030-7000-000
MK-05-K	Mounting clamps (6 pieces) plastic (*= included in the scope of delivery)	7100-0034-1000-000
TH-MS-01	Immersion sleeves, brass, for FST-3	7100-0011-5402-000
TH-VA-02	Immersion sleeves, stainless steel **V2A** (1.4301), for FST-3	7100-0012-5402-000
WS-03	Weather and sun protection hood, 200 x 180 x 150 mm, stainless steel **V2A** (1.4301)	7100-0040-6000-000
	For further information see last chapter!	

THERMASREG® FST-K

**Duct frost protection thermostat,
incl. mounting flange, mechanical, one-step,
with switching output**

S+S REGELTECHNIK

Mechanical frost protection thermostat / frost monitor **THERM**ASREG® **FST-K** with switching output, duct tube monitored across the entire length, with automatic reset or with mechanical locking, with / without optional manual reset.
The frost protector is suitable for air side temperature monitoring at heat exchangers and heating registers to prevent freezing up and to avoid frost damage, e.g. in ventilation and air conditioning ducts.
The FST-K is intrinsically safe and is equipped with sensor breakage detection. In the event of damage to the capillary membrane system, the frost sensor automatically switches to the heating function. The scope of delivery includes the mounting flange **MF-14-K**.

TECHNICAL DATA

Switching capacity:	10 (2) A, AC 250 V; because of gold-plated switching contacts also switching of signal voltages < 24 V
Setting range:	–10...+15 °C / +14 °F...+59 °F, factory setting to w = +5 °C (+41 °F)
Operating difference:	2 ± 1 K (3.6 ± 1.8 °F)
Reproducibility:	± 0.5 K (± 0.9 °F)
Contact:	dust-proof micro switch as single-pole potential-free changeover contact
Resetting:	**FST-K** automatic **FST-K-HR** manual (by hand)
Permissible medium:	Air
Ambient temperatures:	maximum operating temperature: +70 °C (+158 °F) minimum operating temperature: w + min. +2 °C (min. +3.6 °F) storage / transport: –30...+70 °C (–22...+158 °F)
Enclosure:	plastic, UV-stabilised, material polyamide, 30 % glass-globe reinforced, colour traffic white (similar to RAL 9016)
Enclosure dimensions:	108 x 70 x 73.5 mm (Thor 2)
Cable gland:	M 20 x 1.5; with strain relief
Process connection:	by mounting flange, plastic (included in the scope of delivery)
Electrical connection:	0.14 - 2.5 mm², via screw terminals
Protective tube:	**metal,** material CuZn37 (2.0321), Ø 14 mm, NL = 205 mm
Other materials:	mechanical sheet metal parts: galvanised steel capillary tube: copper capillary tube filling: R 507 switching contacts: Ag / Ni (90% / 10%) gold-plated (3 µm)
Protection class:	I (according to EN 60 730-1)
Protection type:	IP 65 (according to EN 60 529)
Standards:	CE conformity, EMC Directive 2014 / 30 / EU, Low Voltage Directive 2014 / 35 / EU
FUNCTION	Contact C - 2: danger of frost / sensor breakage Contact C - 3: normal operation

For further information and accessories see next page...

Dimensional drawing **FST-K**

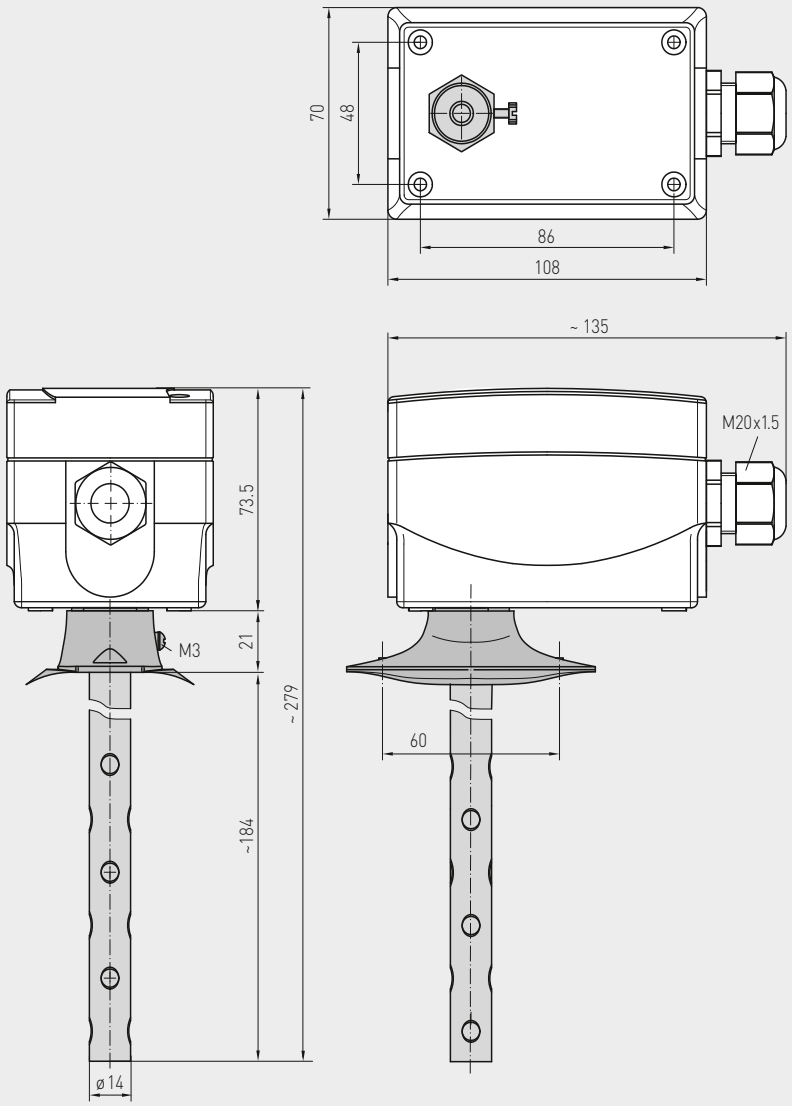

FST-K



FST-K-HR
with manual reset



Dimensional drawing **MF-14-K**

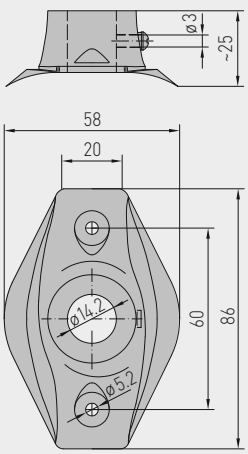

MF-14-K
Mounting flange,
plastic



Duct frost protection thermostat, incl. mounting flange, mechanical, one-step, with switching output

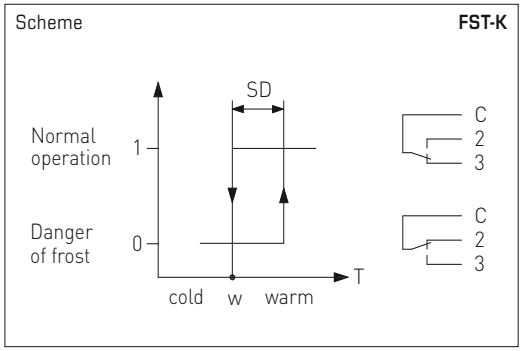

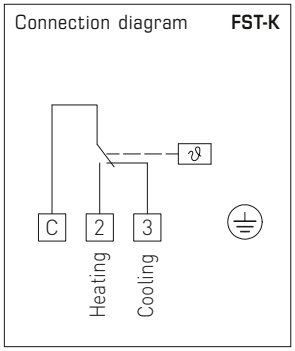

FUNCTION

The switch in the **FST-K** duct frost protection thermostat responds if the temperature across the entire length of the duct tube falls below the preset temperature setpoint (closes contact C - 2). Contact C - 3 opens at the same time and can be used as a signal contact. Resetting occurs automatically (contact closes C - 3) if the temperature rises above the preset setpoint again (on type **FST-K - HR**, resetting must be performed manually using the reset button).

The **FST-K** is "intrinsically safe", i.e., in the event of damage to the capillary tube-membrane system, it automatically switches to the heating function. Contact C - 2 closes and can therefore be used as an operating contact. The air temperature is detected over the entire length of the sensor (capillary tube). The gas-filled (R 507) membrane system and the capillary tube constitute one measuring unit, which is mechanically coupled to the microswitch.

Duct frost protection thermostat, incl. mounting flange, mechanical, one-step, with switching output

FST-K

TW = temperature monitor (automatically switching)

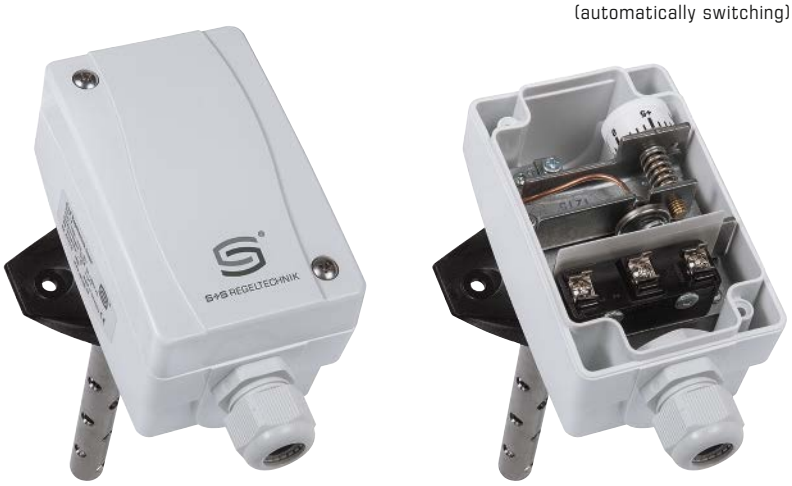

FST-K-HR

TB = temperature limiter (manual rest)



THERMASREG® **FST-K** Duct frost protection thermostat, mechanical					
Type / WG02	**Temperature Range**	**Thermal Operating Difference (fixed) approx.**	**Function**	**Permissible Medium**	**Item No.**
FST-K					**TW**
FST-K	–10…+15 °C	2 K (± 1 K)	TW	air	1102-1064-0100-001
FST-K-HR					**TB**
FST-K HR	–10…+15 °C	2 K (± 1 K)	TB	air	1102-1064-1100-000
Equipment:	FST-K FST-K-**HR**	**TW** = temperature monitor (**automatically switching**) **TB** = temperature limiter (**manual reset**)			

Accessories		
MF-14-K	**Mounting flange**, plastic	7100-0030-2000-000
	For further information see last chapter!	

Two-phase frost protection thermostats, with active and switching output

S+S REGELTECHNIK

Electronic frost protection thermostat / frost monitor **THERM**ASREG® **FS** with continuous and switching output, fully active sensor rod made of copper, additional control input 0-10 V and summation output 0-10 V, optional with or without display. The frost sensor is used for monitoring air conditioning systems, heat exchangers, heating registers and similar equipment preventing frost damage and freezing up. The sensor can detect when the temperature falls below the limit value at the coldest measuring point of the capillary tube. In case of capillary breakage, power failure, or electrical damage at the device, the frost protection monitor's relay automatically switches to frost. Mounting clamps **MK-05-K** are included in the delivery.

FS



TECHNICAL DATA

Power supply:	24 V AC / DC
Load resistance:	R_L > 50 kOhm
Measuring range:	0...+15 °C
Output:	1 x 0-10 V (equivalent to 0...+15 °C) 1 x 0-10 V summation output (frost signal and control voltage) 1 x potential-free changeover contact (24 V), setting range 0...+15 °C
Current consumption:	max. 10 mA at 24 V DC
Accuracy:	typically ± 1 K (at +10 °C)
Hysteresis of switching step:	2 K
Switch-on / start-up time:	< 1 min
Response time:	t_{90} < 5 s
Sensor and capillary:	copper, active over the entire sensor length, min. 25 cm
Temperature: (Sensor / capillary)	–20...+60 °C (capillary tube at a distance > 20 cm away from enclosure)
Ambient temperatures:	maximum operating temperature: +70 °C (+158 °F) minimum operating temperature: w+ min. +2 °C (min. +3.6 °F) storage / transport: –30...+70 °C (–22...+158 °F)
Ambient temperature: (Enclosure)	–15...+50 °C
Enclosure:	plastic, UV-stabilised, material polyamide, 30 % glass-globe reinforced, with quick-locking screws (slotted / Phillips head combination), colour traffic white (similar to RAL 9016), enclosure cover is transparent!
Enclosure dimensions:	126 x 90 x 50 mm (Tyr 2)
Cable gland:	M 16 x 1.5; including strain relief, exchangeable, max. inner diameter 10.4 mm
Process connection:	by mounting clamps **MK-05-K** (included in the scope of delivery)
Electrical connection:	0.14 - 1.5 mm² via terminal screws
Humidity:	< 95 % r. H., non-precipitating air
Protection class:	III (according to EN 60730)
Protection type:	IP 65 (according to EN 60529)
Standards:	CE conformity, electromagnetic compatibility according to EN 61326, EMC directive 2014 / 30 / EU

For further information and accessories see next page...

Dimensional drawing **FS**

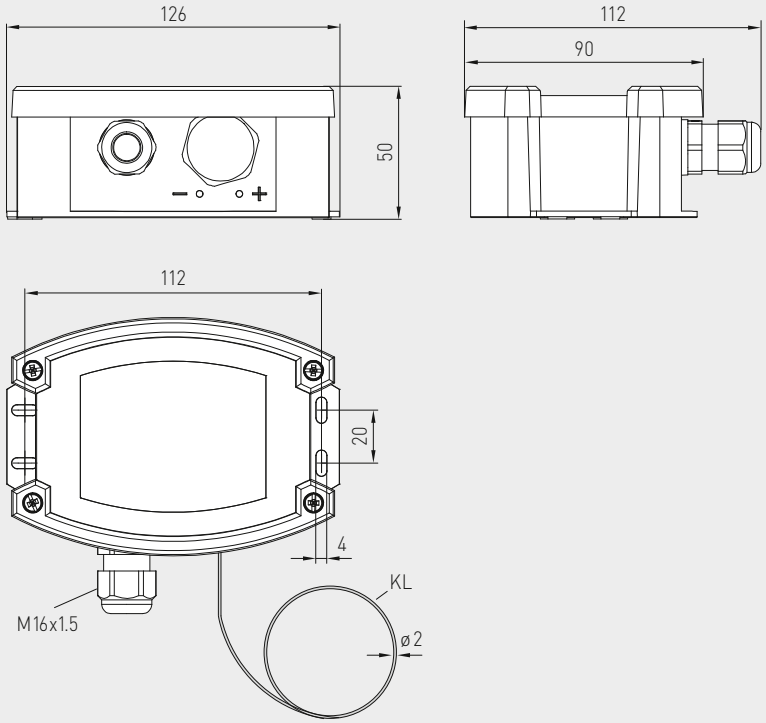

Dimensional drawing **KRD-04**

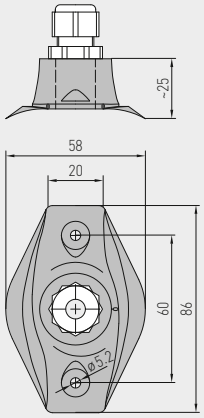

Dimensional drawing **MK-05-K**

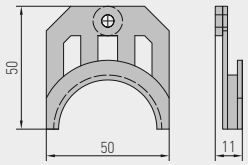

WS-03
Weather and sun protection hood
(optional)



MK-05-K



KRD-04



Two-phase frost protection thermostats, with active and switching output

S+S REGELTECHNIK

FUNCTION

FS



The filling used in the copper capillary tube in the frost protection monitor generates a pressure signal that is proportional to the lowest temperature on the entire capillary tube (but min. 200 mm). This is converted into an electrical signal by a sensor and electronically amplified. The standard signal 0-10 V generated as a result corresponding to 0...+15°C is issued. This voltage is available at the "Temp." terminal. In addition, a 270° control knob can be used to specify a switchpoint for the potential-free changeover contact in the range from 0 °C (left limit stop) to +15 °C (right limit stop). If this switchpoint "FS" is undershot, the relay output switches to the "Frost protection" position (contact "W"= COM connected to contact "Ö"= NC). If the temperature rises by more than 2 K above the set switchpoint "FS", the device switches back to normal operating mode if "automatic mode" is selected. The relay drops out to the initial position (contact "W"= COM connected to contact "S"= NO).

If the "manual operation" operating mode was selected, the relay output does not automatically switch even if the set switchpoint "FS" +2 K is exceeded, but must be manually reset using the "Reset" button or by disconnecting the device from the operating voltage.

In addition, a second voltage output "AV", mapped by 0-10 V, is available. At a voltage of 0 V at the control input "ST-E", the output voltage "AV" is always 0 V if the measured temperature is at least 6 K above the set switchpoint "FS". If the measured temperature falls below the set switchpoint "FS"+6 K, the voltage output "AV" increases in a linear fashion from 0 V to 10 V. The increase here amounts to 1.67 V for every degree Kelvin by which the temperature approaches the preset switchpoint "FS". The output voltage 10 V is therefore issued at "FS"= measured temperature. If you increase "ST-E", the output voltage "AV" is increased by this amount. The "AV" output therefore represents a summation output for the input variables "ST-E" and "Frost signal". In this case, the "Frost signal" variable describes the output behaviour of "AV" at "ST-E" = 0 V. The maximum output voltage is restricted to 10 V.

In case of capillary breakage or electrical damage to the device, the relay output automatically switches to "Frost protection" (contact "W"= COM connected to contact "Ö"= NC).

NOTE

The capillary tube must be securely seated in the socked and must not twist.
A redundant setup to protect critical systems is **absolutely necessary.**

Function **FS**

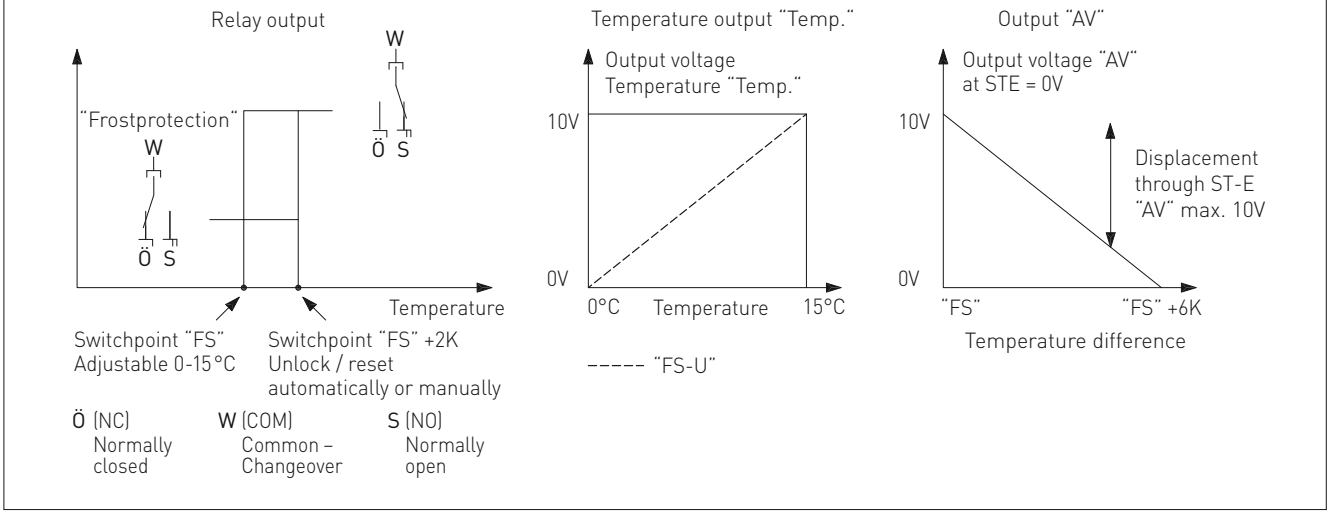

Connecting diagram **FS**

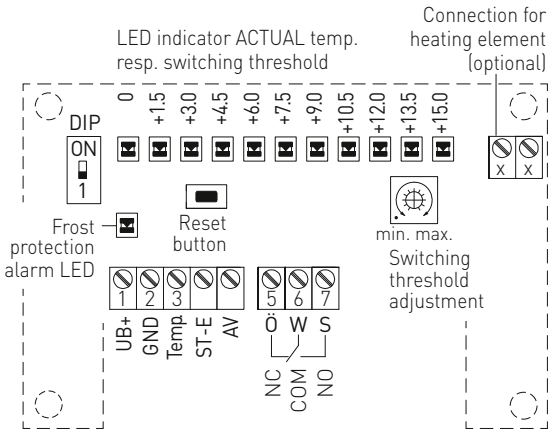

UB+ Operating voltage 24V AC/DC
GND Operating voltage GND
Temp. Output temperature 0-10V = 0...+15°C
ST-E Control input 0-10V
AV Summation output 0-10V (optional)
Ö (NC) Normally Closed
W (COM) Common – changeover (24 V)
S (NO) Normally Open

FS



Reset after frost protection (selectable)	**DIP 1**
manual	**ON**
automatic	OFF

LED indication of ACTUAL temperature or switching threshold in °C											
Measuring Range	**LED 1**	**LED 2**	**LED 3**	**LED 4**	**LED 5**	**LED 6**	**LED 7**	**LED 8**	**LED 9**	**LED 10**	**LED 11**
0...+15 °C	0	+1.5	+3.0	+4.5	+6.0	+7.5	+9.0	+10.5	+12.0	+13.5	+15.0

THERMASREG® FS Two-phase frost protection thermostats

Type / WG02	**Measuring Range**	**Output**	**Sensor Length**	**Item No.**
FS				
FS1-U	0...+15 °C	2 x 0-10 V, 1 x changeover contact	3.0 m	1102-1012-0102-020
FS2-U	0...+15 °C	2 x 0-10 V, 1 x changeover contact	6.0 m	1102-1011-0102-020
FS xx HE				**with heating element**
FS1-U HE	0...+15 °C	2 x 0-10 V, 1 x changeover contact	3.0 m	1102-1012-0112-020
FS2-U HE	0...+15 °C	2 x 0-10 V, 1 x changeover contact	6.0 m	1102-1011-0112-020
Accessories				
KRD-04	Capillary tube gland bracket			7100-0030-7000-000
MK-05-K	Mounting clamps (6 pieces) plastic (included in the scope of delivery)			7100-0034-1000-000
WS-03	Weather and sun protection hood, 200 x 180 x 150 mm, stainless steel **V2A** (1.4301)			7100-0040-6000-000
	For further information see last chapter!			

S+S REGELTECHNIK

Temperature controller for top hat rail installation for remote sensor, with multi-range switching and switching output

Electronic top hat rail thermostat / top hat rail temperature controller **THERM**ASREG® **TET** for installation in distributor boxes or control cabinets, with switching output, multi-range switching, and adjustable hysteresis. It is used for electronic control and monitoring of temperatures by remote sensors in the residential sector (e.g. in connection with floor heating systems), in halls and greenhouses and in the industrial sector. This controller is provided with sensor breakage detection and a switch-off function.

TECHNICAL DATA

Power supply:	24 V DC, +10 % / –15 %; 24 V AC or 230 V AC, +10 % / –15 %, 50 - 60 Hz
Power consumption:	2.5 VA
Control range:	–10...+30 °C; +20...+80 °C; +60...+120 °C, selectable
Input:	Pt1000
Output:	relay as single-pole, potential-free changeover contact (1x)
Switching capacity: (Contact load)	max. 6 A 250 V AC Ue / Ie AC-15, 120 V / 3.5 A, 240 V / 3 A Ue / Ie DC-13, 24 V / 2.5 A EN 60947-5-1, VDE 0435
Operating Difference:	adjustable
Lifetime:	changeover contact mechanical: 5 x 10^6 changeover contact electrical: 1 x 10^5
Ambient conditions:	–20...+60 °C, non-precipitating air
Operating mode indicator:	LED
Enclosure:	plastic, colour black-grey (similar to RAL 7021) and light grey (similar to RAL 7035), width: 45 mm, 3TE
Electrical connection:	0.14 - 2.5 mm^2 via terminal screws
Mounting:	on DIN top hat rail
Humidity:	< 90 % r. H., non-precipitating air
Protection class:	II (according to EN 60 730)
Protection type:	IP 20 at front side (according to EN 60 529)
Standards:	CE conformity, electromagnetic compatibility according to EN 61 326, EMC directive 2014 / 30 / EU, low-voltage directive 2014 / 35 / EU

FUNCTION

The range of interpretation is selected at the lower potentiometer.

Three measuring ranges can be chosen: –10...+30 °C; +20...+80 °C; +60...+120 °C.

The temperature to be monitored is determined by the potentiometer »Setpoint« and the switchpoints (hysteresis) are defined at the potentiometer »Hyst.«

When temperature at the Pt1000 exceeds the value of »Setpoint + Hyst.«, the output relay switches to rest position (switched off).
When temperature falls below »Setpoint - Hyst.«, the output relay is reactivated.

The following conditions result in a drop of the relay to rest position:
Excess temperature, short circuit, or wire breakage at the Pt 1000 sensor, failure of power supply.

Measuring input and power supply have no electric connection i.e. are galvanically isolated.

Dimensional drawing **TET**

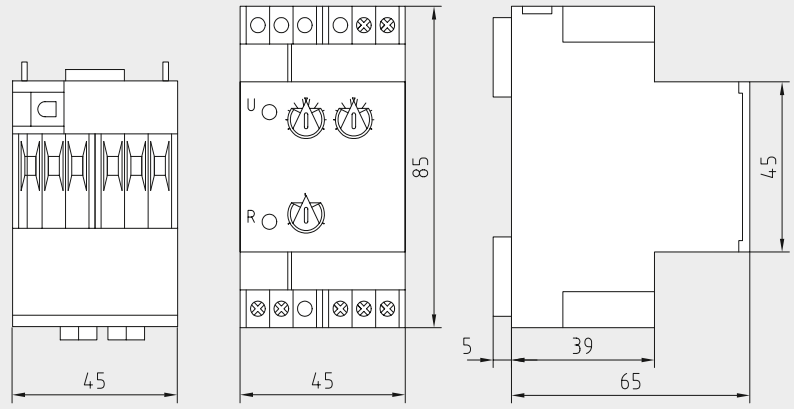

TET



Connecting diagram **TET**

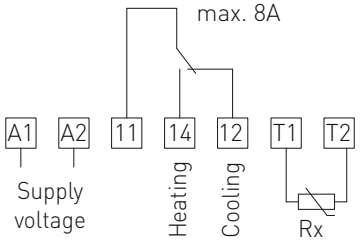

Scheme **TET**

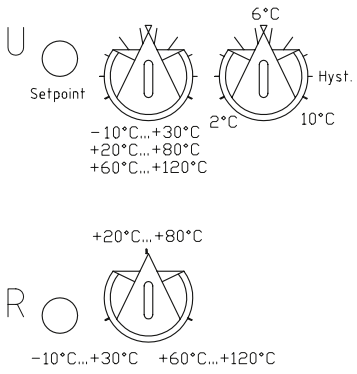

THERMASREG® TET Temperature controller for top hat rail installation

Type / WG01	Supply Voltage	Input Sensor	Output	Item No.
TET				
TET-230VAC	230 V AC, 2,5 VA	Pt1000	1 x changeover contact (potential-free)	1102-6021-0000-000
TET-24VAC	24 V AC, 2,5 VA	Pt1000	1 x changeover contact (potential-free)	1102-6022-0000-000
TET-24VDC	24 V DC, 2,5 VA	Pt1000	1 x changeover contact (potential-free)	1102-6023-0000-000



Humidity

HYGRASGARD® humidity sensors and **HYGR**ASREG® humidity controllers will never let you down when mold and rust formation must be prevented. With an accuracy of 2 % RH, they will always keep you on the safe side. Their application range spans from standard uses in facility automation to highly demanding cleanroom installations.

APPLICATION RANGE

> Refrigeration, air conditioning, ventilation and cleanroom technology
> Food and pharmaceutical industry
> Hospitals, museums, office buildings and greenhouses
> Production facilities, laboratories, computer rooms and control cabinets
> Meteorology



HYGRASGARD® & **HYGR**ASREG®

252 – 333

Room sensors

RFF/RFTF	Room humidity sensor, on-wall	**259**
FSFM/FSFTM	Room humidity sensor, in-wall	**261**
DFF/DFTF	In-ceiling humidity and temperature sensor	**265**
RPFF-SD	Pendulum room humidity sensor	**291**
RPFF/RPFTF	Pendulum room humidity sensor	**295**
RPFF/RPFTF-25	Pendulum room humidity sensor	**299**
VFF/VFTF	Showcase humidity and temperature sensor	**303**

Duct sensors

KFF/KFTF-SD	Duct humidity sensor	**284**
KFF/KFTF	Duct humidity sensor	**284**
KFF/KFTF-20	Duct humidity sensor	**285**
KAVTF	Duct humidity sensor	**289**

Outdoor sensors

AFF/AFTF-SD	Outdoor humidity sensor	**269**
AFF/AFTF	Outdoor humidity sensor	**274**
AFF/AFTF-20	Outdoor humidity sensor	**275**
AFF/AFTF-25	Outdoor humidity sensor	**275**
AAVTF	Outdoor humidity sensor	**279**

Hygrostats

RH-2	Room hygrostat, one-step	**305**
AH-40	Outdoor hygrostat, one-step	**311**
KH-10	Duct hygrostat, one-step	**317**
KH-40	Duct hygrostat, one-step	**319**

Hygrothermostats

RHT	Room hygrothermostat, one-step	**304**
RHT-30	Room hygrothermostat, two-step	**309**
AHT-30	Outdoor hygrothermostat, two-step	**315**
KHT-30	Duct hygrothermostat, two-step	**323**

Condensation control switches, dew point sensors and leakage sensors

KW-SD	Condensation control switch	**326**
KW	Condensation control switch	**327**
TW	Dew point control switch	**331**
LS	Leakage sensor	**333**

Humidity

MADE IN GERMANY

HYGRASGARD® & **HYGR**ASREG®

Multifunctional sensor technology for humidity and temperature

Broad Spectrum

All our humidity measuring transducers are designed to be multifunctional. This reduces the diversity of types while expanding their possible applications. Thanks to microprocessor technology, almost any measuring range can be represented, including custom specifications. Multi-range switching is selectable via DIP switches.

Optimum Precision

These devices are developed and manufactured according to the latest criteria; latest generation digital sensors are installed. All devices are produced at our factory and are calibrated and 100 % checked in our climatic exposure test cabinets. Each sensor is precisely re-adjustable using offset potentiometers. Take advantage of our experience, our development, manufacturing and product know-how and order these products directly from the manufacturer.

Approved Safety

The **HYGR**ASGARD® **3112** with current output (Test No. D8 0910 69871 003) and the **HYGR**ASGARD® **3111** with voltage output (Test No. D8 0910 69871004) are tested and certified according to DIN EN 61326-1:2006 and EN 61326-2-3:2006 by TÜV SÜD.

DIN tested/certified devices

RoHS conforming materials

ESD compliant manufacturing

CE compliance tested by external laboratories

Certified Quality

Our development and production in Nuremberg/Germany is certified by TÜV Thüringen according to DIN EN ISO 9001:2015.

GOST certificates

EAC certified

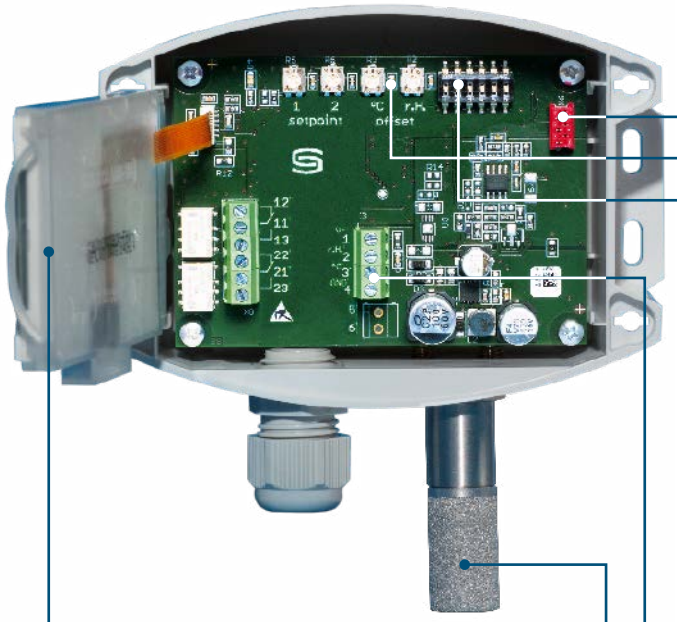

1



Extra-Large Display (70 x 40 mm)

With backlighting as well as display of range violation, sensor breakage, sensor short circuit and physical units

2

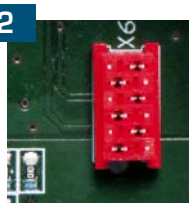

Quality Assurance

Calibration and balancing are done by means of the bus system in climate cabinets

3

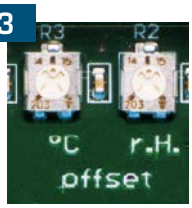

Offset Potentiometer

For fine adjustment (zero point offset) and readjustment upon recalibration

4

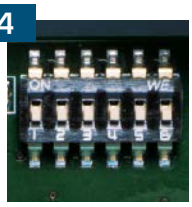

DIP Switches

For multi-range toggling as well as setting of measuring ranges, response times, damping times, units and configuration levels

5

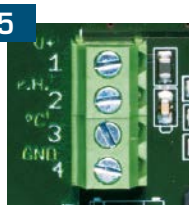

Screw Terminals

Active output signals 0 -10 V, 4...20 mA or switched output

6



Digital Humity & Temperature Probe

Highly precise, longterm stable and temperature compensated



HYGRASGARD® RFF
HYGRASGARD® RFTF

Room humidity and temperature sensors (± 2.0 %), on-wall, calibratable, with active / passive output

S+S REGELTECHNIK

The calibratable room humidity and temperature sensor **HYGR**ASGARD® **RFF/ RFTF** measures the relative humidity and/or temperature of air. It converts the measurands humidity and temperature into standard signals of 0 -10 V or 4...20 mA and is available with or without an optional display (for displaying actual humidity and actual temperature) in an elegant enclosure made of plastic, with snap-on lid, base with 4-hole attachment for installation on vertically or horizontally installed in-wall flush boxes, with predetermined breaking point for on-wall cable entry. The relative humidity (in % r.H.) is the quotient of water vapour partial pressure divided by the saturation vapour pressure at the respective gas temperature.

It is used in non-aggressive dust-free atmospheres in refrigeration, air conditioning, ventilation and clean room technology, in interior rooms such as residential rooms, offices, hotels, technical rooms, meeting rooms and convention centres. These measuring transducers are designed for exact detection of air temperature and humidity. A digital long-term stable sensor is used as a measuring element for humidity and temperature measurement. Fine adjustment by the user is possible.

TECHNICAL DATA

Power supply:	24 V AC (± 20 %) and 15...36 V DC for U variant 15...36 V DC for I variant, depending on working resistance, residual ripple stabilised ± 0.3 V
Working resistance:	R_a (ohm) = (U_b -14 V) / 0.02 A for I variant
Load resistance:	R_L > 5 kOhm for U variant
Power consumption:	< 1.1 VA / 24 V DC ; < 2.2 VA / 24 V AC
Sensors:	**digital humidity sensor** **with integrated temperature sensor,** small hysteresis, high long-term stability
HUMIDITY	
Measuring range, humidity:	0...100 % r. H. (output corresponding to 0 -10 V or 4 ... 20 mA)
Operating range, humidity:	0 ... 95 % r. H. (non-precipitating air)
Deviation, humidity:	typically **± 2.0** % (20...80 % r. H.) at +25 °C, otherwise ± 3.0 %
Output, humidity:	0 -10 V for U variant 4...20 mA for I variant, working resistance < 800 Ω, see load resistance diagram
TEMPERATURE	
Measuring range, temperature:	0...+ 50 °C (output corresponding to 0 -10 V or 4... 20 mA or Ohm value) others upon request!
Operating range, temperature:	0...+ 50 °C
Deviation, temperature:	typically ± 0.2 K at +25 °C
Output, temperature:	0 -10 V or 4 ... 20 mA or Ohm value
Ambient temperature:	storage –25...+50 °C, operation –5...+55 °C
Electrical connection:	2-, 3- or 4-wire connection (see connecting diagram) 0.14 -1.5 mm² via terminal screws
Enclosure:	plastic, material ABS, colour pure white (similar to RAL 9010)
Enclosure dimensions:	85 x 85 x 27 mm (Baldur 1)
Installation:	wall mounting or on in-wall flush box, Ø 55 mm, base with 4-hole for mounting on vertically or horizontally installed in-wall flush boxes for cable entry from the back, with predetermined breaking point for on-wall cable entry from top /bottom in case of plain on-wall installation
Long-term stability:	±1 % per year
Protection class:	III (according to EN 60 730)
Protection type:	IP 30 (according to EN 60 529)
Standards:	CE conformity, according to EMC directive 2014 / 30 / EU, according to EN 61326-1, according to EN 61326-2-3
Optional:	two-line display with illumination, 36 x 15 mm (W x H), for displaying ACTUAL temperature and / or ACTUAL humidity

The two-line display readout switches between the ACTUAL humidity reading in % r. H. and the ACTUAL temperature reading in °C.

Backlighting is installed for better instrument readability.

Display Readout **RFTF**



Dimensional drawing
(Baldur 1)

RFF
RFTF

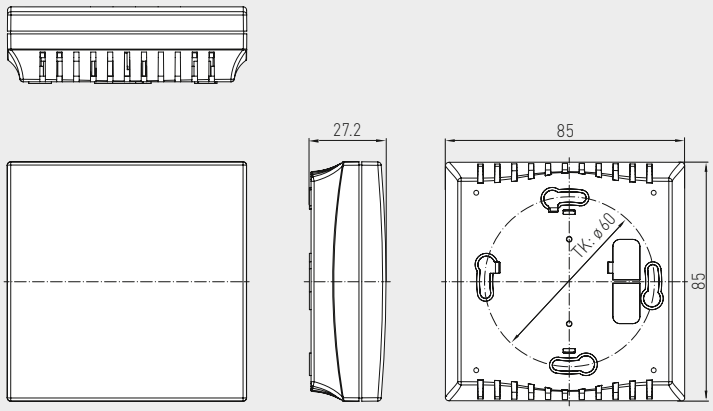

RFF
RFTF



RFF
RFTF
without display

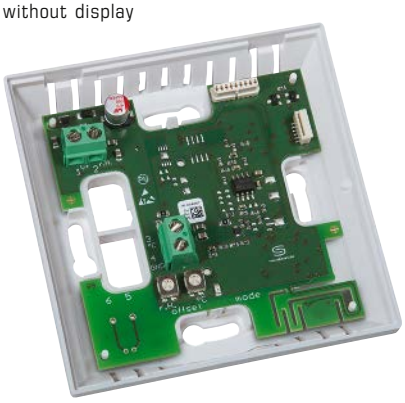

RFF
RFTF
with display

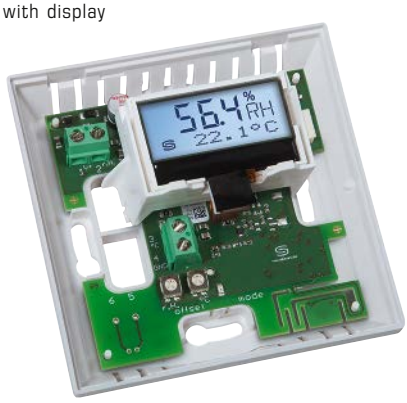

RFF
RFTF
with display



HYGRASGARD® RFF
HYGRASGARD® RFTF

Room humidity and temperature sensors (± 2.0 %), on-wall, calibratable, with active/passive output

S+S REGELTECHNIK

Schematic diagram (Baldur 1) — **RFTF-U-x** / **RFTF-U-x with display**

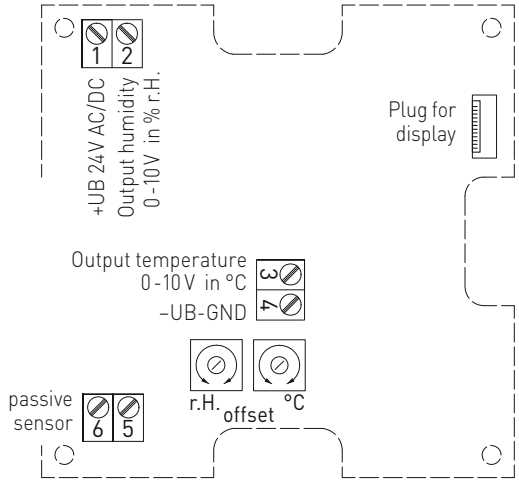

Schematic diagram (Baldur 1) — **RFTF-I-x** / **RFTF-I-x with display**

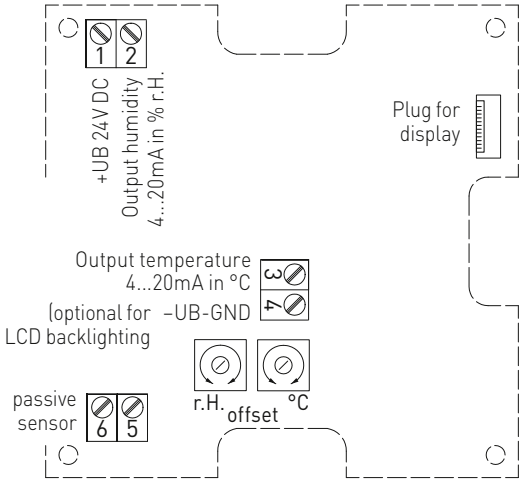

3-wire connection — **RFF-U**

- 1 / 2: +UB 24V AC/DC; Output humidity in % r.H. 0-10V
- 3 / 4: Free; –UB-GND

2- or 3-wire connection * — **RFF-I (Transmitter)**

- 1 / 2: +UB 24V DC; Output humidity in % r.H. 4...20mA
- 3 / 4: Free; –UB-GND (optional for backlighting)

4- or 6-wire connection — **RFTF-U (passive temperature sensor)**

- 1 / 2: +UB 24V AC/DC; Output humidity in % r.H. 0-10V
- 3 / 4: Output temperature in °C 0-10V; –UB-GND
- 5 / 6: Passive element e.g. Pt1000, Ni1000, LMZ235Z

4-wire connection — **RFTF-U with display**

- 1 / 2: +UB 24V AC/DC; Output humidity in % r.H. 0-10V
- 3 / 4: Output temperature in °C 0-10V; –UB-GND

3- or 4-wire connection ** — **RFTF-I (Transmitter)**

- 1 / 2: +UB 24V DC; Output humidity in % r.H. 4...20mA
- 3 / 4: Output temperature in °C 4...20mA; –UB-GND (optional for backlighting)

4- or 6-wire connection — **RFTF-I (passive temperature sensor)**

- 1 / 2: +UB 24V DC; Output humidity in % r.H. 4...20mA
- 3 / 4: Output temperature in °C 4...20mA; –UB-GND (optional for backlighting)
- 5 / 6: Passive element e.g. Pt1000, Ni1000, LMZ235Z

Load resistance diagram 4...20 mA — **RFF/ RFTF**

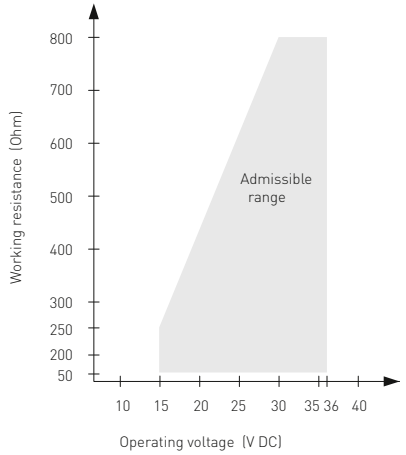

Connection*:
2-wire connection for devices with / without display (not illuminated)
3-wire connection for devices with illuminated display

Connection**:
3-wire connection for devices with / without display (not illuminated)
4-wire connection for devices with illuminated display

At the **I variant** the humidity path must be connected!

Humidity table
MR: 0 ...100 % r. H.

% r.H.	U_A in V	I_A in mA	% r.H.	U_A in V	I_A in mA
0	0	4.0	**50**	5.0	12.0
5	0.5	4.8	**55**	5.5	12.8
10	1.0	5.6	**60**	6.0	13.6
15	1.5	6.4	**65**	6.5	14.4
20	2.0	7.2	**70**	7.0	15.2
25	2.5	8.0	**75**	7.5	16.0
30	3.0	8.8	**80**	8.0	16.8
35	3.5	9.6	**85**	8.5	17.6
40	4.0	10.4	**90**	9.0	18.4
45	4.5	11.2	**95**	9.5	19.2
Continued at the right ...			**100**	10.0	20.0

Temperature table
MR: 0 ...+50 °C

°C	U_A in V	I_A in mA
0	0.0	4.0
5	1.0	5.6
10	2.0	7.2
15	3.0	8.8
20	4.0	10.4
25	5.0	12.0
30	6.0	13.6
35	7.0	15.2
40	8.0	16.8
45	9.0	18.4
50	10.0	20.0

HYGRASGARD® RFF Room humidity sensors
HYGRASGARD® RFTF Room humidity and temperature sensors

Type / WG01	Measuring Range / Readout Humidity	Temperature	Output Humidity	Temperature	Display	Item No. (Baldur 1)
RFF						**(active)**
RFF-I	0...100 % r. H.	–	4...20 mA	–		1201-41A2-0000-000
RFF-I DISPLAY	0...100 % r. H.	–	4...20 mA	–	■	1201-41A2-0200-000
RFF-U	0...100 % r. H.	–	0-10 V	–		1201-41A1-0000-000
RFF-U DISPLAY	0...100 % r. H.	–	0-10 V	–	■	1201-41A1-0200-000
RFTF						**(active)**
RFTF-I	0...100 % r. H.	0...+50 °C	4...20 mA	4...20 mA		1201-41A2-1000-000
RFTF-I DISPLAY	0...100 % r. H.	0...+50 °C	4...20 mA	4...20 mA	■	1201-41A2-1200-000
RFTF-U	0...100 % r. H.	0...+50 °C	0-10 V	0-10 V		1201-41A1-1000-000
RFTF-U DISPLAY	0...100 % r. H.	0...+50 °C	0-10 V	0-10 V	■	1201-41A1-1200-000

HYGRASGARD® RFTF-U xx Room humidity and temperature sensors

Type / WG01	Measuring Range / Readout Humidity	Temperature	Output Humidity	Temperature	Item No. (Baldur 1)
RFTF-U xx	**Pt, Ni, LM235Z**				**(active / passive)**
RFTF-U PT100	0...100 % r. H.	0...+50 °C	0-10 V	0-10 V + Pt100	1201-41A1-2001-000
RFTF-U PT1000	0...100 % r. H.	0...+50 °C	0-10 V	0-10 V + Pt1000	1201-41A1-2005-000
RFTF-U NI1000	0...100 % r. H.	0...+50 °C	0-10 V	0-10 V + Ni1000	1201-41A1-2009-000
RFTF-U NITK	0...100 % r. H.	0...+50 °C	0-10 V	0-10 V + Ni1000TK5000	1201-41A1-2010-000
RFTF-U LM235Z	0...100 % r. H.	0...+50 °C	0-10 V	0-10 V + LM235Z, 10mV / K	1201-41A1-2021-000
RFTF-U xx	**NTC**				**(active / passive)**
RFTF-U NTC1,8K	0...100 % r. H.	0...+50 °C	0-10 V	0-10 V + NTC 1,8 kOhm	1201-41A1-2012-000
RFTF-U NTC10K	0...100 % r. H.	0...+50 °C	0-10 V	0-10 V + NTC 10 kOhm	1201-41A1-2015-000
RFTF-U NTC20K	0...100 % r. H.	0...+50 °C	0-10 V	0-10 V + NTC 20 kOhm	1201-41A1-2016-000
Extra charge:	Two-line **display** with illumination				

HYGRASGARD® FSFM
HYGRASGARD® FSFTM

Room humidity and temperature sensor or measuring transducer, in-wall in the panel switch programme, with active output

NEW

S+S REGELTECHNIK

The room sensor **HYGR**ASGARD® **FSFM / FSFTM** in the in-wall enclosure is used for measuring the relative humidity and temperature of the air. It converts the measured values into a standard signal of 0-10 V.

A digital, long-term stable sensor is used for humidity and temperature measurement. Relative humidity [% r.H.] is the quotient of water vapour partial pressure divided by the saturation vapour pressure at the respective gas temperature.

The in-wall sensor is mounted in high-quality panel switch programmes, ideally of the brands Gira, Berker, Merten, Jung, Siemens or Busch-Jaeger (using in-wall adapters) either individually or in combination with light switches, socket outlets, etc.

It is used in non-aggressive, dust-free environments, in refrigeration, air conditioning and clean room technology, and in interior rooms, such as living rooms, offices, hotels, etc

Mounting diagram **in-wall**

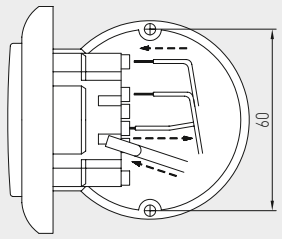

TECHNICAL DATA

Power supply:	24 V AC / DC (± 10 %)
Power consumption:	< 1.1 W / 24 V DC; < 2.2 VA / 24 V AC
HUMIDITY	
Sensor:	**digital humidity sensor, with integrated temperature sensor,** low hysteresis, high long-term stability
Long-term stability:	± 1 % per year
Measuring range, humidity::	0...100 % r. H.
Operating range, humidity:	0...95 % r. H. (non-precipitating air)
Deviation, humidity:	typically ± 3.0 % (20...80 % r. H.) at +25 °C, otherwise ± 5.0 %
Output, humidity:	0-10 V
TEMPERATURE	
Measuring range:	0...+50 °C
Deviation, temperature:	typically ± 0.8 K at +25 °C
Output, temperature:	0-10 V

Mounting:	in-wall flush box Ø 55 mm
Electrical connection:	0.14 - 1.5 mm², using plug terminals
Ambient temperature:	Storage –35...+85 °C; Operation 0...+50 °C
Permitted humidity:	max. 90 % r.H., non-precipitating air
Medium:	clean air and other non-aggressive, non-combustible gases
Protection class:	III (according to EN 60 730)
Protection type:	IP 20 (according to 60 529)
Standards:	CE-conformity, electromagnetic compatibility according to EN 61 326, EMC Directive 2014 / 30 / EU
SWITCH PROGRAMME	
Manufacturer:	GIRA System 55 (other switch programmes, manufacturers, colours as well as prices available upon request)
Enclosure:	plastic, the standard colour is pure glossy white (similar to RAL 9010) (other colours are available upon request with colour variants depending on the respective light switch programme)

Connection diagram **FSFM**

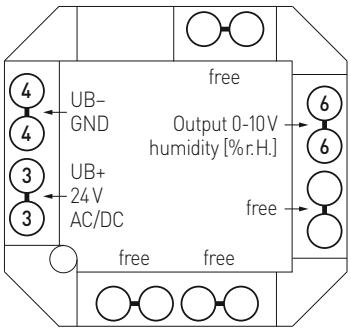

Connection diagram **FSFTM**

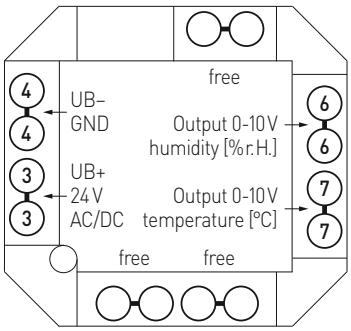

Dimensional drawing

FSFM
FSFTM

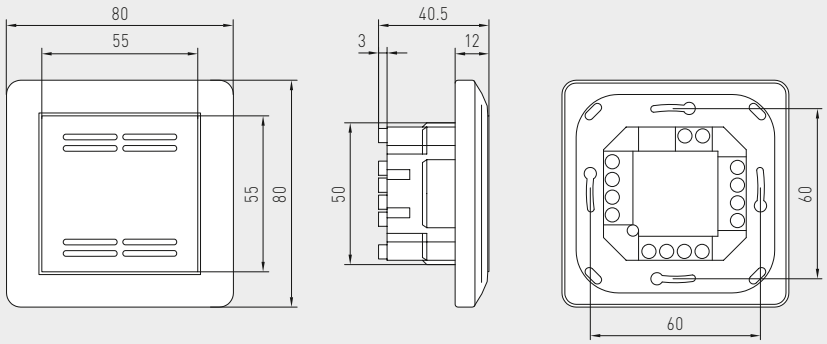

FSFM
FSFTM



Humidity table
MR: 0...100 % r. H.

% r.H.	U_A [V]	% r.H.	U_A [V]
0	0	**50**	5.0
5	0.5	**55**	5.5
10	1.0	**60**	6.0
15	1.5	**65**	6.5
20	2.0	**70**	7.0
25	2.5	**75**	7.5
30	3.0	**80**	8.0
35	3.5	**85**	8.5
40	4.0	**90**	9.0
45	4.5	**95**	9.5
Continued to the right ...		**100**	10.0

Temperature table
MR: 0...+50 °C

°C	U_A [V]
0	0.0
5	1.0
10	2.0
15	3.0
20	4.0
25	5.0
30	6.0
35	7.0
40	8.0
45	9.0
50	10.0

HYGRASGARD® FSFM Room humidity sensor or measuring transducer, in-wall
HYGRASGARD® FSFTM Room humidity and temperature sensor or measuring transducer, in-wall

Type / WG02	Measuring Range Humidity	Temperature	Output Humidity	Temperature	Item No.
FSFM					
FSFM-U	0...100 % r. H.	–	0-10 V	–	1201-9121-0000-162
FSFTM					
FSFTM-U	0...100 % r. H.	0...+50 °C	0-10 V	0-10 V	1201-9121-1000-162

HYGRASGARD® DFF
HYGRASGARD® DFTF

In-ceiling humidity and temperature sensors (± 2.0 %), calibratable, with multi-range switching and active output

S+S REGELTECHNIK

The calibratable humidity and temperature sensor **HYGR**ASGARD® **DFF / DFTF** measures the relative humidity and temperature of air. It converts the measurands humidity and temperature into a standard signal of 0 - 10 V or 4...20 mA, and is available with / without an optional display.
It is equipped with four switchable temperature ranges. Relative humidity (in % r.H.) is the quotient of water vapour partial pressure divided by the saturation vapour pressure at the respective gas temperature. The measuring transducers are designed for exact detection of temperature and humidity. A digital, long-term stable sensor is used as a measuring element for humidity and temperature measurement. Fine adjustment by the user is possible.
The ceiling-installed sensor is used in non-aggressive, dust-free environments and is used for installation in suspended ceilings in corridors, offices, as well as in residential and commercial buildings. The connecting head is pluggable for quick, easy mounting.
The measuring transducer is accommodated in a separate enclosure.

DFF
DFTF



TECHNICAL DATA

Power supply:	24 V AC (± 20 %) and 15...36 V DC for U variant 15...36 V DC for I variant, depending on working resistance, residual ripple stabilised ± 0.3 V
Working resistance:	R_a (Ohm) = (U_b -14 V) / 0.02 A for I variant
Load resistance:	R_L > 5 kOhm for U variant
Power consumption:	< 1.1 VA / 24 V DC; < 2.2 VA / 24 V AC
Sensors:	**digital humidity sensor with integrated temperature sensor,** low hysteresis, high long-term stability
HUMIDITY	
Measuring range, humidity:	0...100 % r.H. (output corresponding to 0 - 10 V or 4...20 mA)
Operating range, humidity:	0..95 % r. H. (without formation of dew)
Deviation in humidity:	typically **± 2.0** % (20...80 % r. H.) at +25 °C, otherwise ± 3.0 %
Output, humidity:	0 - 10 V for U variant 4...20 mA for I variant, see load resistance diagram
TEMPERATURE	
Measuring range, temperature:	**multi-range switching with** **4 switchable measuring ranges** (see table) –35...+35 °C; –35...+75 °C; 0...+50 °C; 0...+80 °C (output corresponding to 0 - 10 V or 4...20 mA)
Deviation temperature:	typically ± 0.2 K at +25 °C
Output, temperature:	0 - 10 V or 4...20 mA
Ambient temperature:	storage –5...+60 °C; operation –5...+60 °C
Long-term stability:	± 1 % per year
Enclosure:	plastic, UV-stabilised, material polyamide, 30 % glass-globe reinforced, with quick-locking screws (slotted / Phillips head combination), colour traffic white (similar to RAL 9016), enclosure cover for display is transparent!
Enclosure dimensions:	72 x 64 x 37.8 mm (Tyr 1 without display) 72 x 64 x 43.3 mm (Tyr 1 with display)
Cable gland:	M 16 x 1.5 ; including strain relief, exchangeable, max. inner diameter 10.4 mm
Electrical connection:	2-, 3- or 4-wire (see connecting diagram), 0.14 - 1.5 mm², via terminal screws
Connecting cable:	PVC, LiYY, 4 x 0.14 mm², cable length (KL) = approx. 2 m
Connecting head:	made of plastic, material polycarbonate (PC), colour white, **pluggable**, Ø = approx. 35 mm, H = approx. 29 mm, with metal sinter filter made of stainless steel **V4A** (1.4404)
Mounting (sensor):	in the suspended ceiling, ceiling cut-out Ø = 30 mm, cover Ø = < 35 mm
Protection class:	III (according to EN 60 730)
Protection type:	IP 65 (according to EN 60 529) enclosure only! IP 30 (according to EN 60 529) sensor in the built-in state
Standards:	CE conformity according to EMC Directive 2014 / 30 / EU, according to EN 61326-1, according to EN 61326-2-3
Optional:	two-line **display with illumination**, cutout approx. 36 x 15 mm (W x H), to display the ACTUAL temperature and / or ACTUAL humidity

DFF
DFTF
Connecting head, pluggable



Dimensional drawing

DFF
DFTF

without display

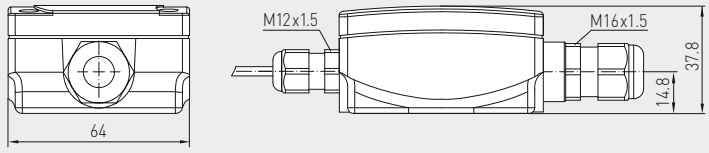

with display

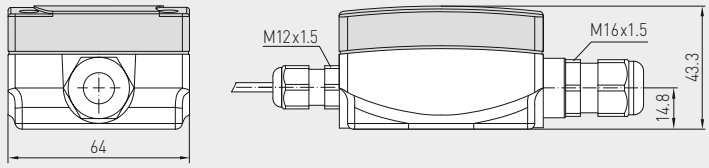

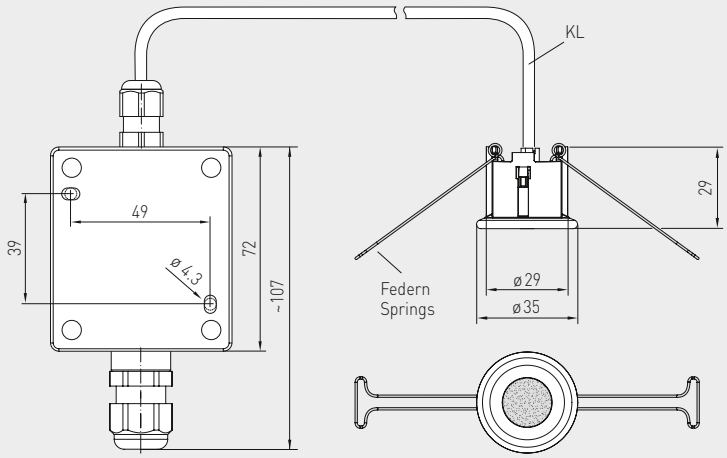

DFF
DFTF
with display



Temperature table
MR: –35...+75 °C

°C	U_A in V	I_A in mA
-35	0.0	4.0
-30	0.5	4.7
-25	0.9	5.5
-20	1.4	6.2
-15	1.8	6.9
-10	2.3	7.6
-5	2.7	8.4
0	3.2	9.1
5	3.6	9.8
10	4.1	10.5
15	4.5	11.3
20	5.0	12.0
25	5.5	12.7
30	5.9	13.5
35	6.4	14.2
40	6.8	14.9
45	7.3	15.6
50	7.7	16.4
55	8.2	17.1
60	8.6	17.8
65	9.1	18.5
70	9.5	19.2
75	10.0	20.0

Temperature table
MR: –35...+35 °C

°C	U_A in V	I_A in mA
-35	0.0	4.0
-30	0.7	5.1
-25	1.4	6.3
-20	2.1	7.4
-15	2.9	8.6
-10	3.6	9.7
-5	4.3	10.9
0	5.0	12.0
5	5.7	13.1
10	6.4	14.3
15	7.1	15.4
20	7.9	16.6
25	8.6	17.7
30	9.3	18.9
35	10.0	20.0

Temperature table
MR: 0...+50 °C

°C	U_A in V	I_A in mA
0	0.0	4.0
5	1.0	5.6
10	2.0	7.2
15	3.0	8.8
20	4.0	10.4
25	5.0	12.0
30	6.0	13.6
35	7.0	15.2
40	8.0	16.8
45	9.0	18.4
50	10.0	20.0

Temperature table
MR: 0...+80 °C

°C	U_A in V	I_A in mA
0	0.0	4.0
5	0.6	5.0
10	1.3	6.0
15	1.9	7.0
20	2.5	8.0
25	3.1	9.0
30	3.8	10.0
35	4.4	11.0
40	5.0	12.0
45	5.6	13.0
50	6.3	14.0
55	6.9	15.0
60	7.5	16.0
65	8.1	17.0
70	8.8	18.0
75	9.4	19.0
80	10.0	20.0

Humidity table
MR: 0...100 % r. H.

% r.H.	U_A in V	I_A in mA
0	0.0	4.0
5	0.5	4.8
10	1.0	5.6
15	1.5	6.4
20	2.0	7.2
25	2.5	8.0
30	3.0	8.8
35	3.5	9.6
40	4.0	10.4
45	4.5	11.2
50	5.0	12.0
55	5.5	12.8
60	6.0	13.6
65	6.5	14.4
70	7.0	15.2
75	7.5	16.0
80	8.0	16.8
85	8.5	17.6
90	9.0	18.4
95	9.5	19.2
100	10.0	20.0

HYGRASGARD® DFF
HYGRASGARD® DFTF

In-ceiling humidity and temperature sensors (± 2.0 %), calibratable, with multi-range switching and active output

S+S REGELTECHNIK

Schematic diagram **DFTF-U** with display

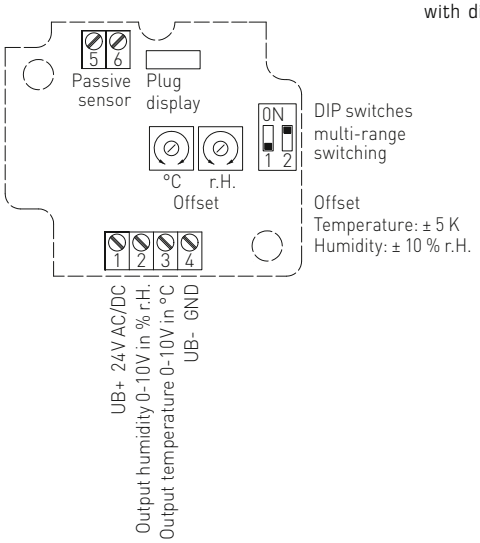

Schematic diagram** **DFTF-I** with display

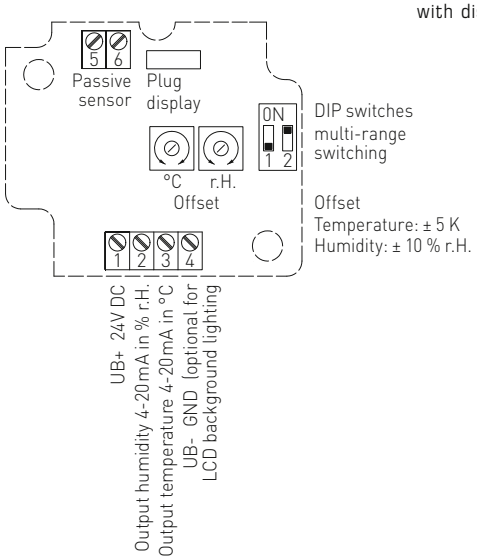

3-wire connection **DFF-U**

1	+UB 24V AC/DC
2	Output humidity in % r.H. 0-10V
3	Free
4	–UB-GND

2- or 3-wire connection* **DFF-I (Transmitter)**

1	+UB 24V DC
2	Output humidity in % r.H. 4-20mA
3	Free
4	–UB-GND (optional for backlighting)

4-wire connection **DFTF-U**

1	+UB 24V AC/DC
2	Output humidity in % r.H. 0-10V
3	Output temperature in °C 0-10V
4	–UB-GND

3- or 4-wire connection** **DFTF-I (Transmitter)**

1	+UB 24V DC
2	Output humidity in % r.H. 4-20mA
3	Output temperature in °C 4-20mA
4	–UB-GND (optional for backlighting)

Temperature measuring ranges (adjustable)	**DIP 1**	**DIP 2**
–35…+75 °C	**ON**	**ON**
–35…+35 °C	OFF	OFF
0…+50 °C (default)	OFF	**ON**
0…+80 °C	**ON**	OFF

Load resistance diagram 4…20 mA **DFF DFTF**

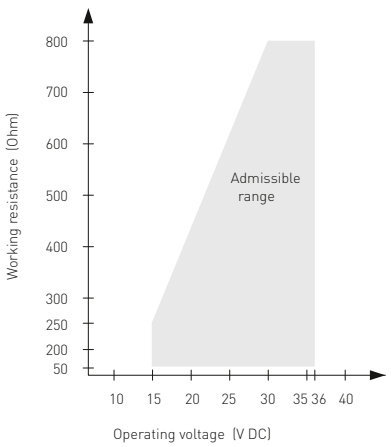

Connection*:

2-wire connection for devices with / without display (not illuminated)

3-wire connection for devices with illuminated display

Connection**:

3-wire connection for devices with / without display (not illuminated)

4-wire connection for devices with illuminated display

For the **I variant** the humidity path must be connected!

DFF
DFTF
with display



HYGRASGARD® **DFF**	In-ceiling humidity sensors (± 2.0 %), *Premium*
HYGRASGARD® **DFTF**	In-ceiling humidity and temperature sensors (± 2. 0 %), *Premium*

Type / WG01	**Measuring Range / Readout** Humidity	Temperature	**Output** Humidity	Temperature	**Display**	**Item No.**
DFF-I						**I-variant**
DFF-I	0...100 % r. H.	–	4...20 mA	–		1201-6132-0000-100
DFF-I DISPLAY	0...100 % r. H.	–	4...20 mA	–	■	1201-6132-0200-100
DFF-U						**U-variant**
DFF-U	0...100 % r. H.	–	0-10 V	–		1201-6131-0000-100
DFF-U DISPLAY	0...100 % r. H.	–	0-10 V	–	■	1201-6131-0200-100
DFTF-I						**I-variant**
DFTF-I	0...100 % r. H.	–35...+75 °C –35...+35 °C 0...+50 °C 0...+80 °C	4...20 mA	4...20 mA		1201-6132-1000-100
DFTF-I DISPLAY	0...100 % r. H.	(4x as above)	4...20 mA	4...20 mA	■	1201-6132-1200-100
DFTF-U						**U-variant**
DFTF-U	0...100 % r. H.	–35...+75 °C –35...+35 °C 0...+50 °C 0...+80 °C	0-10 V	0-10 V		1201-6131-1000-100
DFTF-U DISPLAY	0...100 % r. H.	(4x as above)	0-10 V	0-10 V	■	1201-6131-1200-100

HYGRASGARD® AFF-SD
HYGRASGARD® AFTF-SD

On-wall humidity and temperature sensors (± 2.0 %), compact form, calibratable, with multi-range switching and active output

S+S REGELTECHNIK

The calibratable outdoor humidity / temperature sensors **HYGR**ASGARD® **AFF-SD / AFTF-SD** measure the relative humidity and / or temperature of air. They convert the measurands into standard signals of 0 -10 V or 4...20 mA and are available with or without an optional display. Terminal box enclosure made of impact-resistant plastic with enclosure cover with quick-locking screws. They have four switchable temperature ranges and are applied in non-aggressive dust-free atmospheres in refrigeration, air conditioning, ventilation and clean room technology. Relative humidity (in % r. H.) is the quotient of water vapour partial pressure divided by the saturation vapour pressure at the respective gas temperature. These measuring transducers are designed for precise detection of humidity. A digital long-term stable sensor is used as a measuring element for humidity measurement. Fine adjustment by the user is possible.

AFF-SD
AFTF-SD
compact form



SF-M
Metal sinter filter (optional)



TECHNICAL DATA

Power supply:	24 V AC (± 20 %); 15...36 V DC for U variant 15...36 V DC for I variant, depending on working resistance, residual ripple stabilised ± 0.3 V
Working resistance:	R_a (ohm) = (U_b -14 V) / 0.02 A for I variant
Load resistance:	R_L > 5 kOhm for U variant
Power consumption:	< 1.1 VA / 24 V DC; < 2.2 VA / 24 V AC
Sensors:	**digital humidity sensor with integrated temperature sensor,** low hysteresis, high long-term stability
Sensor protection:	**plastic** sinter filter, Ø 16 mm, L = 35 mm, exchangeable (optional **metal** sinter filter, Ø 16 mm, L = 32 mm)
HUMIDITY	
Measuring range, humidity:	0...100 % r. H. (output corresponding to 0 -10 V or 4...20 mA)
Operating range, humidity:	0...95 % r. H. (without dew formation)
Deviation, humidity:	typically **± 2.0** % (20...80 % r. H.) at +25 °C, otherwise ± 3.0 %
Output, humidity:	0 -10 V for U variant 4...20 mA for I variant, see load resistance diagram
TEMPERATURE	
Measuring range, temperature:	**multi-range switching** (see table) **–35...+35 °C; –35...+75 °C; 0...+50 °C; 0...+80 °C** (output corresponding to 0 -10 V or 4 ... 20 mA)
Deviation, temperature:	typically ± 0.6 K at +25 °C
Output, temperature:	0 -10 V or 4 ... 20 mA or Ohm value
Ambient temperature:	storage –35...+85 °C, operation – 30...+70 °C, non-precipitating
Electrical connection:	2-, 3-, or 4-wire connection (see connecting diagram), 0.14 - 1.5 mm², via terminal screws
Enclosure:	plastic, UV-stabilised, material polyamide, 30 % glass-globe reinforced, with quick-locking screws (slotted / Phillips head combination), colour traffic white (similar to RAL 9016), enclosure cover for display is transparent!
Enclosure dimensions:	72 x 64 x 37.8 mm (Tyr 1 without display) 72 x 64 x 43.3 mm (Tyr 1 with display)
Cable gland:	M 16 x 1.5, including strain relief, exchangeable, max. inner diameter 10.4 mm
Protective tube:	**stainless steel V2A** (1.4301), Ø = 16 mm, NL = 55 mm
Process connection:	by screws
Long-term stability:	± 1 % per year
Protection class:	III (according to EN 60 730)
Protection type:	IP 65 (according to EN 60 529)
Standards:	CE conformity, according to EMC directive 2014 / 30 / EU, according to EN 61326-1, according to EN 61326-2-3
Optional:	two-line **display with** illumination, cutout approx. 36 x 15 mm (W x H), for displaying ACTUAL temperature and / or ACTUAL humidity
ACCESSORIES	see last chapter

HYGRASGARD® AFF-SD
HYGRASGARD® AFTF-SD

On-wall humidity and temperature sensors (± 2.0 %), compact form, calibratable, with multi-range switching and active output

Dimensional drawing

AFF-SD
AFTF-SD

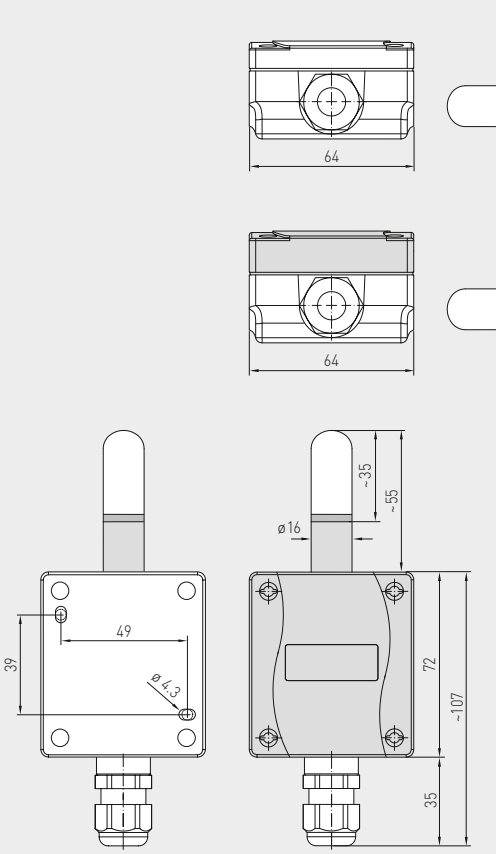

with **plastic** sinter filter (standard)

AFF-SD
AFTF-SD
compact form with display



SF-M
Metal sinter filter (optional)



Temperature table
MR: –35...+75 °C

°C	U_A in V	I_A in mA
–35	0.0	4.0
– 30	0.5	4.7
– 25	0.9	5.5
– 20	1.4	6.2
– 15	1.8	6.9
– 10	2.3	7.6
– 5	2.7	8.4
0	3.2	9.1
5	3.6	9.8
10	4.1	10.5
15	4.5	11.3
20	5.0	12.0
25	5.5	12.7
30	5.9	13.5
35	6.4	14.2
40	6.8	14.9
45	7.3	15.6
50	7.7	16.4
55	8.2	17.1
60	8.6	17.8
65	9.1	18.5
70	9.5	19.2
75	10.0	20.0

Temperature table
MR: –35...+35 °C

°C	U_A in V	I_A in mA
–35	0.0	4.0
– 30	0.7	5.1
– 25	1.4	6.3
– 20	2.1	7.4
– 15	2.9	8.6
– 10	3.6	9.7
– 5	4.3	10.9
0	5.0	12.0
5	5.7	13.1
10	6.4	14.3
15	7.1	15.4
20	7.9	16.6
25	8.6	17.7
30	9.3	18.9
35	10.0	20.0

Temperature table
MR: 0...+50 °C

°C	U_A in V	I_A in mA
0	0.0	4.0
5	1.0	5.6
10	2.0	7.2
15	3.0	8.8
20	4.0	10.4
25	5.0	12.0
30	6.0	13.6
35	7.0	15.2
40	8.0	16.8
45	9.0	18.4
50	10.0	20.0

Temperature table
MR: 0...+80 °C

°C	U_A in V	I_A in mA
0	0.0	4.0
5	0.6	5.0
10	1.3	6.0
15	1.9	7.0
20	2.5	8.0
25	3.1	9.0
30	3.8	10.0
35	4.4	11.0
40	5.0	12.0
45	5.6	13.0
50	6.3	14.0
55	6.9	15.0
60	7.5	16.0
65	8.1	17.0
70	8.8	18.0
75	9.4	19.0
80	10.0	20.0

Humidity table
MR: 0...100 % r. H.

% r.H.	U_A in V	I_A in mA
0	0.0	4.0
5	0.5	4.8
10	1.0	5.6
15	1.5	6.4
20	2.0	7.2
25	2.5	8.0
30	3.0	8.8
35	3.5	9.6
40	4.0	10.4
45	4.5	11.2
50	5.0	12.0
55	5.5	12.8
60	6.0	13.6
65	6.5	14.4
70	7.0	15.2
75	7.5	16.0
80	8.0	16.8
85	8.5	17.6
90	9.0	18.4
95	9.5	19.2
100	10.0	20.0

HYGRASGARD® AFF-SD
HYGRASGARD® AFTF-SD

On-wall humidity and temperature sensors (± 2.0 %), compact form, calibratable, with multi-range switching and active output

S+S REGELTECHNIK

Schematic diagram — **AFTF-SD-U with display**

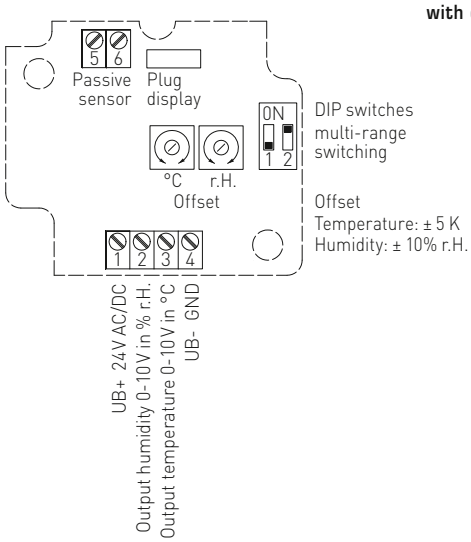

Schematic diagram** — **AFTF-SD-I with display**

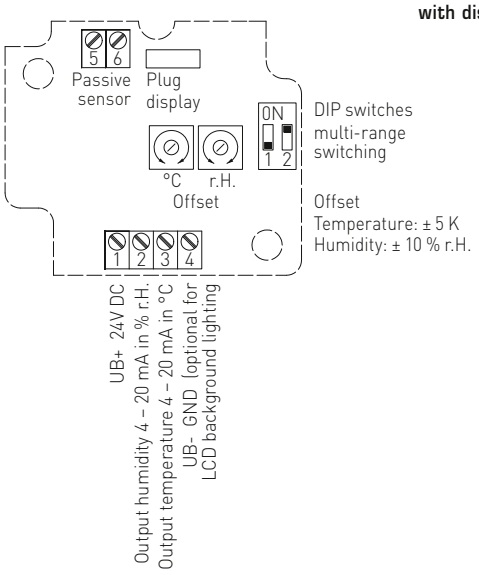

3-wire connection — **AFF-SD-U**

1	+UB 24V AC/DC
2	Output humidity in % r.H. 0-10V
3	Free
4	-UB-GND

2- or 3-wire connection* — **AFF-SD-I (Transmitter)**

1	+UB 24V DC
2	Output humidity in % r.H. 4-20mA
3	Free
4	-UB-GND (optional for backlighting)

4-wire connection — **AFTF-SD-U**

1	+UB 24V AC/DC
2	Output humidity in % r.H. 0-10V
3	Output temperature in °C 0-10V
4	-UB-GND

3- or 4-wire connection** — **AFTF-SD-I (Transmitter)**

1	+UB 24V DC
2	Output humidity in % r.H. 4-20mA
3	Output temperature in °C 4-20mA
4	-UB-GND (optional for backlighting)

Temperature measuring ranges (adjustable)	**DIP 1**	**DIP 2**
–35…+75 °C	**ON**	**ON**
–35…+35 °C	OFF	OFF
0…+50 °C (default)	OFF	**ON**
0…+80 °C	**ON**	OFF

Load resistance diagram — **AFF-SD / AFTF-SD** 4…20 mA

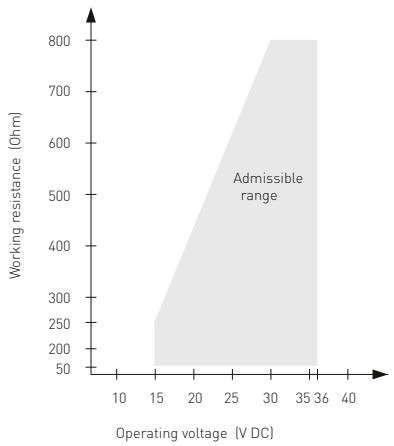

Connection*:
2-wire connection for devices with / without display (not illuminated)
3-wire connection for devices with illuminated display

Connection**:
3-wire connection for devices with / without display (not illuminated)
4-wire connection for devices with illuminated display

For the **I variant** the humidity path must be connected!

HYGRASGARD® AFF-SD
HYGRASGARD® AFTF-SD

On-wall humidity and temperature sensors (± 2.0 %), compact form, calibratable, with multi-range switching and active output

WS-04
Weather and sun protection hood (optional)



AFF-SD
AFTF-SD
compact form with display





HYGRASGARD® AFF-SD	On-wall humidity sensors, compact form (± 2.0 %), *Standard*
HYGRASGARD® AFTF-SD	On-wall humidity and temperature sensors, compact form (± 2.0 %), *Standard*

Type / WG01B	Measuring Range / Readout Humidity	Temperature	Output Humidity	Temperature	Display	Item No.
AFF-SD-I						**I-variant**
AFF-SD-I	0...100 % r. H.	–	4...20 mA	–		1201-1122-0000-100
AFF-SD-I DISPLAY	0...100 % r. H.	–	4...20 mA	–	■	1201-1122-0200-000
AFF-SD-U						**U-variant**
AFF-SD-U	0...100 % r. H.	–	0-10 V	–		1201-1121-0000-100
AFF-SD-U DISPLAY	0...100 % r. H.	–	0-10 V	–	■	1201-1121-0200-000
AFTF-SD-I						**I-variant**
AFTF-SD-I	0...100 % r. H.	–35...+75 °C –35...+35 °C 0...+50 °C 0...+80 °C	4...20 mA	4...20 mA		1201-1122-1000-100
AFTF-SD-I DISPLAY	0...100 % r. H.	–35...+75 °C –35...+35 °C 0...+50 °C 0...+80 °C	4...20 mA	4...20 mA	■	1201-1122-1200-100
AFTF-SD-U						**U-variant**
AFTF-SD-U	0...100 % r. H.	–35...+75 °C –35...+35 °C 0...+50 °C 0...+80 °C	0-10 V	0-10 V		1201-1121-1000-100
AFTF-SD-U DISPLAY	0...100 % r. H.	–35...+75 °C –35...+35 °C 0...+50 °C 0...+80 °C	0-10 V	0-10 V	■	1201-1121-1200-100

Accessories		
SF-M	**Metal** sinter filter, Ø 16 mm, L = 32 mm, exchangeable stainless steel **V4A** (1.4404)	7000-0050-2200-100
WS-01	**Sun and ball-impact protection hood**, 184 x 180 x 80 mm, stainless steel **V2A** (1.4301)	7100-0040-2000-000
WS-04	**Weather and sun protection hood**, 130 x 180 x 135 mm, stainless steel **V2A** (1.4301)	7100-0040-7000-000
	For further information, see last chapter Accessories!	

HYGRASGARD® AFF/AFTF
HYGRASGARD® AFF-20/AFTF-20, AFF-25/AFTF-25

On-wall humidity and temperature sensors (± 1.8 % / ± 2.0 %), calibratable, with multi-range switching and active/passive output

S+S REGELTECHNIK

Calibratable outdoor humidity/temperature sensor **HYGR**ASGARD® **AFF/AFTF** (± 2.0 %) and **AFF-20/AFTF-20** (± 1.8 %) with plastic sinter filter (optional metal sinter filter) or **AFF-25/AFTF-25** (± 1.8 %) with pluggable metal sinter filter; terminal-box enclosure made of impact-resistant plastic, **with / without optional display**. It measures the relative humidity and/or temperature of the air and converts the measurand into a standard signal of 0 - 10 V or 4...20 mA. They have four switchable temperature ranges and are applied in non-aggressive, dust-free atmospheres in refrigeration, air conditioning, ventilation and clean room technology. Relative humidity (in % r. H.) is the quotient of water vapour partial pressure divided by the saturation vapour pressure at the respective gas temperature. These measuring transducers are designed for exact detection of humidity. A digital long-term stable sensor is used as measuring element for humidity measurement. Fine adjustment by the user is possible.

TECHNICAL DATA

Power supply:	24 V AC (± 20 %); 15...36 V DC for U variant 15...36 V DC for I variant, depending on working resistance, residual ripple stabilised ± 0.3 V
Working resistance:	R_a (ohm) = (U_b -14 V) / 0.02 A for I variant
Load resistance:	R_L > 5 kOhm for U variant
Power consumption:	< 1.1 VA / 24 V DC; < 2.2 VA / 24 V AC
Sensors:	**digital humidity sensor with integrated temperature sensor,** low hysteresis, high long-term stability
Sensor protection:	**AFF / AFTF, AFF-20 / AFTF-20:** **plastic** sinter filter, Ø 16 mm, L = 35 mm, exchangeable (optional metal sinter filter, Ø 16 mm, L = 32 mm) **AFF-25 / AFTF-25:** **pluggable measuring head** (probe), stainless steel **V2A** (1.4301), with metal sinter filter, Ø 16 mm, L = 88.5 mm, exchangeable
HUMIDITY	
Measuring range, humidity:	0...100 % r. H. (output corresponding to 0 -10 V or 4...20 mA)
Permissible air humidity:	< 95 % r. H., non-precipitating air
Deviation, humidity:	**AFF / AFTF:** typically **± 2.0** % (20...80 % r. H.) at +25 °C, otherwise ± 3.0 % **AFF-20 / AFTF-20, AFF-25 / AFTF-25:** typically **± 1.8** % (10...90 % r. H.) at +25 °C, otherwise ± 2.0 %
Output, humidity:	0 -10 V for U variant 4...20 mA for I variant, see load resistance diagram
TEMPERATURE	
Measuring range, temperature:	**multi-range switching** (see table) **-35...+35 °C; -35...+75 °C; 0...+50 °C; 0...+80 °C** (output corresponding to 0 -10 V or 4...20 mA)
Ambient temperature:	storage –35...+85 °C; operation –30...+80 °C, non-precipitating
Deviation, temperature:	**AFF / AFTF:** typically ± 0.4 K at +25 °C **AFF-20 / AFTF-20, AFF-25 / AFTF-25:** typically ± 0.2 K at +25 °C
Output, temperature:	0 -10 V or 4...20 mA or Ohm value
Electrical connection:	2-, 3-, or 4-wire connection (see connecting diagram), 0.14 - 1.5 mm², via terminal screws
Enclosure:	plastic, UV-stabilised, material polyamide, 30 % glass-globe reinforced, with quick-locking screws (slotted / Phillips head combination), colour traffic white (similar to RAL 9016), enclosure cover for display is transparent!
Enclosure dimensions:	126 x 90 x 50 mm (Tyr 2)
Cable gland:	M 16 x 1.5, including strain relief, exchangeable, max. inner diameter 10.4 mm
Protective tube:	**stainless steel V2A** (1.4301), Ø 16 mm **AFF / AFTF:** NL = 55 mm **AFF-20 / AFTF-20:** NL = 137 mm **AFF-25 / AFTF-25:** NL = 88.5 mm
Process connection:	by screws
Long-term stability:	± 1 % per year
Protection class:	III (according to EN 60 730)
Protection type:	IP 65 (according to EN 60 529) enclosure only!
Standards:	CE conformity, according to EMC directive 2014 / 30 / EU, according to EN 61326-1, according to EN 61326-2-3
Optional:	three-line **display with illumination**, cutout 70 x 40 mm (W x H), for displaying ACTUAL temperature and / or ACTUAL humidity
ACCESSORIES	see last chapter

AFF / AFTF (± 2.0 %)
AFF-20 / AFTF-20 (± 1.8 %)
with plastic sinter filter (standard)





AFF-25 / AFTF-25 (± 1.8 %)
pluggable measuring head
with metal sinter filter



Dimensional drawing

AFF/AFTF
AFF-20/AFTF-20

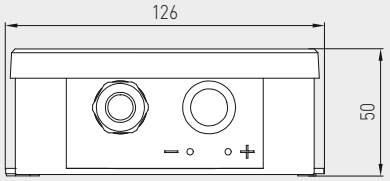

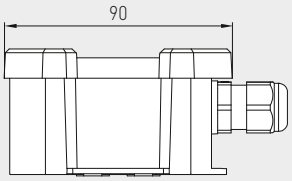

AFF/AFTF

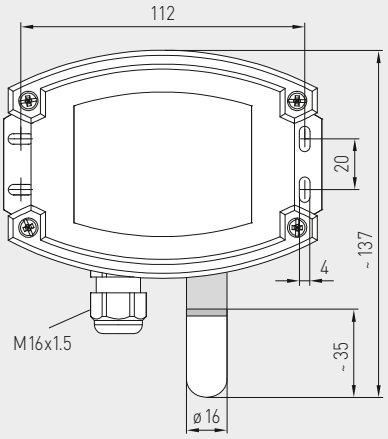

AFF-20/AFTF-20

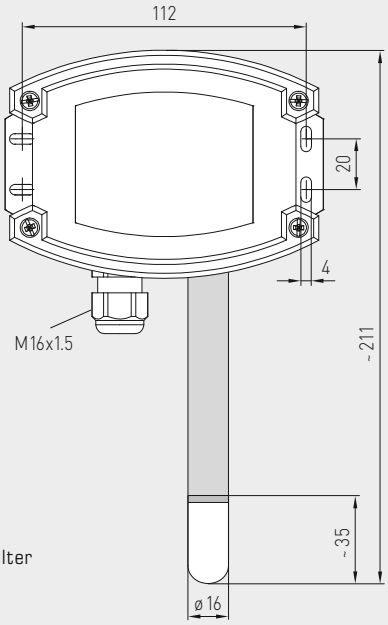



SF-K
Plastic sinter filter
(standard)



SF-M
Metal sinter filter
(optional)

AFF/AFTF (± 2.0 %)
AFF-20/AFTF-20 (± 1.8 %)
with display and
plastic sinter filter
(standard)





Dimensional drawing

AFF-25/AFTF-25

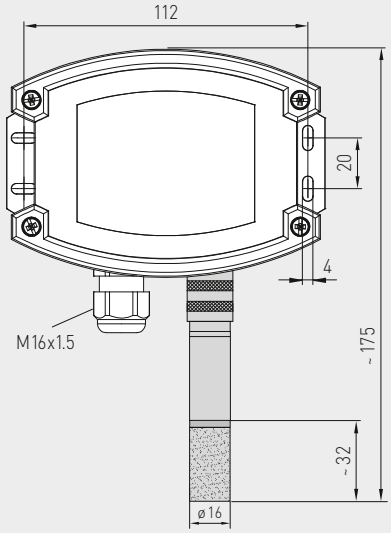

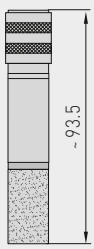

pluggable
measuring head
with **metal**
sinter filter

AFF-25/AFTF-25 (± 1.8 %)
pluggable measuring head
with metal sinter filter
and display



HYGRASGARD® AFF/AFTF
HYGRASGARD® AFF-20/AFTF-20, AFF-25/AFTF-25

On-wall humidity and temperature sensors (± 1.8 % / ± 2.0 %), calibratable, with multi-range switching and active/passive output

S+S REGELTECHNIK

Schematic diagram — **AFTF-xx-U with display**

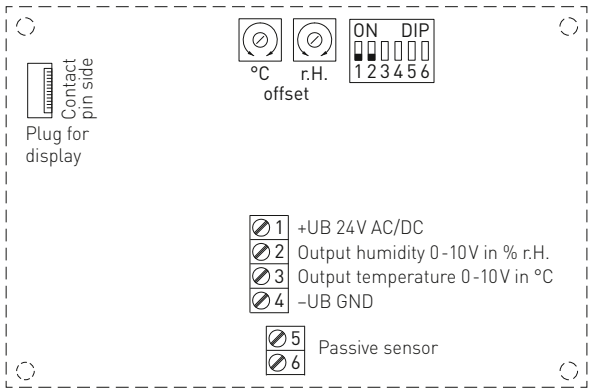

DIP 3, 4, 5, 6 are not assigned!

Schematic diagram** — **AFTF-xx-I with display**

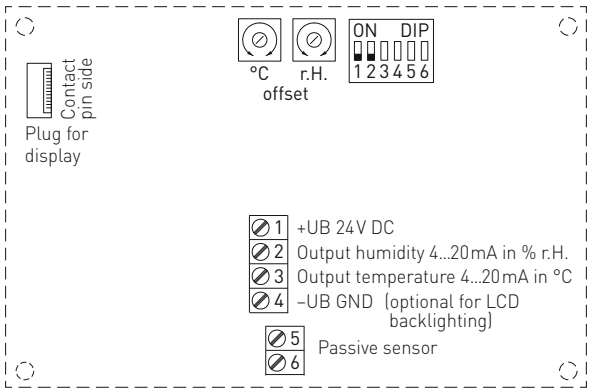

DIP 3, 4, 5, 6 are not assigned!

3-wire connection — **AFF-xx-U**

1 +UB 24V AC/DC
2 Output humidity in % r.H. 0-10V
3 Free
4 –UB-GND

2- or 3-wire connection* — **AFF-xx-I (Transmitter)**

1 +UB 24V DC
2 Output humidity in % r.H. 4...20mA
3 Free
4 –UB-GND (optional for backlighting)

4- or 6-wire connection* — **AFTF-U (passive temperature sensor)**

1 +UB 24V AC/DC
2 Output humidity in % r.H. 0-10V
3 Output temperature in °C 0-10V
4 –UB-GND

5 6 Passive element e.g. Pt1000, Ni1000, LMZ235Z

4-wire connection — **AFTF-xx-U**

1 +UB 24V AC/DC
2 Output humidity in % r.H. 0-10V
3 Output temperature in °C 0-10V
4 –UB-GND

3- or 4-wire connection** — **AFTF-xx-I (Transmitter)**

1 +UB 24V DC
2 Output humidity in % r.H. 4...20mA
3 Output temperature in °C 4...20mA
4 –UB-GND (optional for backlighting)

4- or 6-wire connection — **AFTF-I (passive temperature sensor)**

1 +UB 24V DC
2 Output humidity in % r.H. 4...20mA
3 Output temperature in °C 4...20mA
4 –UB-GND (optional for backlighting)

5 6 Passive element e.g. Pt1000, Ni1000, LMZ235Z

Temperature measuring ranges (adjustable)	**DIP 1**	**DIP 2**
–35...+75 °C	**ON**	**ON**
–35...+35 °C	OFF	OFF
0...+50 °C (default)	OFF	**ON**
0...+80 °C	**ON**	OFF

Load resistance diagram 4..20 mA — **AFF-xx AFTF-xx**

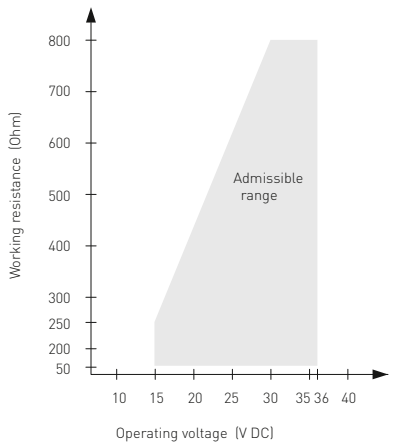

Connection*:

2-wire connection for devices with / without display (not illuminated)

3-wire connection for devices with illuminated display

Connection**:

3-wire connection for devices with / without display (not illuminated)

4-wire connection for devices with illuminated display

For the **I variant** the humidity path must be connected!

HYGRASGARD® AFF/AFTF
HYGRASGARD® AFF-20/AFTF-20, AFF-25/AFTF-25

On-wall humidity and temperature sensors (± 1.8 % / ± 2.0 %), calibratable, with multi-range switching and active/passive output

AFF/AFTF (± 2.0 %)
AFF-20/AFTF-20 (± 1.8 %)
with display



AFF-25/AFTF-25 (± 1.8 %)
with display



Temperature table
MR: –35...+75 °C

°C	U_A in V	I_A in mA
-35	0.0	4.0
-30	0.5	4.7
-25	0.9	5.5
-20	1.4	6.2
-15	1.8	6.9
-10	2.3	7.6
-5	2.7	8.4
0	3.2	9.1
5	3.6	9.8
10	4.1	10.5
15	4.5	11.3
20	5.0	12.0
25	5.5	12.7
30	5.9	13.5
35	6.4	14.2
40	6.8	14.9
45	7.3	15.6
50	7.7	16.4
55	8.2	17.1
60	8.6	17.8
65	9.1	18.5
70	9.5	19.2
75	10.0	20.0

Temperature table
MR: –35...+35 °C

°C	U_A in V	I_A in mA
-35	0.0	4.0
-30	0.7	5.1
-25	1.4	6.3
-20	2.1	7.4
-15	2.9	8.6
-10	3.6	9.7
-5	4.3	10.9
0	5.0	12.0
5	5.7	13.1
10	6.4	14.3
15	7.1	15.4
20	7.9	16.6
25	8.6	17.7
30	9.3	18.9
35	10.0	20.0

Temperature table
MR: 0...+50 °C

°C	U_A in V	I_A in mA
0	0.0	4.0
5	1.0	5.6
10	2.0	7.2
15	3.0	8.8
20	4.0	10.4
25	5.0	12.0
30	6.0	13.6
35	7.0	15.2
40	8.0	16.8
45	9.0	18.4
50	10.0	20.0

Temperature table
MR: 0...+80 °C

°C	U_A in V	I_A in mA
0	0.0	4.0
5	0.6	5.0
10	1.3	6.0
15	1.9	7.0
20	2.5	8.0
25	3.1	9.0
30	3.8	10.0
35	4.4	11.0
40	5.0	12.0
45	5.6	13.0
50	6.3	14.0
55	6.9	15.0
60	7.5	16.0
65	8.1	17.0
70	8.8	18.0
75	9.4	19.0
80	10.0	20.0

Humidity table
MR: 0...100 % r. H.

% r.H.	U_A in V	I_A in mA
0	0.0	4.0
5	0.5	4.8
10	1.0	5.6
15	1.5	6.4
20	2.0	7.2
25	2.5	8.0
30	3.0	8.8
35	3.5	9.6
40	4.0	10.4
45	4.5	11.2
50	5.0	12.0
55	5.5	12.8
60	6.0	13.6
65	6.5	14.4
70	7.0	15.2
75	7.5	16.0
80	8.0	16.8
85	8.5	17.6
90	9.0	18.4
95	9.5	19.2
100	10.0	20.0

On-wall humidity and temperature sensors (± 2.0 %), calibratable, with multi-range switching and active / passive output

S+S REGELTECHNIK

HYGRASGARD® **AFF**	On-wall humidity sensors (± 2.0 %), *Standard*
HYGRASGARD® **AFTF**	On-wall humidity and temperature sensors (± 2.0 %), *Standard*

Type / WG02	Measuring Range / Readout Humidity	Temperature	Output Humidity	Temperature	Display	Item No.
AFF-I						**(active)**
AFF-I TYR-2	0...100 % r. H.	–	4...20 mA	–		1201-7112-0000-000
AFF-I TYR-2 DISPLAY	0...100 % r. H.	–	4...20 mA	–	■	1201-7112-0400-000
AFF-U						**(active)**
AFF-U TYR-2	0...100 % r. H.	–	0-10 V	–		1201-7111-0000-000
AFF-U TYR-2 DISPLAY	0...100 % r. H.	–	0-10 V	–	■	1201-7111-0400-000
AFTF-I						**(active)**
AFTF-I TYR 2	0...100 % r. H.	–35...+75 °C –35...+35 °C 0...+50 °C 0...+80 °C	4...20 mA	4...20 mA		1201-7112-1000-000
AFTF-I TYR 2 DISPLAY	0...100 % r. H.	(4x as above)	4...20 mA	4...20 mA	■	1201-7112-1400-000
AFTF-U						**(active)**
AFTF-U TYR-2	0...100 % r. H.	–35...+75 °C –35...+35 °C 0...+50 °C 0...+80 °C	0-10 V	0-10 V		1201-7111-1000-000
AFTF-U TYR-2 DISPLAY	0...100 % r. H.	(4x as above)	0-10 V	0-10 V	■	1201-7111-1400-000

HYGRASGARD® **AFTF-U xx**	On-wall humidity and temperature sensors (± 2.0 %), *Standard*

Type / WG02	Measuring Range / Readout Humidity	Temperature	Output Humidity	Temperature	Item No.
AFTF-U xx	**Pt, Ni, LM235Z**				**(active / passive)**
AFTF-U PT100	0...100 % r. H.	–35...+75 °C –35...+35 °C 0...+50 °C 0...+80 °C	0-10 V	0-10 V + Pt100	1201-7111-2001-000
AFTF-U PT1000	0...100 % r. H.	(4x as above)	0-10 V	0-10 V + Pt1000	1201-7111-2005-000
AFTF-U NI1000	0...100 % r. H.	(4x as above)	0-10 V	0-10 V + Ni1000	1201-7111-2009-000
AFTF-U NITK	0...100 % r. H.	(4x as above)	0-10 V	0-10 V + Ni1000TK5000	1201-7111-2010-000
AFTF-U LM235Z	0...100 % r. H.	(4x as above)	0-10 V	0-10 V + LM235Z, 10mV / K	1201-7111-2021-000
AFTF-U xx	**NTC**				**(active / passive)**
AFTF-U NTC1,8K	0...100 % r. H.	–35...+75 °C –35...+35 °C 0...+50 °C 0...+80 °C	0-10 V	0-10 V + NTC 1.8 kOhm	1201-7111-2012-000
AFTF-U NTC10K	0...100 % r. H.	(4x as above)	0-10 V	0-10 V + NTC 10 kOhm	1201-7111-2015-000
AFTF-U NTC20K	0...100 % r. H.	(4x as above)	0-10 V	0-10 V + NTC 20 kOhm	1201-7111-2016-000

Accessories		
SF-M	**Metal** sinter filter, Ø 16 mm, L = 32 mm, exchangeable stainless steel **V4A** (1.4404)	7000-0050-2200-100
WS-01	**Sun and ball-impact protection hood**, 184 x 180 x 80 mm, stainless steel **V2A** (1.4301)	7100-0040-2000-000
WS-03	**Weather and sun protection hood**, 200 x 180 x 150 mm, stainless steel **V2A** (1.4301)	7100-0040-6000-000
	For further information see last chapter!	

HYGRASGARD® AFF-20 — On-wall humidity sensors (± 1.8 %), *Premium*
HYGRASGARD® AFTF-20 — On-wall humidity and temperature sensors (± 1.8 %), *Premium*

Type / WG02	Measuring Range / Readout Humidity	Temperature	Output Humidity	Temperature	Display	Item No.
AFF-20-I						**(active)**
AFF-20-I TYR-2	0...100 % r. H.	–	4... 20 mA	–		1201-7112-0000-201
AFF-20-I TYR-2 DISPLAY	0...100 % r. H.	–	4... 20 mA	–	■	1201-7112-0400-201
AFF-20-U						**(active)**
AFF-20-U TYR-2	0...100 % r. H.	–	0-10 V	–		1201-7111-0000-201
AFF-20-U TYR-2 DISPLAY	0...100 % r. H.	–	0-10 V	–	■	1201-7111-0400-201
AFTF-20-I						**(active)**
AFTF-20-I TYR-2	0...100 % r. H.	–35...+75 °C –35...+35 °C 0...+50 °C 0...+80 °C	4... 20 mA	4... 20 mA		1201-7112-1000-201
AFTF-20-I TYR-2 DISPLAY	0...100 % r. H.	(4x as above)	4... 20 mA	4... 20 mA	■	1201-7112-1400-201
AFTF-20-U						**(active)**
AFTF-20-U TYR-2	0...100 % r. H.	–35...+75 °C –35...+35 °C 0...+50 °C 0...+80 °C	0-10 V	0-10 V		1201-7111-1000-201
AFTF-20-U TYR-2 DISPLAY	0...100 % r. H.	(4x as above)	0-10 V	0-10 V	■	1201-7111-1400-201

HYGRASGARD® AFF-25 — On-wall humidity sensors, pluggable (± 1.8 %), *Deluxe*
HYGRASGARD® AFTF-25 — On-wall humidity and temperature sensors, pluggable (± 1.8 %), *Deluxe*

Type / WG02	Measuring Range / Readout Humidity	Temperature	Output Humidity	Temperature	Display	Item No.
AFF-25-I						**(active)**
AFF-25-I TYR-2	0...100 % r. H.	–	4... 20 mA	–		1201-7132-0000-101
AFF-25-I TYR-2 DISPLAY	0...100 % r. H.	–	4... 20 mA	–	■	1201-7132-0400-101
AFF-25-U						**(active)**
AFF-25-U TYR-2	0...100 % r. H.	–	0-10 V	–		1201-7131-0000-101
AFF-25-U TYR-2 DISPLAY	0...100 % r. H.	–	0-10 V	–	■	1201-7131-0400-101
AFTF-25-I						**(active)**
AFTF-25-I TYR-2	0...100 % r. H.	–35...+75 °C –35...+35 °C 0...+50 °C 0...+80 °C	4... 20 mA	4... 20 mA		1201-7132-1000-101
AFTF-25-I TYR-2 DISPLAY	0...100 % r. H.	(4x as above)	4... 20 mA	4... 20 mA	■	1201-7132-1400-101
AFTF-25-U						**(active)**
AFTF-25-U TYR-2	0...100 % r. H.	–35...+75 °C –35...+35 °C 0...+50 °C 0...+80 °C	0-10 V	0-10 V		1201-7131-1000-101
AFTF-25-U TYR-2 DISPLAY	0...100 % r. H.	(4x as above)	0-10 V	0-10 V	■	1201-7131-1400-101

Accessories		
SF-M	**Metal** sinter filter, Ø 16 mm, L = 32 mm, exchangeable stainless steel **V4A** (1.4404)	7000-0050-2200-100
MSK-25	Pluggable **measuring head** (probe) stainless steel **V2A** (1.4301), **Metal** sinter filter, Ø 16 mm, L = 88.5 mm, exchangeable replacement element for **AFF-25 / AFTF-25**	7201-1131-0000-000
WS-01	**Sun and ball-impact protection hood**, 184 x 180 x 80 mm, stainless steel **V2A** (1.4301)	7100-0040-2000-000
WS-03	**Weather and sun protection hood**, 200 x 180 x 150 mm, stainless steel **V2A** (1.4301)	7100-0040-6000-000
	For further information see last chapter!	

HYGRASGARD® AAVTF

On-wall outdoor humidity sensors (± 2.0 %), for mixture ratio, relative / absolute humidity, dew point, enthalpy (switchable) and temperature, with multi-range switching, with active output

S+S REGELTECHNIK

The universal humidity sensors **HYGR**ASGARD® **AAVTF** are used to determine diverse characteristic variables in humidity measurement. The relative humidity and temperature of the ambient air are measured. From these measurands, the different characteristic variables are internally calculated.

For device version x-U, two outputs of 0 - 10 V are available, for Version x-I two outputs of 4...20 mA. Here, the output variables for these outputs can be defined using DIP switches. Selectable for output 1 are relative humidity [% r. H.], absolute humidity [g / m³], mixture ratio [g / kg], dew point temperature [°C], or enthalpy [kJ / kg] (while neglecting the atmospheric air pressure). At output 2, four different measuring ranges for ambient temperature [°C] are selectable. Ex-factory condition (default) for output 1 is relative humidity 0...100 % r. H., for output 2 temperature measuring range 0...+50 °C. Due to the different configuration alternatives provided, numerous measurement and control tasks can be solved by just one device. These devices must be operated in pollutant-free, non-precipitating air, with neither above-atmospheric nor below-atmospheric pressure at the sensors. Application examples include medical technology, refrigeration, air conditioning, and clean room technology. These sensors are suitable for wall mounting.

AAVTF
with plastic sinter filter (standard)



SF-M
Metal sinter filter (optional)



TECHNICAL DATA

Power supply:	24 V AC (± 20 %); 15...36 V DC for U variant 15...36 V DC for I variant, depending on working resistance, residual ripple stabilised ± 0.3 V
Working resistance:	R_a (ohm) = (U_b -14 V) / 0.02 A for I variant
Load resistance:	R_L > 5 kOhm for U variant
Power consumption:	< 1 W at 24 V DC; < 2 VA at 24 V AC
Sensors:	**digital humidity sensor with integrated temperature sensor**, low hysteresis, high long-term stability
Sensor protection:	**plastic** sinter filter, Ø 16 mm, L = 35 mm, exchangeable (optional **metal** sinter filter, Ø 16 mm, L = 32 mm)
HUMIDITY	
Measuring range, humidity:	**multi-range switching with** **8 switchable measuring ranges** (see table) 0...100 % r. H. (default)
Operating range, humidity:	10...95 % r. H., without formation of dew
Deviation, humidity:	typically **± 2.0** % (20...80 % r. H.) at +25 °C, otherwise ± 3.0 % Deviations of other outputs result from deviations of humidity and temperature.
Output 1, humidity:	0 - 10 V for U variant (see table) 4...20 mA for I variant (see table)
TEMPERATURE	
Measuring range, temperature:	**multi-range switching with** **4 switchable measuring ranges** (see table) 0...+50 °C (default); –20...+80 °C; –35...+75 °C; –35...+35 °C
Operating range, temperature:	–35...+85 °C sensors
Deviation, temperature:	typically ± 0.6 K at +25 °C
Output 2, temperature:	0 - 10 V for U variant (see table) 4...20 mA for I variant (see table)
Ambient temperature:	storage –35...+85 °C; operation –30...+70 °C, non-precipitating
Electrical connection:	4-wire connection for U variant 3-wire connection for I variant (Transmitter) 0.14 - 1.5 mm², via terminal screws
Enclosure:	plastic, UV-stabilised, material polyamide, 30 % glass-globe reinforced, with quick-locking screws (slotted / Phillips head combination), colour traffic white (similar to RAL 9016), enclosure cover for display is transparent!
Enclosure dimensions:	72 x 64 x 37.8 mm (Tyr 1 without display) 72 x 64 x 43.3 mm (Tyr 1 with display)
Cable gland:	M 16 x 1.5, including strain relief, exchangeable, max. inner diameter 10.4 mm
Protective tube:	**stainless steel V2A** (1.4301), Ø = 16 mm, NL = 55 mm
Process connection:	by screws
Protection class:	III (according to EN 60 730)
Protection type:	IP 65 (according to EN 60 529) enclosure only!
Standards:	CE conformity, electromagnetic compatibility according to EN 61 326, EMC directive 2014 / 30 / EU
Optional:	two-line **display with illumination,** cutout approx. 36 x 15 mm (W x H), for displaying actual temperature and actual humidity, as well as the selectable output variables
ACCESSORIES	see last chapter

On-wall outdoor humidity sensors (± 2.0 %), for mixture ratio, relative / absolute humidity, dew point, enthalpy (switchable) and temperature, with multi-range switching, with active output

Dimensional drawing

AAVTF

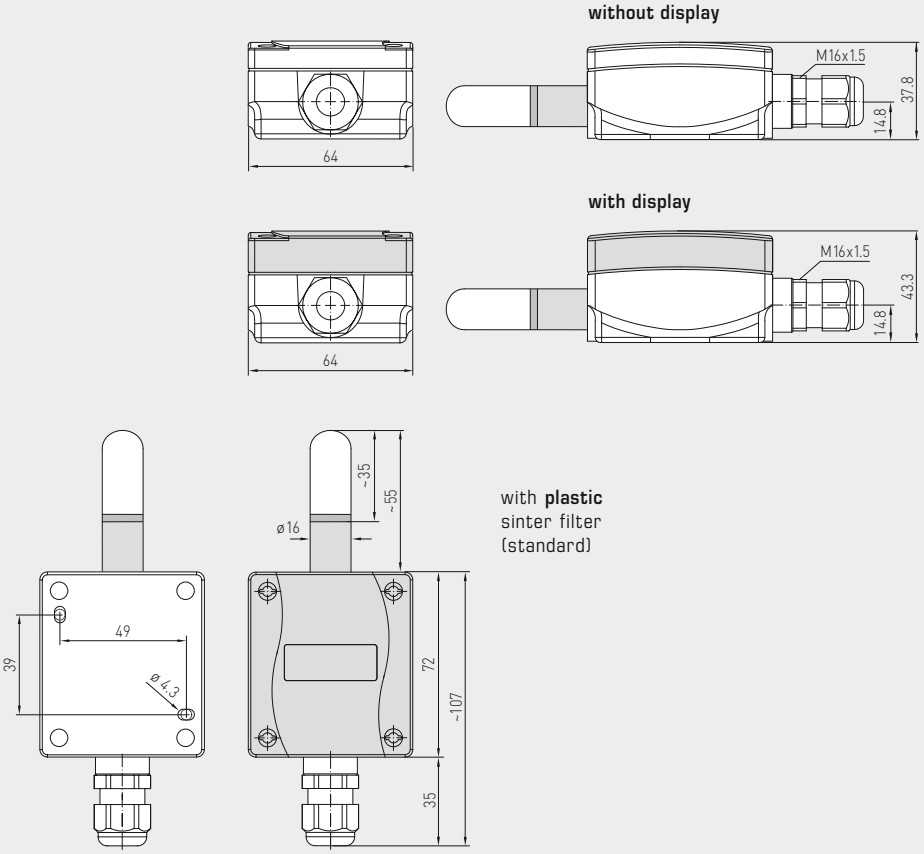

with **plastic** sinter filter (standard)

AAVTF
with display and plastic sinter filter (standard)



SF-M
Metal sinter filter (optional)



Temperature table
MR: –35...+75 °C

°C	U_A in V	I_A in mA
–35	0.0	4.0
– 30	0.5	4.7
– 25	0.9	5.5
– 20	1.4	6.2
– 15	1.8	6.9
– 10	2.3	7.6
– 5	2.7	8.4
0	3.2	9.1
5	3.6	9.8
10	4.1	10.5
15	4.5	11.3
20	5.0	12.0
25	5.5	12.7
30	5.9	13.5
35	6.4	14.2
40	6.8	14.9
45	7.3	15.6
50	7.7	16.4
55	8.2	17.1
60	8.6	17.8
65	9.1	18.5
70	9.5	19.2
75	10.0	20.0

Temperature table
MR: –35...+35 °C

°C	U_A in V	I_A in mA
–35	0.0	4.0
– 30	0.7	5.1
– 25	1.4	6.3
– 20	2.1	7.4
– 15	2.9	8.6
– 10	3.6	9.7
– 5	4.3	10.9
0	5.0	12.0
5	5.7	13.1
10	6.4	14.3
15	7.1	15.4
20	7.9	16.6
25	8.6	17.7
30	9.3	18.9
35	10.0	20.0

Temperature table
MR: 0...+50 °C

°C	U_A in V	I_A in mA
0	0.0	4.0
5	1.0	5.6
10	2.0	7.2
15	3.0	8.8
20	4.0	10.4
25	5.0	12.0
30	6.0	13.6
35	7.0	15.2
40	8.0	16.8
45	9.0	18.4
50	10.0	20.0

Temperature table
MR: –20...+80 °C

°C	U_A in V	I_A in mA
– 20	0.0	4.0
– 15	0.5	4.8
– 10	1.0	5.6
– 5	1.5	6.4
0	2.0	7.2
5	2.5	8.0
10	3.0	8.8
15	3.5	9.6
20	4.0	10.4
25	4.5	11.2
30	5.0	12.0
35	5.5	12.8
40	6.0	13.6
45	6.5	14.4
50	7.0	15.2
55	7.5	16.0
60	8.0	16.8
65	8.5	17.6
70	9.0	18.4
75	9.5	19.2
80	10.0	20.0

Humidity table
MR: 0...100 % r. H.

% r.H.	U_A in V	I_A in mA
0	0.0	4.0
5	0.5	4.8
10	1.0	5.6
15	1.5	6.4
20	2.0	7.2
25	2.5	8.0
30	3.0	8.8
35	3.5	9.6
40	4.0	10.4
45	4.5	11.2
50	5.0	12.0
55	5.5	12.8
60	6.0	13.6
65	6.5	14.4
70	7.0	15.2
75	7.5	16.0
80	8.0	16.8
85	8.5	17.6
90	9.0	18.4
95	9.5	19.2
100	10.0	20.0

HYGRASGARD® AAVTF

On-wall outdoor humidity sensors (± 2.0 %), for mixture ratio, relative / absolute humidity, dew point, enthalpy (switchable) and temperature, with multi-range switching, with active output

S+S REGELTECHNIK

Schematic diagram **AAVTF-U** with display

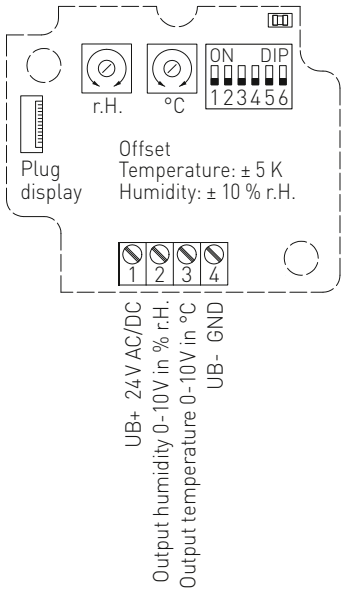

Schematic diagram **AAVTF-I** with display

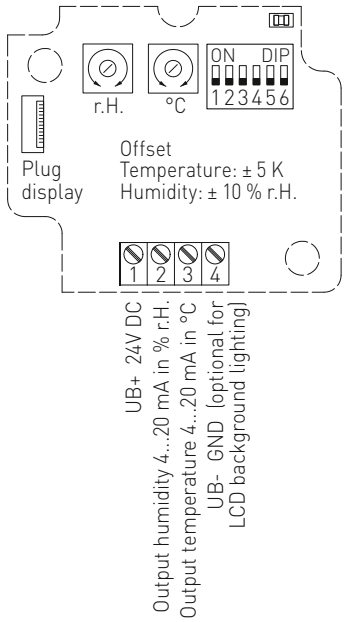

Load resistance diagram **AAVTF-I**
4..20 mA

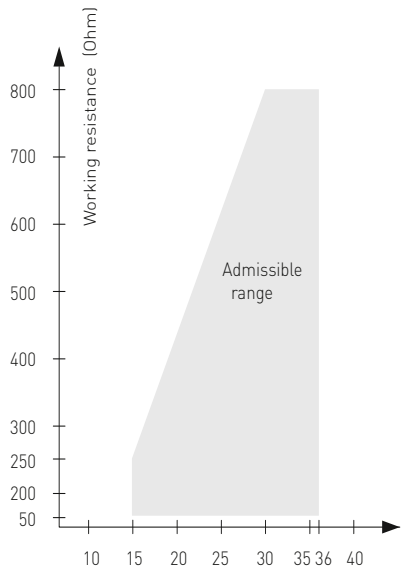

Temperature measuring ranges (adjustable)	DIP 1	DIP 2
0...+50 °C (default)	OFF	OFF
–20...+80 °C	**ON**	OFF
–35...+75 °C	OFF	**ON**
–35...+35 °C	**ON**	**ON**

Switchable measuring ranges (adjustable)	DIP 3	DIP 4	DIP 5
r.H.: **0...100 %** (default)	OFF	OFF	OFF
MR: 0...50 g / kg	**ON**	OFF	OFF
MR: 0...80 g / kg	OFF	**ON**	OFF
A.H.: 0...50 g / m³	OFF	OFF	**ON**
A.H.: 0...80 g / m³	**ON**	**ON**	OFF
DP: 0...+50 °C	**ON**	OFF	**ON**
DP: –20...+80 °C	OFF	**ON**	**ON**
ENT.: 0...85 kJ / kg	**ON**	**ON**	**ON**

Possible parameters:

(r.H.) = relative humidity in %
(MR) = mixture ratio in g / kg
(A.H.) = absolute humidity in g / m³
(DP) = dew point in °C
(ENT.) = enthalpy in kJ / kg

Service display / output (adjustable)	DIP 6
Display °C and % r.H., output of set measurements via DIP 1-5 (service mode for setting °C and % r.H.)	**ON**
Display and output of set measurements via DIP 1-5	OFF

AAVTF
with display



WS-04
Weather and sun protection hood (optional)



Display Standard — **AAVTF Display**



Displays alternative output variables — **AAVTF Display**

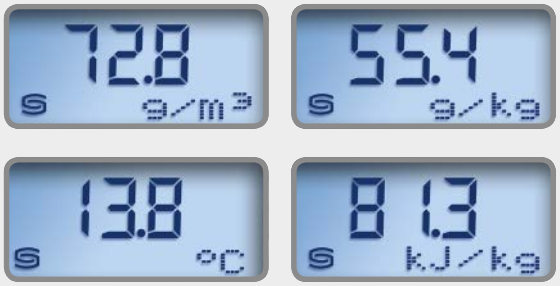

Displays service mode — **AAVTF Display**



By default, the display alternates between the **actual temperature** and the **actual humidity** (relative humidity). In this case, the first line displays the value while the second line displays the corresponding unit:

Temperature in °C
Relative humidity in % r.H.

For improved legibility, backlighting is provided.

DIP switches can be used to display an **alternative output variable** instead of the standard display:

Absolute humidity in g / m³
Dew point in °C
Mixture ratio in g / kg
Enthalpy in kJ / kg

The **service mode** simultaneously displays (alternately in the first and second lines) the **actual temperature** and the **actual humidity** (relative humidity).

HYGRASGARD® AAVTF On-wall outdoor humidity sensors (± 2.0 %)

Type / WG01	Measuring Range Humidity	Temperature	Output Humidity	Display Temperature		Item No.
AAVTF-I	(switchable)	(switchable)				**I-variant**
AAVTF-I	0 ...100 % r. H. (default) 0...50 g / kg (MR) 0...80 g / kg (MR) 0...50 g / m³ (A.H.) 0...80 g / m³ (A.H.) 0...+50 °C (DP) –20...+80 °C (DP) 0...85 kJ / kg (ENT.)	0...+50 °C (default) –20...+80 °C –35...+75 °C –35...+35 °C	4...20 mA	4...20 mA		1201-1162-6000-028
AAVTF-I DISPLAY	(8x as above)	(4x as above)	4...20 mA	4...20 mA	■	1201-1162-6200-028
AAVTF-U						**U-variant**
AAVTF-U	(8x as above)	(4x as above)	0-10 V	0-10 V		1201-1161-6000-028
AAVTF-U DISPLAY	(8x as above)	(4x as above)	0-10 V	0-10 V	■	1201-1161-6200-028
Extra charge:	Other non-standard ranges optional					

ACCESSORIES		
SF-M	**Metal** sinter filter, Ø 16 mm, L = 32 mm, exchangeable stainless steel **V4A** (1.4404)	7000-0050-2200-100
WS-01	**Sun and ball-impact protection hood**, 184 x 180 x 80 mm, stainless steel **V2A** (1.4301)	7100-0040-2000-000
WS-04	**Weather and sun protection hood**, 130 x 180 x 135 mm, stainless steel **V2A** (1.4301)	7100-0040-7000-000
	For further information, see last chapter Accessories!	

HYGRASGARD® KFF/KFTF/KFF-SD/KFTF-SD
HYGRASGARD® KFF-20/KFTF-20

Duct humidity and temperature sensors (± 1.8 % / ± 2.0 %), including mounting flange, calibratable, with multi-range switching and active/passive output

S+S REGELTECHNIK

Calibratable duct humidity-/temperature sensor **HYGR**ASGARD® **KFF-SD/KFTF-SD** (± 2.0%), with plastic sinter filter (optional metal sinter filter), enclosure made from impact-resistant plastic with snap-on lid.
Calibratable duct humidity/temperature sensor **HYGR**ASGARD® **KFF/KFTF** (± 2.0%) or **KFF-20/KFTF-20** (± 1.8%), with plastic sinter filter (optional metal sinter filter), enclosure made from impact-resistant plastic with quick-locking screws **with / without optional display**.
It measures the relative humidity and/or the temperature of the air and converts the measurands into a standard signal of 0-10 V or 4...20 mA. It has four switchable temperature ranges and is applied in non-aggressive dust-free atmospheres in refrigeration, air conditioning, ventilation and clean room technology.
Relative humidity (in % r. H.) is the quotient of water vapour partial pressure divided by the saturation vapour pressure at the respective gas temperature. These measuring transducers are designed for exact detection of humidity. A digital long-term stable sensor is used as measuring element for humidity measurement.
Fine adjustment by the user is possible.

TECHNICAL DATA

Power supply:	24 V AC (± 20 %); 15...36 V DC for U variant 15...36 V DC for I variant, depending on working resistance, residual ripple stabilised ± 0.3 V
Working resistance:	R_a (ohm) = (U_b -14 V) / 0.02 A for I variant
Load resistance:	R_L > 5 kOhm for U variant
Power consumption:	< 1.1 VA / 24 V DC; < 2.2 VA / 24 V AC
Sensors:	**digital humidity sensor with integrated temperature sensor,** low hysteresis, high long-term stability
Sensor protection:	**plastic** sinter filter, Ø 16 mm, L = 35 mm, exchangeable (optional **metal** sinter filter, Ø 16 mm, L = 32 mm)
HUMIDITY	
Measuring range, humidity:	0...100 % r. H. (output corresponding to 0 -10 V or 4...20 mA)
Permissible air humidity:	< 95 % r. H., non-precipitating air
Deviation, humidity:	**KFF / KFTF / KFF-SD / KFTF-SD:** typically **± 2.0** % (20...80 % r. H.) at +25 °C, otherwise ± 3.0 % **KFF-20 / KFTF-20:** typically **± 1.8** % (10...90 % r. H.) at +25 °C, otherwise ± 2.0 %
Output, humidity:	0 -10 V for U variant 4 ... 20 mA for I variant, see load resistance diagram
TEMPERATURE	
Measuring range, temperature:	**multi-range switching with 4 switchable measuring ranges** (see table) –35...+35 °C; –35...+75 °C; 0...+50 °C; 0...+80 °C (output corresponding to 0 -10 V or 4...20 mA)
Ambient temperature:	storage –35...+85 °C; operation –30...+75 °C, non-precipitating
Deviation, temperature:	typically ± 0.2 K at +25 °C
Output, temperature:	0 -10 V or 4 ... 20 mA or Ohm value
Electrical connection:	2-, 3-, or 4-wire connection (see connecting diagram), 0.14 - 1.5 mm², via terminal screws
Enclosure:	plastic, UV-stabilised, material polyamide, 30 % glass-globe reinforced, with quick-locking screws (slotted / Phillips head combination), colour traffic white (similar to RAL 9016), enclosure cover for display is transparent!
Enclosure dimensions:	**KFF / KFTF / KFF-20 / KFTF-20 / KFF-SD / KFTF-SD without display:** 72 x 64 x 37.8 mm (Tyr 1) **KFF / KFTF with display:** 72 x 64 x 43.3 mm (Tyr 1) **KFF-20 / KFTF-20 with display:** 26 x 90 x 50 mm (Tyr 2)
Cable gland:	M 16 x 1.5, including strain relief, exchangeable, max. inner diameter 10.4 mm
Protective tube:	**PLEUROFORM**™, material polyamide (PA6), with torsion protection Ø 20 mm, NL = 235 mm, v_{max} = 30 m/s (air) (on request, optional **stainless steel V2A** (1.4301), Ø 16 mm)
Process connection:	by mounting flange, plastic (included in the scope of delivery)
Long-term stability:	± 1 % per year
Protection class:	III (according to EN 60 730)
Protection type:	**KFF-SD / KFTF-SD:** **IP 43** (according to EN 60 529) enclosure only! **KFF / KFTF / KFF-20 / KFTF-20:** **IP 65** (according to EN 60 529) enclosure only!
Standards:	CE conformity, according to EMC directive 2014 / 30 / EU, according to EN 61326-1, according to EN 61326-2-3
Optional:	**display with illumination,** for displaying ACTUAL temperature and / or ACTUAL humidity **KFF / KFTF** (Tyr 1)**:** two-line, cutout approx. 36 x 15 mm (W x H) **KFF-20 / KFTF-20** (Tyr 2)**:** three-line, cutout approx. 70 x 40 mm (W x H)
ACCESSORIES	see last chapter

SF-K
Plastic sinter filter (standard)



SF-M
Metal sinter filter (optional)



Protective tube stainless steel
(optional on request)

MFT-20-K
Mounting flange, plastic



Dimensional drawing **MFT-20-K**

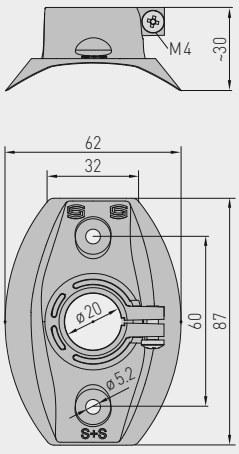

HYGRASGARD® KFF/KFTF/KFF-SD/KFTF-SD
HYGRASGARD® KFF-20/KFTF-20

Duct humidity and temperature sensors (± 1.8 % / ± 2.0 %), including mounting flange, calibratable, with multi-range switching and active/passive output

Dimensional drawing

KFF/KFTF with/without display
KFF-SD/KFTF-SD without display
KFF-20/KFTF-20 without display

without display **with display**

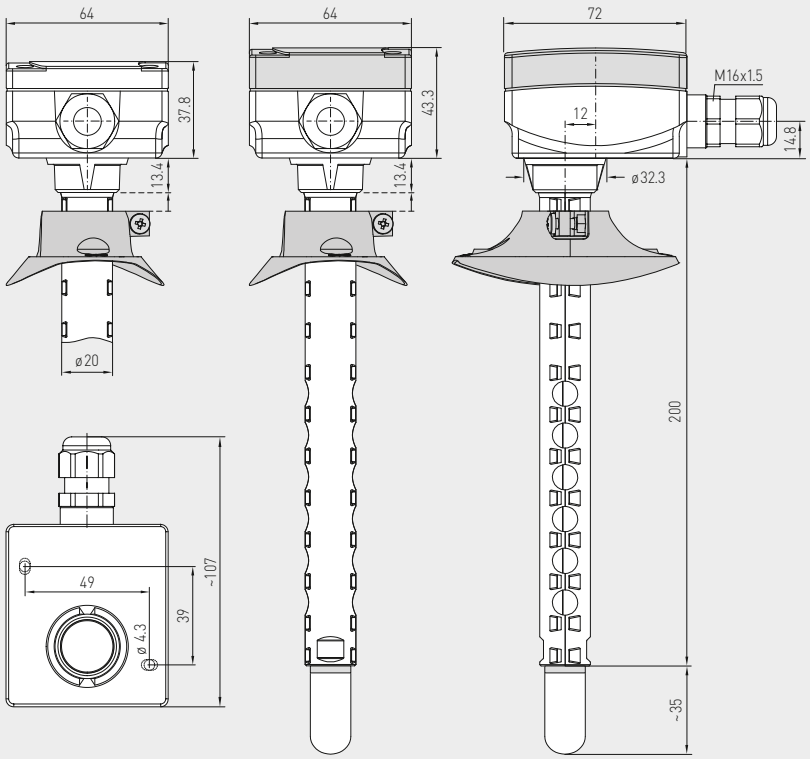

KFF-SD/KFTF-SD (± 2.0 %)
with snap-on lid
(IP 43)



KFF/KFTF (± 2.0 %)
KFF-20/KFTF-20 (± 1.8 %)
without display
(IP 65)



Dimensional drawing

KFF-20/KFTF-20
with display

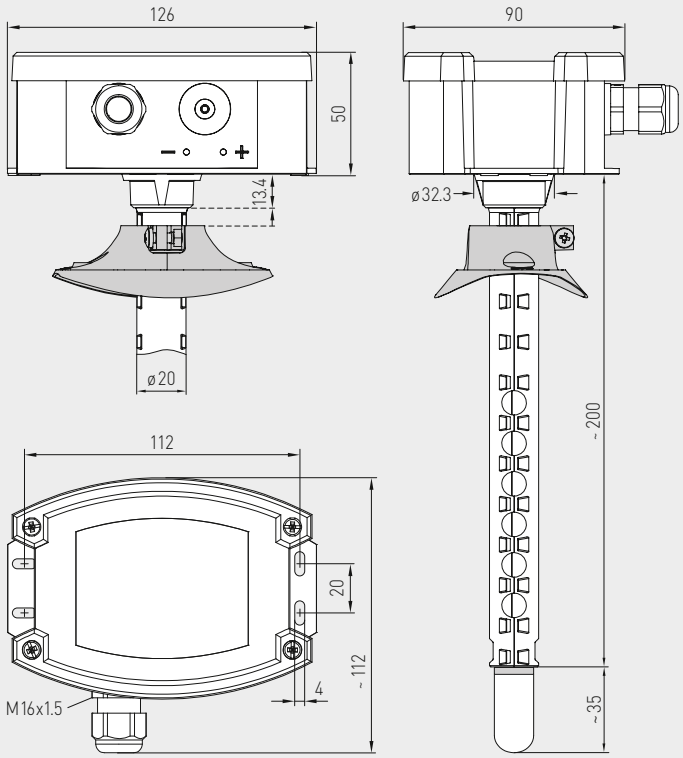

KFF/KFTF (± 2.0 %)
with display
(IP 65)



KFF-20/KFTF-20 (± 1.8 %)
with display
(IP 65)



HYGRASGARD® KFF/KFTF/KFF-SD/KFTF-SD
HYGRASGARD® KFF-20/KFTF-20

Duct humidity and temperature sensors (± 1.8 % / ± 2.0 %), including mounting flange, calibratable, with multi-range switching and active/passive output

S+S REGELTECHNIK

Schematic diagram — **KFTF-xx-U** with/without display (Tyr1)

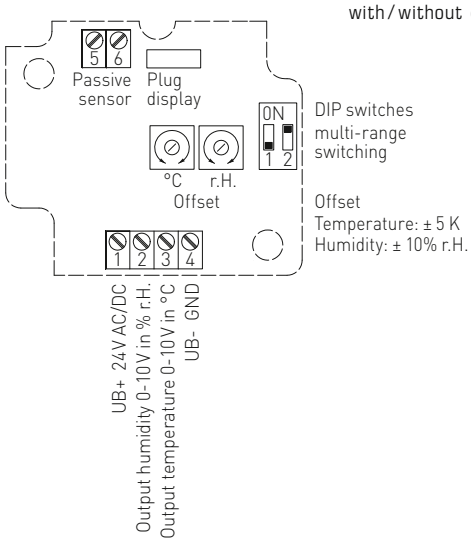

Schematic diagram** — **KFTF-xx-I** with/without display (Tyr1)

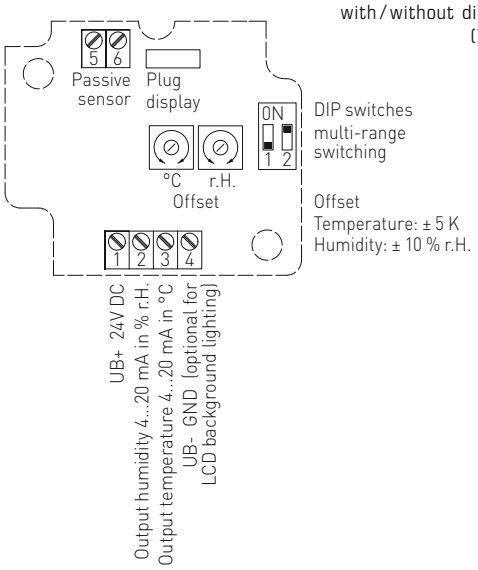

3-wire connection — **KFF-xx-U**

1	+UB 24V AC/DC
2	Output humidity in % r.H. 0-10V
3	Free
4	-UB-GND

2- or 3-wire connection* — **KFF-xx-I (Transmitter)**

1	+UB 24V DC
2	Output humidity in % r.H. 4...20mA
3	Free
4	-UB-GND (optional for backlighting)

4- or 6-wire connection — **KFTF-U (passive temperature sensor)**

1	+UB 24V AC/DC
2	Output humidity in % r.H. 0-10V
3	Output temperature in °C 0-10V
4	-UB-GND
5	Passive element
6	e.g. Pt1000, Ni1000, LMZ235Z

4-wire connection — **KFTF-xx-U**

1	+UB 24V AC/DC
2	Output humidity in % r.H. 0-10V
3	Output temperature in °C 0-10V
4	-UB-GND

3- or 4-wire connection** — **KFTF-xx-I (Transmitter)**

1	+UB 24V DC
2	Output humidity in % r.H. 4...20mA
3	Output temperature in °C 4...20mA
4	-UB-GND (optional for backlighting)

4- or 6-wire connection — **KFTF-I (passive temperature sensor)**

1	+UB 24V DC
2	Output humidity in % r.H. 4...20mA
3	Output temperature in °C 4...20mA
4	-UB-GND (optional for backlighting)
5	Passive element
6	e.g. Pt1000, Ni1000, LMZ235Z

Temperature measuring ranges (adjustable)	**DIP 1**	**DIP 2**
–35...+75 °C	**ON**	**ON**
–35...+35 °C	OFF	OFF
0...+50 °C (default)	OFF	**ON**
0...+80 °C	**ON**	OFF

Load resistance diagram 4..20 mA — **KFF-xx KFTF-xx**

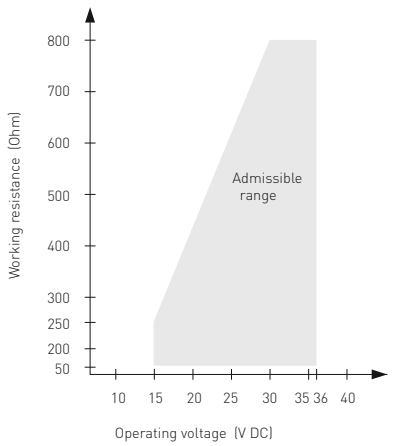

Connection*:

2-wire connection for devices with / without display (not illuminated)

3-wire connection for devices with illuminated display

Connection**:

3-wire connection for devices with / without display (not illuminated)

4-wire connection for devices with illuminated display

For the **I variant** the humidity path must be connected!

Schematic diagram

KFTF-20-U
with display
(Tyr2)

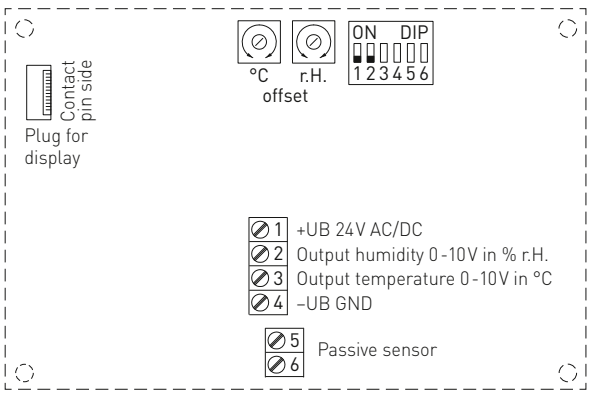

DIP 3, 4, 5, 6 are not assigned!

Schematic diagram**

KFTF-20-I
with display
(Tyr2)

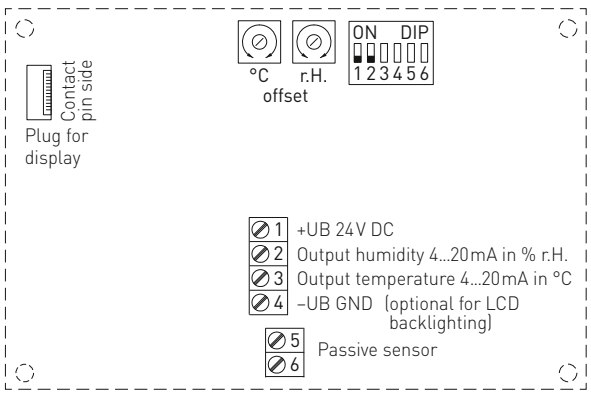

DIP 3, 4, 5, 6 are not assigned!

Temperature table
MR: –35...+75 °C

°C	U_A in V	I_A in mA
-35	0.0	4.0
-30	0.5	4.7
-25	0.9	5.5
-20	1.4	6.2
-15	1.8	6.9
-10	2.3	7.6
-5	2.7	8.4
0	3.2	9.1
5	3.6	9.8
10	4.1	10.5
15	4.5	11.3
20	5.0	12.0
25	5.5	12.7
30	5.9	13.5
35	6.4	14.2
40	6.8	14.9
45	7.3	15.6
50	7.7	16.4
55	8.2	17.1
60	8.6	17.8
65	9.1	18.5
70	9.5	19.2
75	10.0	20.0

Temperature table
MR: –35...+35 °C

°C	U_A in V	I_A in mA
-35	0.0	4.0
-30	0.7	5.1
-25	1.4	6.3
-20	2.1	7.4
-15	2.9	8.6
-10	3.6	9.7
-5	4.3	10.9
0	5.0	12.0
5	5.7	13.1
10	6.4	14.3
15	7.1	15.4
20	7.9	16.6
25	8.6	17.7
30	9.3	18.9
35	10.0	20.0

Temperature table
MR: 0...+50 °C

°C	U_A in V	I_A in mA
0	0.0	4.0
5	1.0	5.6
10	2.0	7.2
15	3.0	8.8
20	4.0	10.4
25	5.0	12.0
30	6.0	13.6
35	7.0	15.2
40	8.0	16.8
45	9.0	18.4
50	10.0	20.0

Temperature table
MR: 0...+80 °C

°C	U_A in V	I_A in mA
0	0.0	4.0
5	0.6	5.0
10	1.3	6.0
15	1.9	7.0
20	2.5	8.0
25	3.1	9.0
30	3.8	10.0
35	4.4	11.0
40	5.0	12.0
45	5.6	13.0
50	6.3	14.0
55	6.9	15.0
60	7.5	16.0
65	8.1	17.0
70	8.8	18.0
75	9.4	19.0
80	10.0	20.0

Humidity table
MR: 0...100 % r. H.

% r.H.	U_A in V	I_A in mA
0	0.0	4.0
5	0.5	4.8
10	1.0	5.6
15	1.5	6.4
20	2.0	7.2
25	2.5	8.0
30	3.0	8.8
35	3.5	9.6
40	4.0	10.4
45	4.5	11.2
50	5.0	12.0
55	5.5	12.8
60	6.0	13.6
65	6.5	14.4
70	7.0	15.2
75	7.5	16.0
80	8.0	16.8
85	8.5	17.6
90	9.0	18.4
95	9.5	19.2
100	10.0	20.0

HYGRASGARD® KFF/KFTF
HYGRASGARD® KFF-SD/KFTF-SD

Duct humidity and temperature sensors (± 2.0 %), including mounting flange, calibratable, with multi-range switching and active/passive output

S+S REGELTECHNIK

KFF-SD / KFTF-SD
with snap-on lid
(IP 43)



KFF / KFTF
with quick-locking screws
(IP 65)



KFF / KFTF
with display
(IP 65)



HYGRASGARD® KFF-SD Humidity sensors (± 2.0 %), *Standard* **HYGRASGARD® KFTF-SD** Humidity and temperature sensors (± 2.0 %), *Standard*					
Type / WG01	**Measuring Range / Readout** Humidity	Temperature	**Output** Humidity	Temperature	**Item No.**
KFF-SD-I					**IP 43 (active)**
KFF-SD-I	0...100 % r. H.	–	4...20 mA	–	1201-3182-0000-029
KFF-SD-U					**IP 43 (active)**
KFF-SD-U	0...100 % r. H.	–	0-10 V	–	1201-3181-0000-029
KFTF-SD-I					**IP 43 (active)**
KFTF-SD-I	0...100 % r. H.	–35...+75 °C –35...+35 °C 0...+50 °C 0...+80 °C	4...20 mA	4...20 mA	1201-3182-1000-029
KFTF-SD-U					**IP 43 (active)**
KFTF-SD-U	0...100 % r. H.	(4x as above)	0-10 V	0-10 V	1201-3181-1000-029

HYGRASGARD® KFF Humidity sensors (± 2.0 %), *Standard* **HYGRASGARD® KFTF** Humidity and temperature sensors (± 2.0 %), *Standard*						
Type / WG01	**Measuring Range / Readout** Humidity	Temperature	**Output** Humidity	Temperature	**Display**	**Item No.**
KFF-I						**IP 65 (active)**
KFF-I	0...100 % r. H.	–	4...20 mA	–		1201-3112-0000-029
KFF-I DISPLAY	0...100 % r. H.	–	4...20 mA	–	■	1201-3112-0200-029
KFF-U						**IP 65 (active)**
KFF-U	0...100 % r. H.	–	0-10 V	–		1201-3111-0000-029
KFF-U DISPLAY	0...100 % r. H.	–	0-10 V	–	■	1201-3111-0200-029
KFTF-I						**IP 65 (active)**
KFTF-I	0...100 % r. H.	(4x as above)	4...20 mA	4...20 mA		1201-3112-1000-029
KFTF-I DISPLAY	0...100 % r. H.	(4x as above)	4...20 mA	4...20 mA	■	1201-3112-1200-029
KFTF-U						**IP 65 (active)**
KFTF-U	0...100 % r. H.	(4x as above)	0-10 V	0-10 V		1201-3111-1000-029
KFTF-U DISPLAY	0...100 % r. H.	(4x as above)	0-10 V	0-10 V	■	1201-3111-1200-029

HYGRASGARD® KFTF-U xx Humidity and temperature sensors (± 2.0 %), *Standard*					
Type / WG01	**Measuring Range / Readout** Humidity	Temperature	**Output** Humidity	Temperature	**Item No.**
KFTF-U xx	**Pt, Ni, LM235Z, NTC**				**IP 65 (active / passive)**
KFTF-U PT100	0...100 % r. H.	(4x as above)	0-10 V	0-10 V + Pt100	1201-3111-2001-029
KFTF-U PT1000	0...100 % r. H.	(4x as above)	0-10 V	0-10 V + Pt1000	1201-3111-2005-029
KFTF-U NI1000	0...100 % r. H.	(4x as above)	0-10 V	0-10 V + Ni1000	1201-3111-2009-029
KFTF-U NITK	0...100 % r. H.	(4x as above)	0-10 V	0-10 V + Ni1000TK5000	1201-3111-2010-029
KFTF-U LM235Z	0...100 % r. H.	(4x as above)	0-10 V	0-10 V + LM235Z, 10mV / K	1201-3111-2021-029
KFTF-U NTC1,8K	0...100 % r. H.	(4x as above)	0-10 V	0-10 V + NTC 1,8 kOhm	1201-3111-2012-029
KFTF-U NTC10K	0...100 % r. H.	(4x as above)	0-10 V	0-10 V + NTC 10 kOhm	1201-3111-2015-029
KFTF-U NTC20K	0...100 % r. H.	(4x as above)	0-10 V	0-10 V + NTC 20 kOhm	1201-3111-2016-029

Duct humidity and temperature sensors (± 1.8 %), including mounting flange, calibratable, with multi-range switching and active /passive output

KFF-20 / KFTF-20
with display
(IP 65)



KFF-20 / KFTF-20
without display
(IP 65)



HYGRASGARD® KFF-20 Humidity sensors (± 1.8 %), *Premium* **HYGRASGARD® KFTF-20** Humidity and temperature sensors (± 1.8 %), *Premium*						
Type / WG02	**Measuring Range / Readout** Humidity	Temperature	**Output** Humidity	Temperature	**Display**	**Item No.**
KFF-20-I						**IP 65 (active)**
KFF-20-I	0...100 % r. H.	–	4... 20 mA	–		1201-3112-0000-030
KFF-20-I TYR-2 DISPLAY	0...100 % r. H.	–	4... 20 mA	–	■	1201-8112-0400-030
KFF-20-U						**IP 65 (active)**
KFF-20-U	0...100 % r. H.	–	0-10 V	–		1201-3111-0000-030
KFF-20-U TYR-2 DISPLAY	0...100 % r. H.	–	0-10 V	–	■	1201-8111-0400-030
KFTF-20-I						**IP 65 (active)**
KFTF-20-I	0...100 % r. H.	–35...+75 °C –35...+35 °C 0...+50 °C 0...+80 °C	4... 20 mA	4... 20 mA		1201-3112-1000-030
KFTF-20-I TYR-2 DISPLAY	0...100 % r. H.	(4x as above)	4... 20 mA	4... 20 mA	■	1201-8112-1400-030
KFTF-20-U						**IP 65 (active)**
KFTF-20-U	0...100 % r. H.	–35...+75 °C –35...+35 °C 0...+50 °C 0...+80 °C	0-10 V	0-10 V		1201-3111-1000-030
KFTF-20-U TYR-2 DISPLAY	0...100 % r. H.	(4x as above)	0-10 V	0-10 V	■	1201-8111-1400-030

Accessories		
SF-M	**Metal** sinter filter, Ø 16 mm, L = 32 mm, exchangeable stainless steel **V4A** (1.4404)	7000-0050-2200-100

HYGRASGARD® KAVTF

Duct outdoor humidity sensors (± 2.0 %), including mounting flange, for mixture ratio, relative / absolute humidity, dew point, enthalpy (switchable) and temperature, with multi-range switching, with active output

S+S REGELTECHNIK

The universal humidity sensors **HYGR**ASGARD® **KAVTF** with 6 output sizes are used to determine diverse characteristic variables in humidity measurement. The relative humidity and temperature of the ambient air are measured. From these measurands, the different characteristic variables are internally calculated. For device version x-U, two outputs of 0 - 10 V are available, for Version x-I two outputs of 4...20 mA. Here, the output variables for these outputs can be defined using DIP switches. Selectable for output 1 are relative humidity [% r. H.], absolute humidity [g / m³], mixture ratio [g / kg], dew point temperature [°C], or enthalpy [kJ / kg] (while neglecting the atmospheric air pressure). At output 2, four different measuring ranges for ambient temperature [°C] are selectable. Ex-factory condition (default) for output 1 is relative humidity 0...100 % r. H., for output 2 temperature measuring range 0...+50 °C. Due to the different configuration alternatives provided, numerous measurement and control tasks can be solved by just one device. These devices are to be operated in pollutant-free non-precipitating air, with neither above-atmospheric nor below-atmospheric pressure at the sensors. Application examples include medical technology, refrigeration, air conditioning, and clean room technology. These sensors are appropriate for duct installation.

TECHNICAL DATA

Power supply:	24 V AC (± 20 %); 15...36 V DC for U variant 15...36 V DC for I variant, depending on working resistance, residual ripple stabilised ± 0.3 V
Working resistance:	R_a (ohm) = (U_b -14 V) / 0.02 A for I variant
Load resistance:	R_L > 5 kOhm for U variant
Power consumption:	< 1 W at 24 V DC; < 2 VA at 24 V AC
Sensors:	**digital humidity sensor with integrated temperature sensor,** low hysteresis, high long-term stability
Sensor protection:	**plastic** sinter filter, Ø 16 mm, L = 35 mm, exchangeable (optional **metal** sinter filter, Ø 16 mm, L = 32 mm)
HUMIDITY	
Measuring range, humidity:	**multi-range switching with 8 switchable measuring ranges** (see table) 0...100 % r. H. (default)
Operating range, humidity:	10...95 % r. H., without formation of dew
Deviation, humidity:	typically **± 2.0** % (20...80 % r. H.) at +25 °C, otherwise ± 3.0 % Deviations of other outputs result from deviations of humidity and temperature.
Output 1, humidity:	0 - 10 V for U variant (see table) 4...20 mA for I variant (see table)
TEMPERATURE	
Measuring range, temperature:	**multi-range switching with 4 switchable measuring ranges** (see table) 0...+50 °C (default); –20...+80 °C; –35...+75 °C; –35...+35 °C
Operating range, temperature:	–35...+85 °C sensors
Deviation, temperature:	typically ± 0.2 K at +25 °C
Output 2, temperature:	0 - 10 V for U variant (see table) 4...20 mA for I variant (see table)
Ambient temperature:	storage –35...+85 °C; operation –30...+70 °C, non-precipitating
Electrical connection:	4-wire connection for U variant 3-wire connection for I variant (Transmitter) 0.14 - 1.5 mm², via terminal screws
Enclosure:	plastic, UV-stabilised, material polyamide, 30 % glass-globe reinforced, with quick-locking screws (slotted / Phillips head combination), colour traffic white (similar to RAL 9016), enclosure cover for display is transparent!
Enclosure dimensions:	72 x 64 x 37.8 mm (Tyr 1 without display) 72 x 64 x 43.3 mm (Tyr 1 with display)
Cable gland:	M 16 x 1.5, including strain relief, exchangeable, max. inner diameter 10.4 mm
Protective tube:	**PLEUROFORM**™, material polyamide (PA6), with torsion protection Ø 20 mm, NL = 235 mm, v_{max} = 30 m/s (air) (on request, optional **stainless steel V2A** (1.4301), Ø 16 mm)
Process connection:	by mounting flange, plastic (included in the scope of delivery)
Protection class:	III (according to EN 60 730)
Protection type:	IP 65 (according to EN 60 529) enclosure only!
Standards:	CE conformity, electromagnetic compatibility according to EN 61 326, EMC directive 2014 / 30 / EU
Optional:	two-line **display with illumination,** cutout approx. 36 x 15 mm (W x H), for displaying actual temperature and actual humidity, as well as the selectable output variables
ACCESSORIES	see last chapter

SF-K
Plastic sinter filter (standard)



SF-M
Metal sinter filter (optional)



Protective tube stainless steel
(optional on request)

MFT-20-K
Mounting flange, plastic



Dimensional drawing **MFT-20-K**

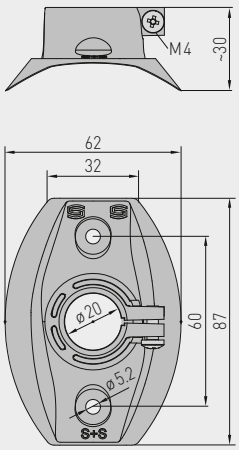

Duct outdoor humidity sensors (± 2.0 %), including mounting flange, for mixture ratio, relative / absolute humidity, dew point, enthalpy (switchable) and temperature, with multi-range switching, with active output

Dimensional drawing **KAVTF**

without display **with display**

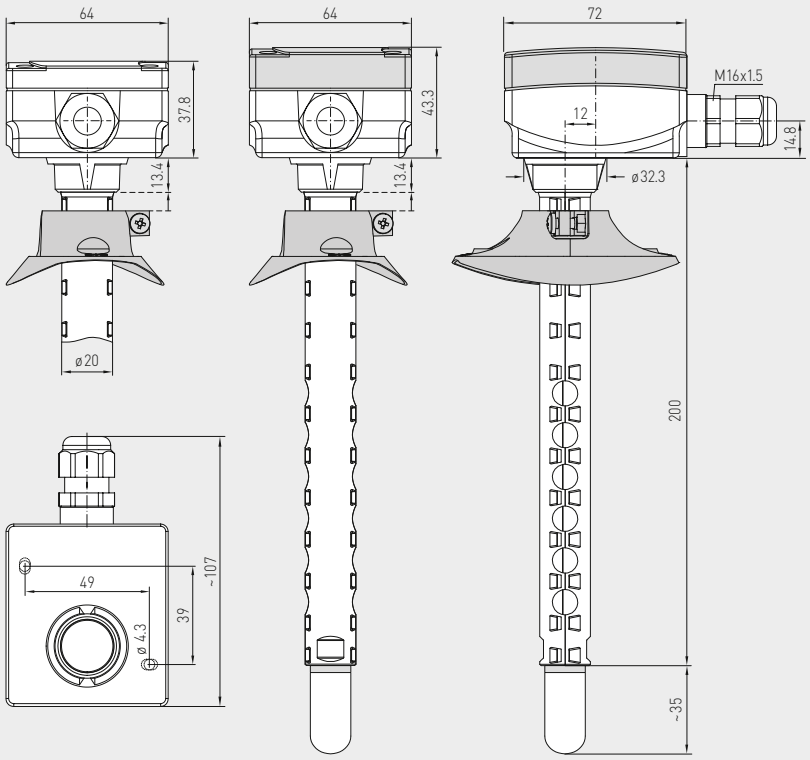

KAVTF
with plastic sinter filter (standard)



Temperature table
MR: –35...+75 °C

°C	U_A in V	I_A in mA
-35	0.0	4.0
-30	0.5	4.7
-25	0.9	5.5
-20	1.4	6.2
-15	1.8	6.9
-10	2.3	7.6
-5	2.7	8.4
0	3.2	9.1
5	3.6	9.8
10	4.1	10.5
15	4.5	11.3
20	5.0	12.0
25	5.5	12.7
30	5.9	13.5
35	6.4	14.2
40	6.8	14.9
45	7.3	15.6
50	7.7	16.4
55	8.2	17.1
60	8.6	17.8
65	9.1	18.5
70	9.5	19.2
75	10.0	20.0

Temperature table
MR: –35...+35 °C

°C	U_A in V	I_A in mA
-35	0.0	4.0
-30	0.7	5.1
-25	1.4	6.3
-20	2.1	7.4
-15	2.9	8.6
-10	3.6	9.7
-5	4.3	10.9
0	5.0	12.0
5	5.7	13.1
10	6.4	14.3
15	7.1	15.4
20	7.9	16.6
25	8.6	17.7
30	9.3	18.9
35	10.0	20.0

Temperature table
MR: 0...+50 °C

°C	U_A in V	I_A in mA
0	0.0	4.0
5	1.0	5.6
10	2.0	7.2
15	3.0	8.8
20	4.0	10.4
25	5.0	12.0
30	6.0	13.6
35	7.0	15.2
40	8.0	16.8
45	9.0	18.4
50	10.0	20.0

Temperature table
MR: –20...+80 °C

°C	U_A in V	I_A in mA
-20	0.0	4.0
-15	0.5	4.8
-10	1.0	5.6
-5	1.5	6.4
0	2.0	7.2
5	2.5	8.0
10	3.0	8.8
15	3.5	9.6
20	4.0	10.4
25	4.5	11.2
30	5.0	12.0
35	5.5	12.8
40	6.0	13.6
45	6.5	14.4
50	7.0	15.2
55	7.5	16.0
60	8.0	16.8
65	8.5	17.6
70	9.0	18.4
75	9.5	19.2
80	10.0	20.0

Humidity table
MR: 0...100 % r. H.

% r.H.	U_A in V	I_A in mA
0	0.0	4.0
5	0.5	4.8
10	1.0	5.6
15	1.5	6.4
20	2.0	7.2
25	2.5	8.0
30	3.0	8.8
35	3.5	9.6
40	4.0	10.4
45	4.5	11.2
50	5.0	12.0
55	5.5	12.8
60	6.0	13.6
65	6.5	14.4
70	7.0	15.2
75	7.5	16.0
80	8.0	16.8
85	8.5	17.6
90	9.0	18.4
95	9.5	19.2
100	10.0	20.0

HYGRASGARD® KAVTF

Duct outdoor humidity sensors (± 2.0 %), including mounting flange, for mixture ratio, relative / absolute humidity, dew point, enthalpy (switchable) and temperature, with multi-range switching, with active output

S+S REGELTECHNIK

Schematic diagram **KAVTF-U** with display

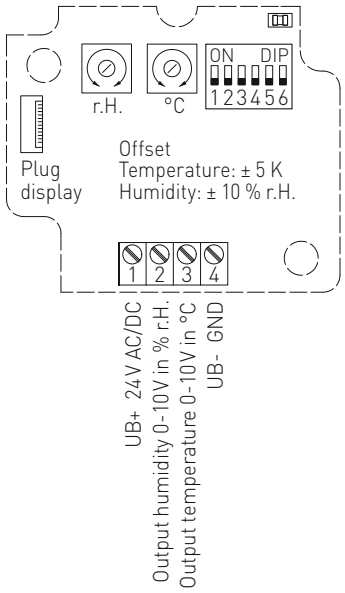

Schematic diagram **KAVTF-I** with display

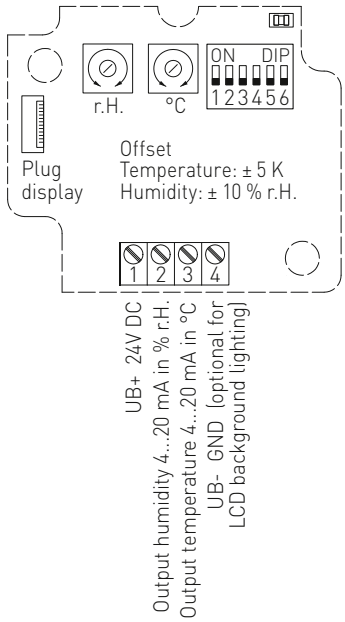

Load resistance diagram **KAVTF-I** 4..20 mA

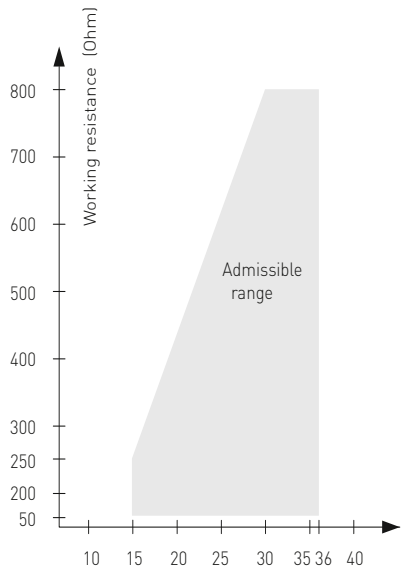

Temperature measuring ranges (adjustable)	DIP 1	DIP 2
0...+50 °C (default)	OFF	OFF
–20...+80 °C	**ON**	OFF
–35...+75 °C	OFF	**ON**
–35...+35 °C	**ON**	**ON**

Switchable measuring ranges (adjustable)	DIP 3	DIP 4	DIP 5
r.H.: **0...100 %** (default)	OFF	OFF	OFF
MR: 0...50 g / kg	**ON**	OFF	OFF
MR: 0...80 g / kg	OFF	**ON**	OFF
A.H.: 0...50 g / m³	OFF	OFF	**ON**
A.H.: 0...80 g / m³	**ON**	**ON**	OFF
DP: 0...+50 °C	**ON**	OFF	**ON**
DP: –20...+80 °C	OFF	**ON**	**ON**
ENT.: 0...85 kJ / kg	**ON**	**ON**	**ON**

Possible parameters:

(r.H.) = relative humidity in %
(MR) = mixture ratio in g / kg
(A.H.) = absolute humidity in g / m³
(DP) = dew point in °C
(ENT.) = enthalpy in kJ / kg

Service display / output (adjustable)	DIP 6
Display °C and % r.H., output of set measurements via DIP 1-5 (service mode for setting °C and % r.H.)	**ON**
Display and output of set measurements via DIP 1-5	OFF

KAVTF
with plastic sinter filter
SF-K (standard)



KAVTF
with metal sinter filter
SF-M (optional)



Duct outdoor humidity sensors (± 2.0 %), including mounting flange, for mixture ratio, relative / absolute humidity, dew point, enthalpy (switchable) and temperature, with multi-range switching, with active output

Display Standard — **KAVTF Display**



Displays alternative output variables — **KAVTF Display**

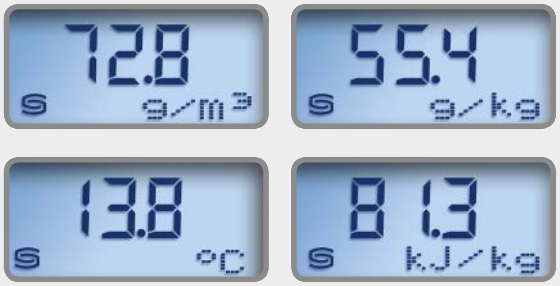

Displays service mode — **KAVTF Display**



By default, the display alternates between the **actual temperature** and the **actual humidity** (relative humidity). In this case, the first line displays the value while the second line displays the corresponding unit:

Temperature in °C
Relative humidity in % r.H.

For improved legibility, backlighting is provided.

DIP switches can be used to display an **alternative output variable** instead of the standard display:

Absolute humidity in g / m³
Dew point in °C
Mixture ratio in g / kg
Enthalpy in kJ / kg

The **service mode** simultaneously displays (alternately in the first and second lines) the **actual temperature** and the **actual humidity** (relative humidity).



KAVTF with display

HYGRASGARD® KAVTF Duct outdoor humidity sensors (± 2.0 %)

Type / WG01	Measuring Range Humidity		Temperature		Output Humidity	Display Temperature		Item No.
KAVTF-I	(switchable)		(switchable)					**I-variant**
KAVTF-I	0 ...100 % r. H.	(default)	0...+50 °C	(default)	4...20 mA	4...20 mA		1201-3162-6000-029
	0...50 g / kg	(MR)	–20...+80 °C					
	0...80 g / kg	(MR)	–35...+75 °C					
	0...50 g / m³	(A.H.)	–35...+35 °C					
	0...80 g / m³	(A.H.)						
	0...+50 °C	(DP)						
	–20...+80 °C	(DP)						
	0...85 kJ / kg	(ENT.)						
KAVTF-I DISPLAY	(8x as above)		(4x as above)		4...20 mA	4...20 mA	■	1201-3162-6200-029
KAVTF-U								**U-variant**
KAVTF-U	(8x as above)		(4x as above)		0-10 V	0-10 V		1201-3161-6000-029
KAVTF-U DISPLAY	(8x as above)		(4x as above)		0-10 V	0-10 V	■	1201-3161-6200-029
Extra charge:	Other non-standard ranges optional							

ACCESSORIES		
SF-M	**Metal** sinter filter, Ø 16 mm, L = 32 mm, exchangeable stainless steel **V4A** (1.4404)	7000-0050-2200-100

S+S REGELTECHNIK

Pendulum room humidity sensors (± 2.0 %), calibratable, with active output

The calibratable pendulum room humidity sensor **HYGR**ASGARD® **RPFF-SD** with plastic sinter filter measures the relative humidity of air. It converts the measurand humidity into a standard signal of 4...20 mA. Relative humidity (in % r. H.) is the quotient of water vapour partial pressure divided by the saturation vapour pressure at the respective gas temperature.

The sensor applied in non-aggressive dust-free atmospheres in refrigeration, air conditioning, ventilation and clean room technology, hotels, technical rooms, meeting rooms and convention centres. These measuring transducers are designed for precise detection of humidity. A digital long-term stable sensor is used as a measuring element for humidity measurement. This sensor is suitable for duct installation, as a pendulum sensor, or for integration in equipment.

TECHNICAL DATA

Power supply:	15...36 V DC depending on working resistance, residual ripple stabilised ± 0.3 V
Working resistance:	R_a (Ohm) = (U_b -14 V) / 0.03 A R_a < 500 Ohm
Power consumption:	< 1.1 VA / 24 V DC
Sensors:	**digital humidity sensor** small hysteresis, high long-term stability
Sensor protection:	**plastic** sinter filter, Ø 16 mm, L = 35 mm, exchangeable (optional **metal** sinter filter, Ø 16 mm, L = 32 mm)
Measuring range, humidity:	0...100 % r. H. (output corresponding to 4...20 mA)
Operating range, humidity:	0...95 % r. H. (without formation of dew)
Deviation, humidity:	typically **± 2.0** % (20...80 % r. H.) at +25 °C, otherwise ± 3.0 %
Output, humidity:	4...20 mA, see load resistance diagram
Ambient temperature:	storage –25...+50 °C operation –5...+55 °C
Long-term stability:	± 1 % per year
Electrical connection:	2-wire connection (see connecting diagram), 0.14 - 1.5 mm²
Connection cable:	PVC, LiYY, 2 x 0.25 mm², KL = approx. 1.5 m (other lengths optional)
Protective tube:	**stainless steel V2A** (1.4301), Ø =16 mm, NL = 142 mm
Protection class:	III (according to EN 60 730)
Protection type:	IP 65 (according to EN 60 529)
Standards:	CE conformity, according to EMC directive 2014 / 30 / EU, according to EN 61326-1, according to EN 61326-2-3
ACCESSORIES	see last chapter

Humidity table
MR: 0 ...100 % r. H.

% r.H.	U_A in V	I_A in mA
0	0.0	4.0
5	0.5	4.8
10	1.0	5.6
15	1.5	6.4
20	2.0	7.2
25	2.5	8.0
30	3.0	8.8
35	3.5	9.6
40	4.0	10.4
45	4.5	11.2
50	5.0	12.0
55	5.5	12.8
60	6.0	13.6
65	6.5	14.4
70	7.0	15.2
75	7.5	16.0
80	8.0	16.8
85	8.5	17.6
90	9.0	18.4
95	9.5	19.2
100	10.0	20.0

Load resistance diagram **RPFF-SD**
4...20 mA

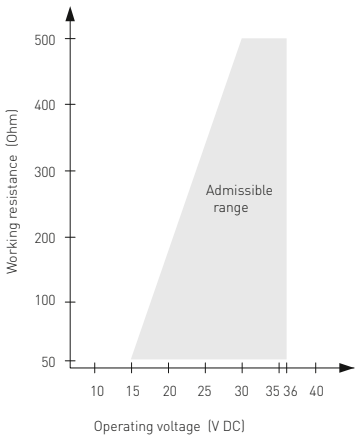

Circuit board **RPFF-SD**



2-wire connection **RPFF-SD-I (Transmitter)**

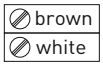

+UB 24V DC
Output humidity in % r.H. 4-20mA

Dimensional drawing **MF-16-K**

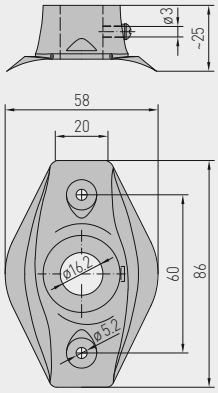

MF-16-K

Mounting flange, plastic (optional)



Dimensional drawing **RPFF-SD**

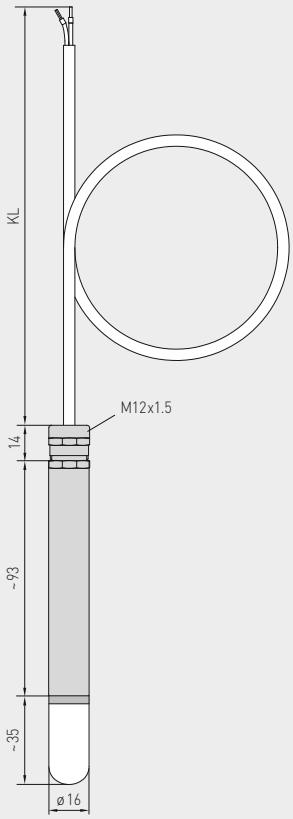

RPFF-SD

with plastic sinter filter (standard)



SF-M

Metal sinter filter (optional)



HYGRASGARD® RPFF-SD Pendulum room humidity sensors (± 2.0 %), *Standard*			
Type / WG01	**Measuring Range** Humidity (relative)	**Output** Humidity (relative)	**Item No.**
RPFF-SD-I			**I- variant**
RPFF-SD-I	0...100 % r. H.	4...20 mA	1201-1172-0000-150
Extra charge:	**Cable length** (KL) 1.5 m, other lengths optional		on request
For special orders please specify:	Type, cable length e.g. RPFF-SD-I, 3 m; RPFF-SD-I, 4 m		

Accessories		
SF-M	**Metal** sinter filter, Ø 16 mm, L = 32 mm, exchangeable stainless steel **V4A** (1.4404)	7000-0050-2200-100
MF-16-K	Mounting flange, plastic	7100-0030-0000-000
	For further information see last chapter!	

HYGRASGARD® RPFF
HYGRASGARD® RPFTF

Pendulum room humidity and temperature sensors (± 2.0 %), calibratable, with multi-range switching and active output

S+S REGELTECHNIK

The calibratable pendulum room humidity and temperature sensor **HYGR**ASGARD® **RPFF / RPFTF** with plastic sinter filter measures the relative humidity and temperature of air. It converts the measurands humidity and temperature into standard signals of 0 - 10 V or 4...20 mA and is available with or without an optional display. It has four switchable temperature ranges. Relative humidity (in % r. H.) is the quotient of water vapour partial pressure divided by the saturation vapour pressure at the respective gas temperature. The sensor is applied in non-aggressive dust-free atmospheres in refrigeration, air conditioning, ventilation and clean room technology, hotels, technical rooms, meeting rooms and convention centres. These measuring transducers are designed for exact detection of temperature and humidity. A digital long-term stable sensor is used as a measuring element for humidity and temperature measurement. Fine adjustment by the user is possible. The sensor is appropriate for ceiling and duct installation, or for integrating it into equipment.

RPFF
RPFTF
with plastic sinter filter (standard)



TECHNICAL DATA

Power supply:	24 V AC (± 20 %); 15...36 V DC for U variant 15...36 V DC for I variant, depending on working resistance, residual ripple stabilised ± 0.3 V
Working resistance:	R_a (ohm) = (U_b -14 V) / 0.02 A for I variant
Load resistance:	R_L > 5 kOhm for U variant
Power consumption:	< 1.1 VA / 24 V DC; < 2.2 VA / 24 V AC
Sensors:	**digital humidity sensor with integrated temperature sensor,** low hysteresis, high long-term stability
Sensor protection:	**plastic** sinter filter, Ø 16 mm, L = 35 mm, exchangeable (optional **metal** sinter filter, Ø 16 mm, L = 32 mm)
HUMIDITY	
Measuring range, humidity:	0...100 % r. H. (output corresponding to 0 -10 V or 4...20 mA)
Operating range, humidity:	0...95 % r. H. (without formation of dew)
Deviation, humidity:	typically **± 2.0** % (20...80 % r. H.) at +25 °C, otherwise ± 3.0 %
Output, humidity:	0 - 10 V for U variant 4...20 mA for I variant, see load resistance diagram
TEMPERATURE	
Measuring range, temperature:	**multi-range switching with** **4 switchable measuring ranges** (see table) –35...+35 °C; –35...+75 °C; 0...+50 °C; 0...+80 °C (output corresponding to 0 -10 V or 4...20 mA)
Operating range, temperature:	–35...+80 °C
Deviation, temperature:	typically ± 0.2 K at +25 °C
Output, temperature:	0 -10 V or 4...20 mA or Ohm value
Ambient temperature:	storage –5...+60 °C operation –5...+60 °C
Long-term stability:	± 1 % per year
Enclosure:	plastic, UV-stabilised, material polyamide, 30 % glass-globe reinforced, with quick-locking screws (slotted / Phillips head combination), colour traffic white (similar to RAL 9016), enclosure cover for display is transparent!
Enclosure dimensions:	72 x 64 x 37.8 mm (Tyr 1 without display) 72 x 64 x 43.3 mm (Tyr 1 with display)
Cable gland:	M 16 x 1.5, including strain relief, exchangeable, max. inner diameter 10.4 mm
Electrical connection:	2-, 3-, or 4-wire connection (see connecting diagram), 0.14 - 1.5 mm² via terminal screws
Connection cable:	PVC, LiYY, 6 x 0.14 mm², KL = approx. 2 m (other lengths optional)
Protective tube:	**stainless steel V2A** (1.4301), Ø = 16 mm, NL = 142 mm
Protection class:	III (according to EN 60 730)
Protection type:	IP 65 (according to EN 60 529)
Standards:	CE conformity, according to EMC directive 2014 / 30 / EU, according to EN 61326-1, according to EN 61326-2-3
Optional:	two-line **display with illumination,** cutout approx. 36 x 15 mm (W x H), for displaying ACTUAL temperature and / or ACTUAL humidity
ACCESSORIES	see last chapter

SF-M
Metal sinter filter (optional)



MF-16-K
Mounting flange, plastic (optional)



Dimensional drawing

RPFF
RPFTF

without display

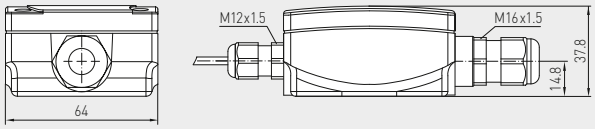

with display

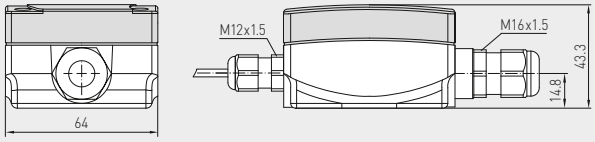

with plastic sinter filter
SF-K (standard)

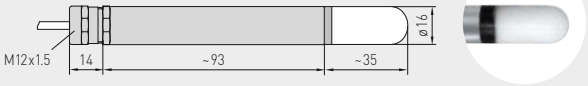

with metal sinter filter
SF-M (optional)

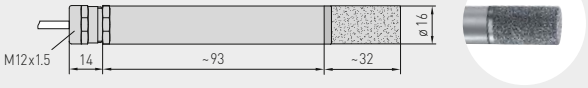

MF-16-K
(optional)

RPFF
RPFTF
with display and plastic sinter filter (standard)



Temperature table
MR: –35...+75 °C

°C	U_A in V	I_A in mA
-35	0.0	4.0
-30	0.5	4.7
-25	0.9	5.5
-20	1.4	6.2
-15	1.8	6.9
-10	2.3	7.6
-5	2.7	8.4
0	3.2	9.1
5	3.6	9.8
10	4.1	10.5
15	4.5	11.3
20	5.0	12.0
25	5.5	12.7
30	5.9	13.5
35	6.4	14.2
40	6.8	14.9
45	7.3	15.6
50	7.7	16.4
55	8.2	17.1
60	8.6	17.8
65	9.1	18.5
70	9.5	19.2
75	10.0	20.0

Temperature table
MR: –35...+35 °C

°C	U_A in V	I_A in mA
-35	0.0	4.0
-30	0.7	5.1
-25	1.4	6.3
-20	2.1	7.4
-15	2.9	8.6
-10	3.6	9.7
-5	4.3	10.9
0	5.0	12.0
5	5.7	13.1
10	6.4	14.3
15	7.1	15.4
20	7.9	16.6
25	8.6	17.7
30	9.3	18.9
35	10.0	20.0

Temperature table
MR: 0...+50 °C

°C	U_A in V	I_A in mA
0	0.0	4.0
5	1.0	5.6
10	2.0	7.2
15	3.0	8.8
20	4.0	10.4
25	5.0	12.0
30	6.0	13.6
35	7.0	15.2
40	8.0	16.8
45	9.0	18.4
50	10.0	20.0

Temperature table
MR: 0...+80 °C

°C	U_A in V	I_A in mA
0	0.0	4.0
5	0.6	5.0
10	1.3	6.0
15	1.9	7.0
20	2.5	8.0
25	3.1	9.0
30	3.8	10.0
35	4.4	11.0
40	5.0	12.0
45	5.6	13.0
50	6.3	14.0
55	6.9	15.0
60	7.5	16.0
65	8.1	17.0
70	8.8	18.0
75	9.4	19.0
80	10.0	20.0

Humidity table
MR: 0...100 % r. H.

% r.H.	U_A in V	I_A in mA
0	0.0	4.0
5	0.5	4.8
10	1.0	5.6
15	1.5	6.4
20	2.0	7.2
25	2.5	8.0
30	3.0	8.8
35	3.5	9.6
40	4.0	10.4
45	4.5	11.2
50	5.0	12.0
55	5.5	12.8
60	6.0	13.6
65	6.5	14.4
70	7.0	15.2
75	7.5	16.0
80	8.0	16.8
85	8.5	17.6
90	9.0	18.4
95	9.5	19.2
100	10.0	20.0

HYGRASGARD® RPFF
HYGRASGARD® RPFTF

Pendulum room humidity and temperature sensors (± 2.0 %), calibratable, with multi-range switching and active output

S+S REGELTECHNIK

Schematic diagram **RPFTF-U** with display

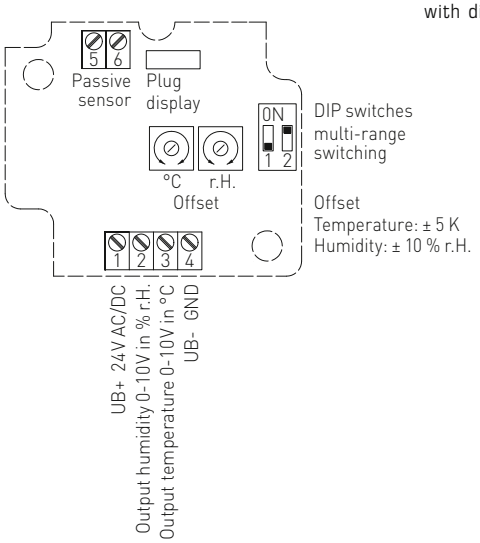

Schematic diagram** **RPFTF-I** with display

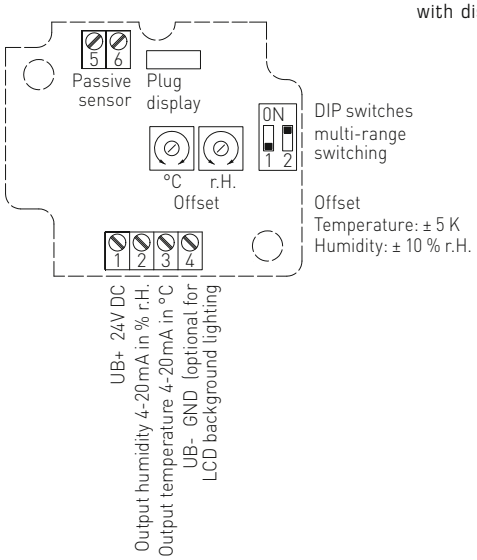

3-wire connection **RPFF-U**

1 +UB 24V AC/DC
2 Output humidity in % r.H. 0-10V
3 Free
4 –UB-GND

2- or 3-wire connection* **RPFF-I (Transmitter)**

1 +UB 24V DC
2 Output humidity in % r.H. 4-20mA
3 Free
4 –UB-GND (optional for backlighting)

4-wire connection **RPFTF-U**

1 +UB 24V AC/DC
2 Output humidity in % r.H. 0-10V
3 Output temperature in °C 0-10V
4 –UB-GND

3- or 4-wire connection** **RPFTF-I (Transmitter)**

1 +UB 24V DC
2 Output humidity in % r.H. 4-20mA
3 Output temperature in °C 4-20mA
4 –UB-GND (optional for backlighting)

Temperature measuring ranges (adjustable)	**DIP 1**	**DIP 2**
–35…+75 °C	**ON**	**ON**
–35…+35 °C	OFF	OFF
0…+50 °C (default)	OFF	**ON**
0…+80 °C	**ON**	OFF

Load resistance diagram 4…20 mA **RPFF RPFTF**

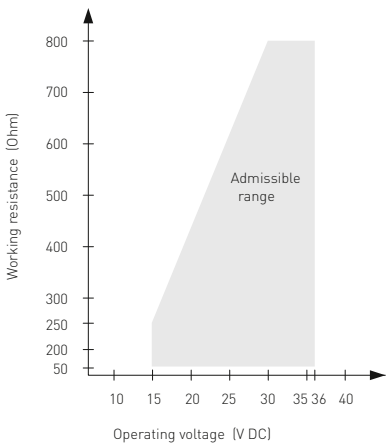

Connection*:

2-wire connection for devices with / without display (not illuminated)

3-wire connection for devices with illuminated display

Connection**:

3-wire connection for devices with / without display (not illuminated)

4-wire connection for devices with illuminated display

For the **I variant** the humidity path must be connected!

HYGRASGARD® RPFF
HYGRASGARD® RPFTF

Pendulum room humidity and temperature sensors (± 2.0 %), calibratable, with multi-range switching and active output

RPFF
RPFTF
with display



HYGRASGARD® **RPFF**	Pendulum room humidity sensors (± 2.0 %), *Premium*
HYGRASGARD® **RPFTF**	Pendulum room humidity and temperature sensors (± 2.0 %), *Premium*

Type / WG01	**Measuring Range / Readout** Humidity	Temperature	**Output** Humidity	Temperature	**Item No.**
RPFF-I					**I-variant**
RPFF-I	0...100 % r. H.	–	4...20 mA	–	1201-1172-0000-100
RPFF-U					**U-variant**
RPFF-U	0...100 % r. H.	–	0-10 V	–	1201-1171-0000-100
RPFTF-I					**I-variant**
RPFTF-I	0...100 % r. H.	–35...+75 °C –35...+35 °C 0...+50 °C 0...+80 °C	4...20 mA	4...20 mA	1201-1172-1000-100
RPFTF-U					**U-variant**
RPFTF-U	0...100 % r. H.	–35...+75 °C –35...+35 °C 0...+50 °C 0...+80 °C	0-10 V	0-10 V	1201-1171-1000-100
Extra charge:	Two-line **display with illumination** **Cable length** (KL = 2 m), other lengths optional up to max. 5 m				on request

Accessories		
SF-M	**Metal** sinter filter, Ø 16 mm, L = 32 mm, exchangeable stainless steel **V4A** (1.4404)	7000-0050-2200-100
MF-16-K	**Mounting flange,** plastic	7100-0030-0000-000
	For further information see last chapter!	

HYGRASGARD® RPFF-25
HYGRASGARD® RPFTF-25

Pendulum room humidity and temperature sensors (± 1.8 %), calibratable, with multi-range switching and active output

S+S REGELTECHNIK

The calibratable pendulum room humidity and temperature sensor **HYGR**ASGARD® **RPFF-25** / **RPFTF-25** with pluggable metal sinter filter, terminal box enclosure made of impact-resistant plastic, **with / without optional display**.
It measures the relative humidity and/or the temperature of the air and converts the measurands into a standard signal of 0-10 V or 4...20 mA. It is equipped with four switchable temperature ranges. Relative humidity (in % r. H.) is the quotient of water vapour partial pressure divided by the saturation vapour pressure at the respective gas temperature. The sensor is applied in non-aggressive dust-free atmospheres in refrigeration, air conditioning, ventilation and clean room technology, hotels, technical rooms, meeting rooms and convention centres. These measuring transducers are designed for exact detection of temperature and humidity. A digital long-term stable sensor is used as measuring element for humidity and temperature measurement. Fine adjustment by the user is possible. The sensor is appropriate for ceiling and duct installation, or for integrating it into equipment.

RPFF-25 / RPFTF-25 (± 1.8 %)
pluggable measuring head
with metal sinter filter



TECHNICAL DATA

Power supply:	24 V AC (± 20 %); 15...36 V DC for U variant 15...36 V DC for I variant, depending on working resistance, residual ripple stabilised ± 0.3 V
Working resistance:	R_a (ohm) = (U_b -14 V) / 0.02 A for I variant
Load resistance:	R_L > 5 kOhm for U variant
Power consumption:	< 1.1 VA / 24 V DC; < 2.2 VA / 24 V AC
Sensors:	**digital humidity sensor with integrated temperature sensor,** small hysteresis, high long-term stability, sensor head pluggable
Sensor protection:	**pluggable measuring head** (probe) with **metal** sinter filter, Ø 16 mm, L = 88.5 mm, exchangeable
HUMIDITY	
Measuring range, humidity:	0...100 % r. H. (output corresponding to 0-10 V or 4...20 mA)
Operating range, humidity:	0...95 % r. H. (without formation of dew)
Deviation, humidity:	typically **± 1.8** % (10...90 % r. H.) at +25 °C, otherwise ± 2.0 %
Output, humidity:	0-10 V for U variant 4...20 mA for I variant, see load resistance diagram
TEMPERATURE	
Measuring range, temperature:	**multi-range switching with** **4 switchable measuring ranges** (see table) –35...+35 °C; –35...+75 °C; 0...+50 °C; 0...+80 °C (output corresponding to 0-10 V or 4...20 mA)
Ambient temperature:	storage –35...+85 °C operation –30...+70 °C
Deviation, temperature:	typically ± 0.2 K at +25 °C
Output, temperature:	0-10 V or 4...20 mA or Ohm value
Long-term stability:	± 1 % per year
Electrical connection:	2-, 3-, or 4-wire connection (see connecting diagram), 0.14 - 1.5 mm² via terminal screws
Connection cable:	KL = 2 m
Enclosure:	plastic, UV-stabilised, material polyamide, 30 % glass-globe reinforced, with quick-locking screws (slotted / Phillips head combination), colour traffic white (similar to RAL 9016), enclosure cover for display is transparent!
Enclosure dimensions:	126 x 90 x 50 mm (Tyr 2)
Cable gland:	M 16 x 1.5, including strain relief, exchangeable, max. inner diameter 10.4 mm
Protective tube:	**stainless steel V2A** (1.4301), Ø = 18 mm (16 mm), L = 120 mm
Protection class:	III (according to EN 60 730)
Protection type:	IP 65 (according to EN 60 529)
Standards:	CE conformity, according to EMC directive 2014 / 30 / EU, according to EN 61326-1, according to EN 61326-2-3
Optional:	three-line **display with illumination,** cutout approx. 70 x 40 mm (W x H), for displaying ACTUAL temperature and / or ACTUAL humidity
ACCESSORIES	see last chapter

MF-16-K
Mounting flange,
plastic
(optional)



HYGRASGARD® RPFF-25
HYGRASGARD® RPFTF-25

Pendulum room humidity and temperature sensors (± 1.8 %), calibratable, with multi-range switching and active output

Dimensional drawing — **RPFF-25 / RPFTF-25**

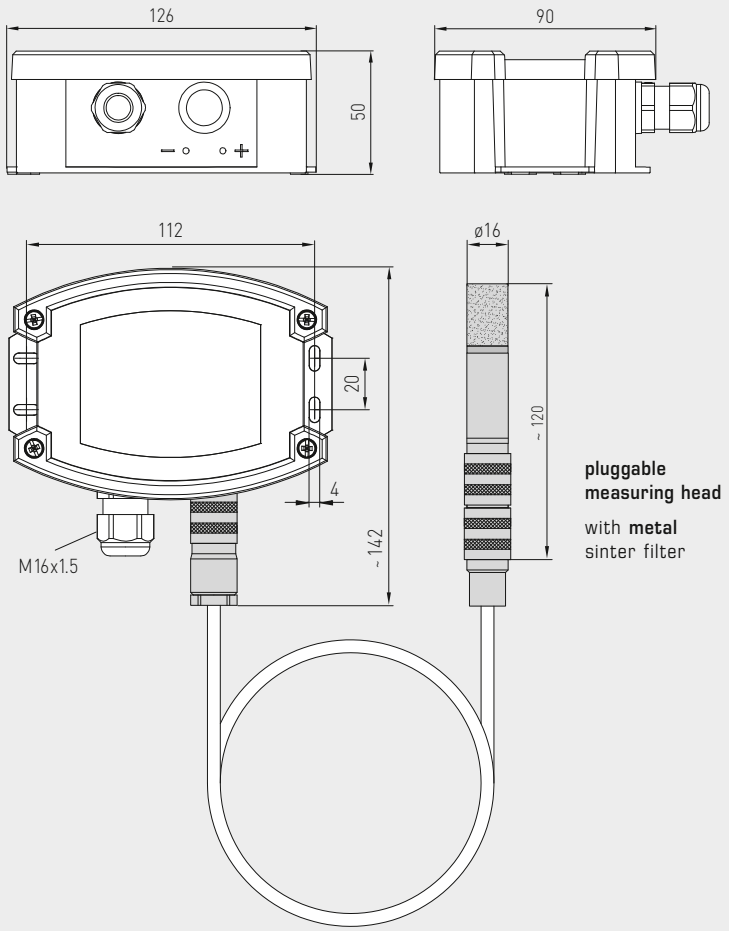

RPFF-25 / RPFTF-25 (± 1.8 %)
pluggable measuring head
with metal sinter filter and display



Temperature table
MR: –35...+75 °C

°C	U_A in V	I_A in mA
-35	0.0	4.0
-30	0.5	4.7
-25	0.9	5.5
-20	1.4	6.2
-15	1.8	6.9
-10	2.3	7.6
-5	2.7	8.4
0	3.2	9.1
5	3.6	9.8
10	4.1	10.5
15	4.5	11.3
20	5.0	12.0
25	5.5	12.7
30	5.9	13.5
35	6.4	14.2
40	6.8	14.9
45	7.3	15.6
50	7.7	16.4
55	8.2	17.1
60	8.6	17.8
65	9.1	18.5
70	9.5	19.2
75	10.0	20.0

Temperature table
MR: –35...+35 °C

°C	U_A in V	I_A in mA
-35	0.0	4.0
-30	0.7	5.1
-25	1.4	6.3
-20	2.1	7.4
-15	2.9	8.6
-10	3.6	9.7
-5	4.3	10.9
0	5.0	12.0
5	5.7	13.1
10	6.4	14.3
15	7.1	15.4
20	7.9	16.6
25	8.6	17.7
30	9.3	18.9
35	10.0	20.0

Temperature table
MR: 0...+50 °C

°C	U_A in V	I_A in mA
0	0.0	4.0
5	1.0	5.6
10	2.0	7.2
15	3.0	8.8
20	4.0	10.4
25	5.0	12.0
30	6.0	13.6
35	7.0	15.2
40	8.0	16.8
45	9.0	18.4
50	10.0	20.0

Temperature table
MR: 0...+80 °C

°C	U_A in V	I_A in mA
0	0.0	4.0
5	0.6	5.0
10	1.3	6.0
15	1.9	7.0
20	2.5	8.0
25	3.1	9.0
30	3.8	10.0
35	4.4	11.0
40	5.0	12.0
45	5.6	13.0
50	6.3	14.0
55	6.9	15.0
60	7.5	16.0
65	8.1	17.0
70	8.8	18.0
75	9.4	19.0
80	10.0	20.0

Humidity table
MR: 0...100 % r. H.

% r.H.	U_A in V	I_A in mA
0	0.0	4.0
5	0.5	4.8
10	1.0	5.6
15	1.5	6.4
20	2.0	7.2
25	2.5	8.0
30	3.0	8.8
35	3.5	9.6
40	4.0	10.4
45	4.5	11.2
50	5.0	12.0
55	5.5	12.8
60	6.0	13.6
65	6.5	14.4
70	7.0	15.2
75	7.5	16.0
80	8.0	16.8
85	8.5	17.6
90	9.0	18.4
95	9.5	19.2
100	10.0	20.0

HYGRASGARD® RPFF-25
HYGRASGARD® RPFTF-25

Pendulum room humidity and temperature sensors (± 1.8 %), calibratable, with multi-range switching and active output

S+S REGELTECHNIK

Schematic diagram — **RPFTF-25-U** with display

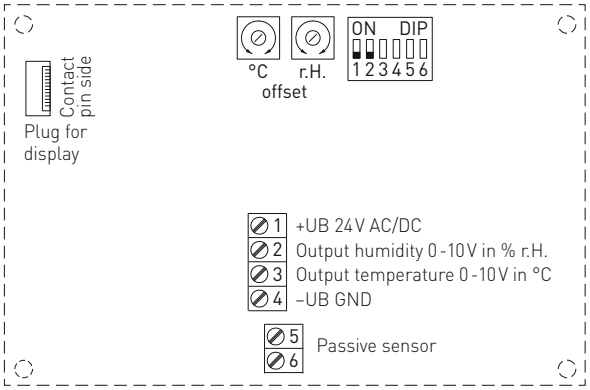

DIP 3, 4, 5, 6 are not assigned!

Schematic diagram** — **RPFTF-25-I** with display

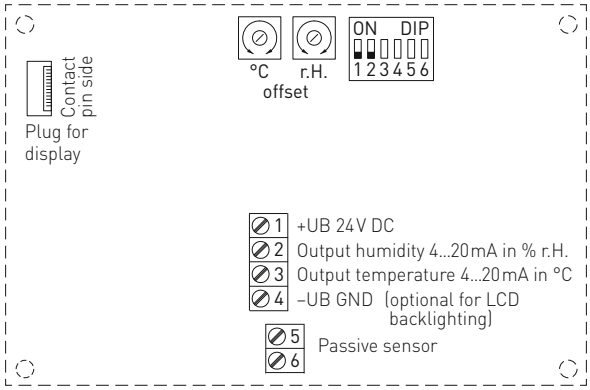

DIP 3, 4, 5, 6 are not assigned!

3-wire connection — **RPFF-25-U**

1 +UB 24V AC/DC
2 Output humidity in % r.H. 0-10V
3 Free
4 –UB-GND

2- or 3-wire connection* — **RPFF-25-I (Transmitter)**

1 +UB 24V DC
2 Output humidity in % r.H. 4-20mA
3 Free
4 –UB-GND (optional for backlighting)

4-wire connection — **RPFTF-25-U**

1 +UB 24V AC/DC
2 Output humidity in % r.H. 0-10V
3 Output temperature in °C 0-10V
4 –UB-GND

3- or 4-wire connection** — **RPFTF-25-I (Transmitter)**

1 +UB 24V DC
2 Output humidity in % r.H. 4-20mA
3 Output temperature in °C 4-20mA
4 –UB-GND (optional for backlighting)

Temperature measuring ranges (adjustable)	**DIP 1**	**DIP 2**
–35...+75 °C	**ON**	**ON**
–35...+35 °C	OFF	OFF
0...+50 °C (default)	OFF	**ON**
0...+80 °C	**ON**	OFF

Load resistance diagram 4..20 mA — **RPFF-25** **RPFTF-25**

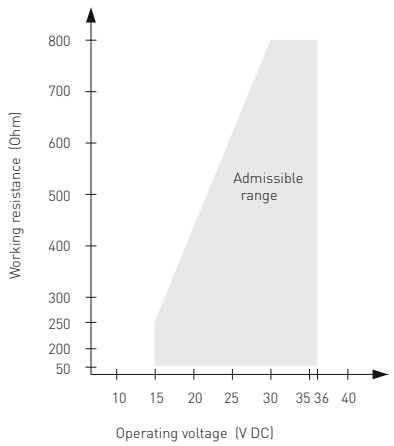

Connection*:

2-wire connection for devices with / without display (not illuminated)

3-wire connection for devices with illuminated display

Connection**:

3-wire connection for devices with / without display (not illuminated)

4-wire connection for devices with illuminated display

For the **I variant** the humidity path must be connected!

HYGRASGARD® RPFF-25
HYGRASGARD® RPFTF-25

Pendulum room humidity and temperature sensors (± 1.8 %), calibratable, with multi-range switching and active output

RPFF-25 / RPFTF-25 (± 1.8 %)
with display



HYGRASGARD® RPFF-25	Pendulum room humidity sensors, pluggable (± 1.8 %), *Deluxe*
HYGRASGARD® RPFTF-25	Pendulum room humidity and temperature sensors, pluggable (± 1.8 %), *Deluxe*

Type / WG02	**Measuring Range / Readout** Humidity	Temperature	**Output** Humidity	Temperature	**Display**	**Item No.**
RPFF-25-I						**I-variant**
RPFF-25-I	0...100 % r. H.	–	4...20 mA	–		1201-7122-0000-100
RPFF-25-I DISPLAY	0...100 % r. H.	–	4...20 mA	–	■	1201-7122-0400-100
RPFF-25-U						**U-variant**
RPFF-25-U	0...100 % r. H.	–	0-10 V	–		1201-7121-0000-100
RPFF-25-U DISPLAY	0...100 % r. H.	–	0-10 V	–	■	1201-7121-0400-100
RPFTF-25-I						**I-variant**
RPFTF-25-I	0...100 % r. H.	–35...+75 °C –35...+35 °C 0...+50 °C 0...+80 °C	4...20 mA	4...20 mA		1201-7122-1000-100
RPFTF-25-I DISPLAY	0...100 % r. H.	(4x as above)	4...20 mA	4...20 mA	■	1201-7122-1400-100
RPFTF-25-U						**U-variant**
RPFTF-25-U	0...100 % r. H.	–35...+75 °C –35...+35 °C 0...+50 °C 0...+80 °C	0-10 V	0-10 V		1201-7121-1000-100
RPFTF-25-U DISPLAY	0...100 % r. H.	(4x as above)	0-10 V	0-10 V	■	1201-7121-1400-100

Accessories		
MSK-25	Pluggable **measuring head** (sensor), stainless steel **V2A** (1.4301), **metal** sinter filter, Ø 16 mm, L = 88.5 mm, exchangeable, as replacement element for **RPFF-25 / RPFTF-25**	7201-1131-0000-000
MF-16-K	**Mounting flange,** plastic	7100-0030-0000-000
	For further information see last chapter!	

HYGRASGARD® VFF
HYGRASGARD® VFTF

Showcase humidity and temperature sensors (± 2.0 %), calibratable, with multi-range switching and active output

S+S REGELTECHNIK

The calibratable humidity and temperature sensor **HYGR**ASGARD® **VFF / VFTF** measures the relative humidity and temperature of air. It converts the measurands humidity and temperature into a standard signal of 0 - 10 V or 4...20 mA, and is available with / without an optional display. It is equipped with four switchable temperature ranges. Relative humidity (in % r.H.) is the quotient of water vapour partial pressure divided by the saturation vapour pressure at the respective gas temperature. The measuring transducers are designed for exact detection of temperature and humidity. A digital, long-term stable sensor is used as a measuring element for humidity and temperature measurement. Fine adjustment by the user is possible.

The showcase sensor is used in non-aggressive, dust-free environments and is specifically designed for installation in ceilings, walls, inside showcases or display cabinets in museums, galleries, cinemas or lecture halls or laboratories. The measuring element is contained inside a stainless steel probe and its low height (approx. 2.5 mm) makes it barely noticeable.

VFF
VFTF



TECHNICAL DATA

Power supply:	24 V AC (± 20 %) and 15...36 V DC for U variant 15...36 V DC for I variant, depending on working resistance, residual ripple stabilised ± 0.3 V
Working resistance:	R_a (Ohm) = (U_b -14 V) / 0.02 A for I variant
Load resistance:	R_L > 5 kOhm for U variant
Power consumption:	< 1.1 VA / 24 V DC; < 2.2 VA / 24 V AC
Sensors:	**digital humidity sensor with integrated temperature sensor,** low hysteresis, high long-term stability
HUMIDITY	
Measuring range, humidity:	0...100 % r.H. (output corresponding to 0 - 10 V or 4...20 mA)
Operating range, humidity:	0..95 % r. H. (without formation of dew)
Deviation in humidity:	typically **± 2.0** % (20...80 % r. H.) at +25 °C, otherwise ± 3.0 %
Output, humidity:	0 - 10 V for U variant 4...20 mA for I variant, see load resistance diagram
TEMPERATURE	
Measuring range, temperature:	**multi-range switching with** **4 switchable measuring ranges** (see table) –35...+35 °C; –35...+75 °C; 0...+50 °C; 0...+80 °C (output corresponding to 0 - 10 V or 4...20 mA)
Deviation, temperature:	typically ± 0.2 K at +25 °CC
Output, temperature:	0 - 10 V or 4...20 mA
Ambient temperature:	storage –5...+60 °C; operation –5...+60 °C
Long-term stability:	± 1 % per year
Enclosure:	plastic, UV-stabilised, material polyamide, 30 % glass-globe reinforced, with quick-locking screws (slotted / Phillips head combination), colour traffic white (similar to RAL 9016), enclosure cover for display is transparent!
Enclosure dimensions:	72 x 64 x 37.8 mm (Tyr 1 without display) 72 x 64 x 43.3 mm (Tyr 1 with display)
Cable gland:	M 16 x 1.5 ; including strain relief, exchangeable, max. inner diameter 10.4 mm
Electrical connection:	2-, 3-, or 4-wire connection (see connecting diagram), 0.14 - 1.5 mm², via terminal screws
Connecting cable:	PVC, LiYY, 4 x 0.14 mm², cable length (KL) = 2 m
Sensor protection:	**probe** made of stainless steel, **V4A** (1.4571), **pluggable**; sensor head Ø = 17 mm, H = approx. 2.5 mm; protective sleeve Ø = 10 mm, NL = approx. 25 mm, M10 x 1.0; with plastic plug connector Ø = approx. 11 mm, NL = approx. 25 mm,
Mounting (sensor):	cut-out Ø = 11 - 15 mm, inserted length (EL) = approx. 50 mm, lock nut for fixing is included in the scope of delivery.
Protection class:	III (according to EN 60 730)
Protection type:	IP 65 (according to EN 60 529)
Standards:	CE conformity according to EMC Directive 2014 / 30 / EU, according to EN 61326-1, according to EN 61326-2-3
Optional:	two-line **display with illumination**, cut-out approx. 36 x 15 mm (W x H), for displaying ACTUAL temperature and / or ACTUAL humidity

VFF
VFTF
Probe made of stainless steel, pluggable



Dimensional drawing

VFF
VFTF

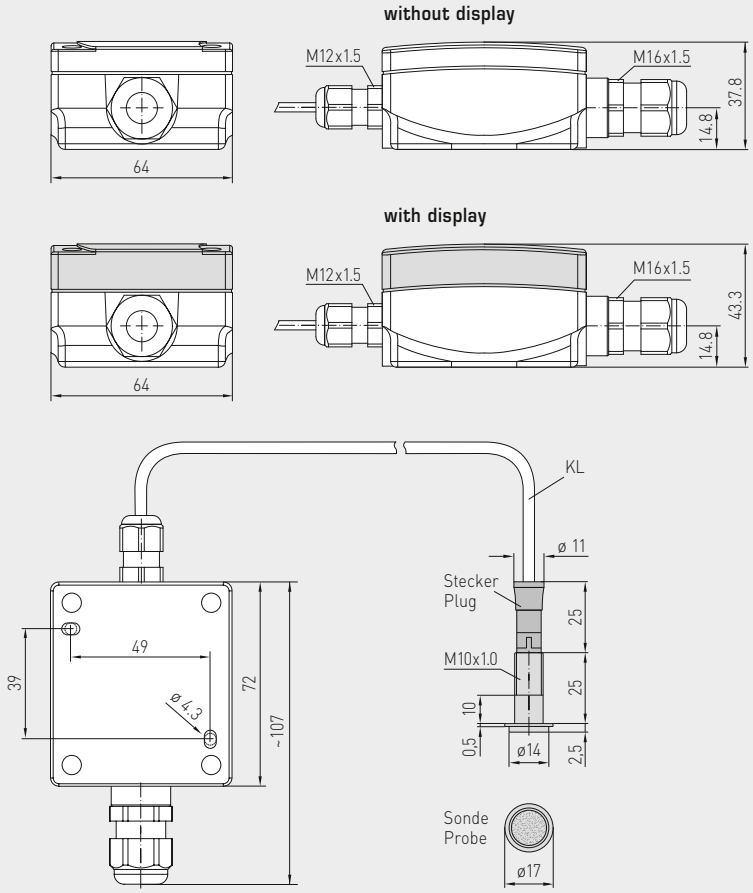

VFF
VFTF
with display



Temperature table
MR: –35...+75 °C

°C	U_A in V	I_A in mA
-35	0.0	4.0
-30	0.5	4.7
-25	0.9	5.5
-20	1.4	6.2
-15	1.8	6.9
-10	2.3	7.6
-5	2.7	8.4
0	3.2	9.1
5	3.6	9.8
10	4.1	10.5
15	4.5	11.3
20	5.0	12.0
25	5.5	12.7
30	5.9	13.5
35	6.4	14.2
40	6.8	14.9
45	7.3	15.6
50	7.7	16.4
55	8.2	17.1
60	8.6	17.8
65	9.1	18.5
70	9.5	19.2
75	10.0	20.0

Temperature table
MR: –35...+35 °C

°C	U_A in V	I_A in mA
-35	0.0	4.0
-30	0.7	5.1
-25	1.4	6.3
-20	2.1	7.4
-15	2.9	8.6
-10	3.6	9.7
-5	4.3	10.9
0	5.0	12.0
5	5.7	13.1
10	6.4	14.3
15	7.1	15.4
20	7.9	16.6
25	8.6	17.7
30	9.3	18.9
35	10.0	20.0

Temperature table
MR: 0...+50 °C

°C	U_A in V	I_A in mA
0	0.0	4.0
5	1.0	5.6
10	2.0	7.2
15	3.0	8.8
20	4.0	10.4
25	5.0	12.0
30	6.0	13.6
35	7.0	15.2
40	8.0	16.8
45	9.0	18.4
50	10.0	20.0

Temperature table
MR: 0...+80 °C

°C	U_A in V	I_A in mA
0	0.0	4.0
5	0.6	5.0
10	1.3	6.0
15	1.9	7.0
20	2.5	8.0
25	3.1	9.0
30	3.8	10.0
35	4.4	11.0
40	5.0	12.0
45	5.6	13.0
50	6.3	14.0
55	6.9	15.0
60	7.5	16.0
65	8.1	17.0
70	8.8	18.0
75	9.4	19.0
80	10.0	20.0

Humidity table
MR: 0...100 % r. H.

% r.H.	U_A in V	I_A in mA
0	0.0	4.0
5	0.5	4.8
10	1.0	5.6
15	1.5	6.4
20	2.0	7.2
25	2.5	8.0
30	3.0	8.8
35	3.5	9.6
40	4.0	10.4
45	4.5	11.2
50	5.0	12.0
55	5.5	12.8
60	6.0	13.6
65	6.5	14.4
70	7.0	15.2
75	7.5	16.0
80	8.0	16.8
85	8.5	17.6
90	9.0	18.4
95	9.5	19.2
100	10.0	20.0

HYGRASGARD® VFF
HYGRASGARD® VFTF

Showcase humidity and temperature sensors (± 2.0 %), calibratable, with multi-range switching and active output

S+S REGELTECHNIK

Schematic diagram **VFTF-U** with display

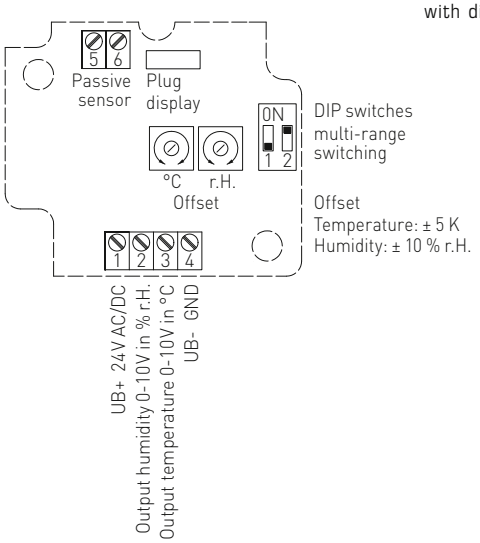

Schematic diagram** **VFTF-I** with display

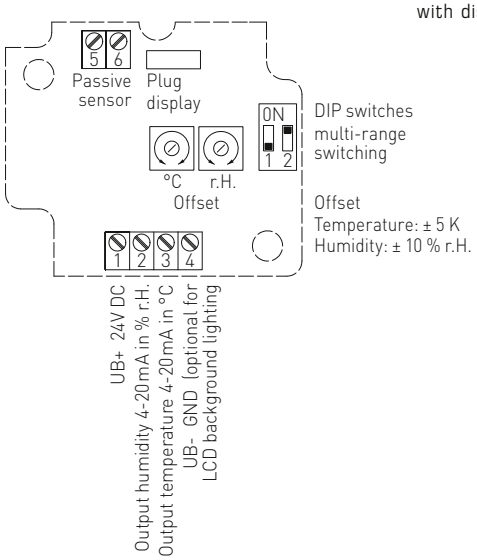

3-wire connection **VFF-U**

1	+UB 24V AC/DC
2	Output humidity in % r.H. 0-10V
3	Free
4	–UB-GND

2- or 3-wire connection* **VFF-I (Transmitter)**

1	+UB 24V DC
2	Output humidity in % r.H. 4-20mA
3	Free
4	–UB-GND (optional for backlighting)

4-wire connection **VFTF-U**

1	+UB 24V AC/DC
2	Output humidity in % r.H. 0-10V
3	Output temperature in °C 0-10V
4	–UB-GND

3- or 4-wire connection** **VFTF-I (Transmitter)**

1	+UB 24V DC
2	Output humidity in % r.H. 4-20mA
3	Output temperature in °C 4-20mA
4	–UB-GND (optional for backlighting)

Temperature measuring ranges (adjustable)	**DIP 1**	**DIP 2**
–35…+75 °C	**ON**	**ON**
–35…+35 °C	OFF	OFF
0…+50 °C (default)	OFF	**ON**
0…+80 °C	**ON**	OFF

Load resistance diagram 4…20 mA **VFF VFTF**

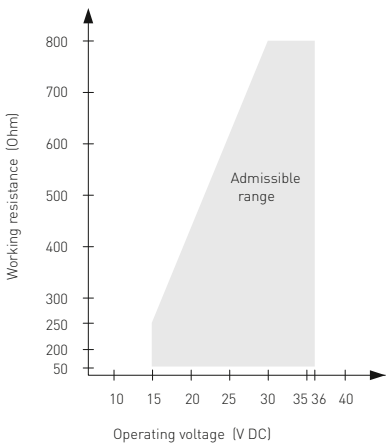

Connection*:

2-wire connection for devices with / without display (not illuminated)

3-wire connection for devices with illuminated display

Connection**:

3-wire connection for devices with / without display (not illuminated)

4-wire connection for devices with illuminated display

For the **I variant** the humidity path must be connected!

VFF
VFTF
with display



HYGRASGARD® **VFF** Showcase humiditysensor (± 2.0 %), *Premium* **HYGR**ASGARD® **VFTF** Showcase humidity- and temperature sensor (± 2.0 %), *Premium*						
Type / WG02	**Measuring Range / Readout** Humidity	Temperature	**Output** Humidity	Temperature	**Display**	**Item No.**
VFF-I						**I-variant**
VFF-I	0...100 % r. H.	–	4...20 mA	–		1201-6122-0000-100
VFF-I DISPLAY	0...100 % r. H.	–	4...20 mA	–	■	1201-6122-0200-100
VFF-U						**U-variant**
VFF-U	0...100 % r. H.	–	0-10 V	–		1201-6121-0000-100
VFF-U DISPLAY	0...100 % r. H.	–	0-10 V	–	■	1201-6121-0200-100
VFTF-I						**I-variant**
VFTF-I	0...100 % r. H.	–35...+75 °C –35...+35 °C 0...+50 °C 0...+80 °C	4...20 mA	4...20 mA		1201-6122-1000-100
VFTF-I DISPLAY	0...100 % r. H.	(4x as above)	4...20 mA	4...20 mA	■	1201-6122-1200-100
VFTF-U						**U-variant**
VFTF-U	0...100 % r. H.	–35...+75 °C –35...+35 °C 0...+50 °C 0...+80 °C	0-10 V	0-10 V		1201-6121-1000-100
VFTF-U DISPLAY	0...100 % r. H.	(4x as above)	0-10 V	0-10 V	■	1201-6121-1200-100

**Room hygro-thermostat,
mechanical, one-step**

S+S REGELTECHNIK

The mechanical room hygro-thermostat **HYGR**ASREG® **RHT**, a room hygrostat with (bimetal) temperature controller, is used for controlling and monitoring the relative humidity (humidifying and dehumidifying) and the temperature in office and residential rooms, baths, winter gardens, labs, computer rooms, etc. RHT is applied in dust-free, pollutant-free, non-aggressive air.

RHT



TECHNICAL DATA

	HYGROSTAT
Switching capacity: (Contact load)	24…230 V AC > 24 V in dry rooms only according to VDE 0110 Dehumidifying: 5 (0.2) A, min. 100 mA Humidifying: 3 (0.2) A, min. 100 mA
Setting range:	35…100 % r. H.
Contact:	2 changeover contact
Sensor element:	plastic fibres
Tolerance:	max. 3 % r. H.
Operating difference:	approx. 4 % r. H.
Enclosure temperature:	0…+60 °C
FUNCTION:	Humidifying: wire terminals 5 and 6 Dehumidifying: wire terminals 5 and 7

	THERMOSTAT
Switching capacity:	10 (4) A, 24 / 230V AC
Control range:	+10…+35 °C
Contact:	1 changeover contact (potential-free)
Sensor element:	bimetal, with thermal feedback
FUNCTION:	Heating: wire terminals 2 and 5 Cooling: wire terminals 3 and 5

Enclosure:	plastic, material ABS, colour pure white (similar to RAL 9010)
Dimensions:	127.5 x 75 x 28.6 mm
Installation:	wall mounting or on in-wall flush box, Ø 55 mm
Electrical connection:	0.14 - 2.5 mm², via terminal screws
Protection class:	II (according to EN 60 730)
Protection type:	IP 30 (according to EN 60 529)
Standards:	CE conformity, EMC directive 2014 / 30 / EU, low-voltage directive 2014 / 35 / EU
ACCESSORIES	When mounting indoor room enclosures on in-wall flush boxes with horizontal fixing holes, adapter frame **ARA 1.7 E** must be included in the order.

Dimensional drawing **RHT**

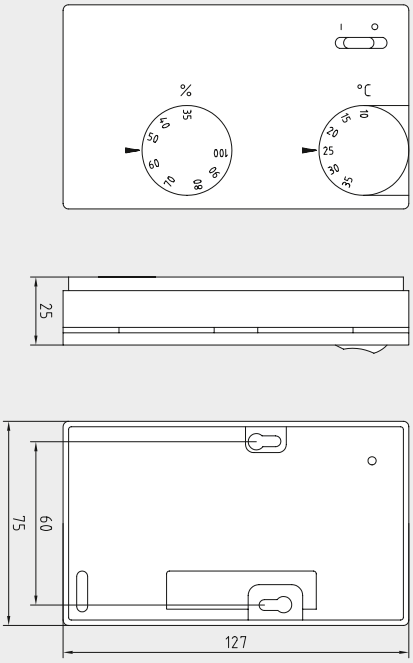

Connecting diagram **RHT**

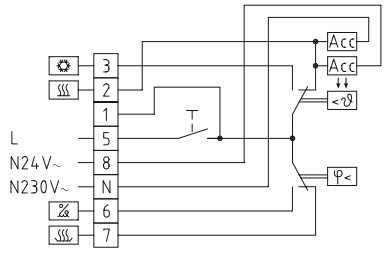

HYGRASREG® RHT Room hygro-thermostat

Type / WG02	Setting Range Humidity	Temperature	Steps	Features	Item No.
RHT					**External setting**
RHT-1	35…100 % r. H.	+10…+35 °C	one-step	main switch	1202-4010-0000-000
Accessories					
ARA 1,7 E	Adapter frame for in-wall flush boxes				7100-0060-4000-000

Mechanical room hygrostat **HYGR**ASREG® **RH-2** with switching output (with single-pole microswitch as two-position controller with humidity sensor) working without external voltage, with humidity measuring element made of stabilized synthetic gauze, optional with setpoint setter for switchpoint adjustment (external or internal setting) in an elegant enclosure made of plastic, with snap-on lid, base with 4-hole attachment for installation on vertically or horizontally installed in-wall flush boxes, with predetermined breaking point for on-wall cable entry. RH-2 is used for controlling and monitoring the relative humidity in office and residential rooms, baths, labs, control cabinets, computer rooms, etc., as minimum or maximum hygrostat. It is used in dust-free, pollutant-free, non-aggressive air.

RH-2
(with external setting)



RH-2U
(with internal setting)



TECHNICAL DATA

Switching capacity: (Contact load)	24 V AC/DC dehumidifying: 5 (0.2) A, min. 100 mA humidifying: 3 (0.2) A, min. 100 mA
Setting range:	25 ...95 % r. H.
Contact:	1 changeover contact
Sensor element:	plastic fibres
Operating difference:	approx. 4 % r. H.
Tolerance:	max. 3 % r. H.
Enclosure temperature:	0...+40 °C
Enclosure:	plastic, material ABS, colour pure white (similar to RAL 9010)
Dimensions:	98 x 98 x 39 mm (Baldur 2, with Potentiometer)
Electrical connection:	0.14 - 2.5 mm², via terminal screws
Installation:	wall mounting or on in-wall flush box Ø 55 mm, base with 4-hole for mounting on vertically or horizontally installed in-wall flush boxes for cable entry from the back, with predetermined breaking point for on-wall cable entry from top / bottom in case of plain on-wall installation
Protection class:	III (according to EN 60 730)
Protection type:	IP 30 (according to EN 60 529)
Standards:	CE conformity, EMC directive 2014 / 30 / EU, low-voltage directive 2014 / 35 / EU
FUNCTION:	humidifying: wire terminals 1 and 3 dehumidifying: wire terminals 1 and 2

Dimensional drawing

Enclosure **Baldur 2**
RH-2

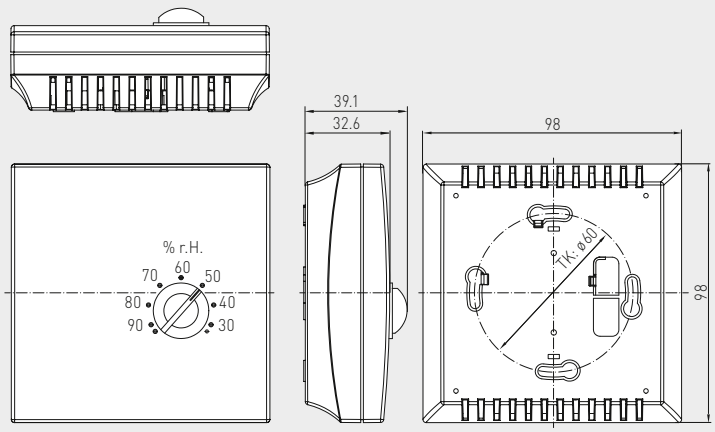

Connecting diagram **RH-2**

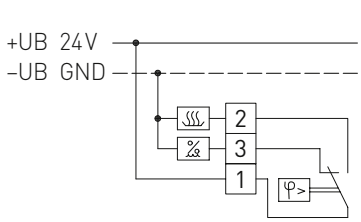

HYGRASREG® RH-2 Room hygrostat, *Standard*

Type / WG01	Setting Range Humidity	Hysteresis	Output	Steps	Item No.
RH-2					**External setting**
RH-2	25...95 % r. H.	approx. 4 % r. H.	1x Changeover contact	one-step	1202-40C0-0010-000
RH-2 U					**Internal setting**
RH-2 U	25...95 % r. H.	approx. 4 % r. H.	1x Changeover contact	one-step	1202-40C0-0020-000

HYGRASREG® RHT - 30

Room hygrostats and humidity and temperature sensors (± 2.0 %), electronic, two-step, with continuous / switching outputs

S+S REGELTECHNIK

Electronic room hygrostat and/or room thermostat **HYGR**ASREG® **RHT-30** with one continuous and two switching outputs, adjustable switching thresholds, with / without optional display for indicating ACTUAL humidity and/or ACTUAL temperature (accuracy class ± 2.0 % r.H.).
The setpoints can be allocated to the relative humidity and/or to the temperature.

It is suitable for regulating and monitoring relative humidity (humidifying and dehumidifying) and/or the temperature (heating and cooling), e.g. in ventilation and air conditioning ducts, laboratories, production facilities, climatic test cabinets, indoor swimming pools, greenhouses, etc., to control humidifying and dehumidifying equipment or heating system control. The measuring transducers are designed for exact humidity/temperature measurement. The RHT-30 uses a digital, long-term stable sensor as a measuring element. It is used in dust-free, unpolluted, non-aggressive air.

TECHNICAL DATA

Power supply:	24 V AC (± 20 %), 15...36 V DC
Load resistance:	R_L > 5 kOhm
Power consumption:	< 1,5 VA / 24 V DC, < 3,5 VA / 24 V AC
Sensor:	**digital humidity sensor with integrated temperature sensor,** low hysteresis, high long-term stability
Setting range:	5...95 % r.H. (Humidity) +5...+ 45 °C (Temperature) (switch steps 1 and 2 are separately adjustable)
Operating difference:	**Mode 1:** both switch steps are freely adjustable (rel. humidity) **Mode 2:** 5 % between both switch steps (rel. humidity) **Mode 3:** both switch steps freely adjustable (temperature) **Mode 4:** switch step 1 (temperature), switch step 2 (rel. humidity) (adjustable via DiP switches)
Output:	potential-free changeover contacts (2 x changeover contact 24 V, 1A ohmic load, separately adjustable, 1x 0 - 10 V)
Deviation, humidity:	typically **± 2.0** % (20...80 % r. H.) at +25 °C, otherwise ± 3.0 %
Deviation, temperature:	typically **± 0.2 K** at +25 °C
Ambient temperature:	storage –35...+85 °C; operation – 30...+70 °C, non-precipitating
Long-term stability:	± 1 % per year
Enclosure:	plastic, material ABS, colour pure white (similar to RAL 9010)
Enclosure dimensions:	98 x 98 x 35 mm (Baldur 2)
Installation:	wall mounting or on in-wall flush box, Ø 55 mm, base with 4-hole for mounting on vertically or horizontally installed in-wall flush boxes for cable entry from the back, with predetermined breaking point for on - wall cable entry from top / bottom in case of plain on - wall installation
Protection class:	III (according to EN 60 730)
Protection type:	IP 30 (according to EN 60 529)
Electrical connection:	0.14 - 1.5 mm², via terminal screws
Standards:	CE conformity, EMC directive 2014 / 30 / EU
Optional:	two-line **display with illumination,** cutout approx. 36 x 15 mm (W x H), for displaying ACTUAL humidity and/or ACTUAL temperature respectively for setpoint adjustment
FUNCTION	
Humidifying/heating:	**1st step:** wire contacts 11 - 12. If actual humidity falls more than 3 % r.H. / 1 K (hysteresis) below switching threshold S1, the changeover contact switches to 11 - 12. **2. step:** wire contacts 21 - 22. If actual humidity falls more than 3 % r.H. / 1 K (hysteresis) below switching threshold S2, the changeover contact switches to 21 - 22. Terminal 2: output relative humidity / temperature
Dehumidifying/cooling:	**1st step:** wire contacts 11 - 13. When actual humidity exceeds switching threshold S1, the changeover contact switches to 11 - 13. **2. step:** wire contacts 21 - 23. When actual humidity exceeds switching threshold S 2, the changeover contact switches to 21 - 23. Terminal 2: output relative humidity / temperature

The **1st line** of the display shows the **ACTUAL humidity** in % r.H. and the **ACTUAL temperature** in °C.
The displays showing the ACTUAL values alternate in a 3-second rhythm.
Resolution: 1/10 % r.H. or 1/10 °C.

The **2nd line** shows information about the **switching status of the relay** (as a circuit), and indicates the **switching value** in % r.H. or °C (adjustable via the corresponding set potentiometer). The readouts of the switching thresholds for the first and second relay are displayed alternately at an interval of twenty seconds.

For improved legibility, backlighting is provided.

Display readout **RHT-30**



Dimensional drawing

RHT-30U

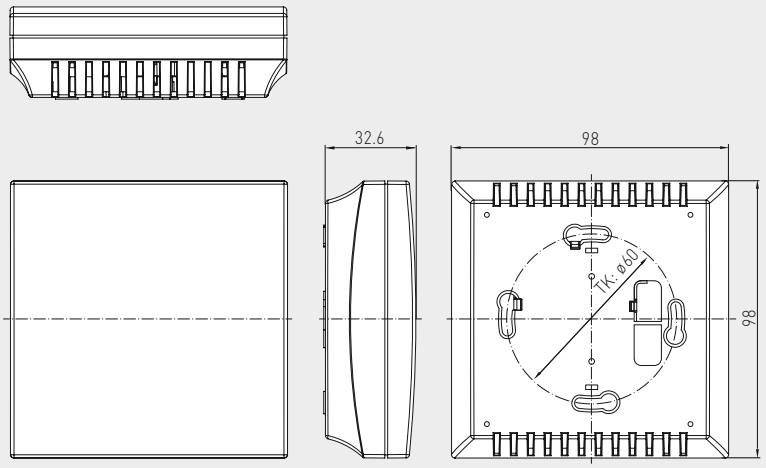

RHT-30U
with internal setting



Dimensional drawing

RHT-30

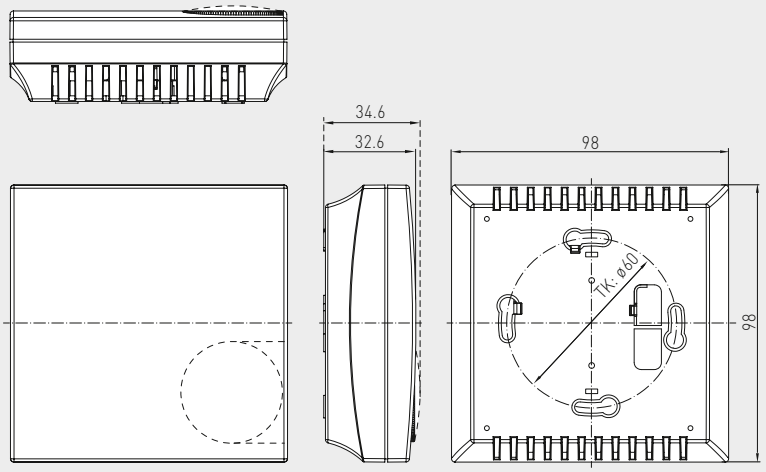

RHT-30



RHT-30
with display



Room hygrostats and humidity and temperature sensors (±2.0%), electronic, two-step, with continuous / switching outputs

S+S REGELTECHNIK

Schematic diagram **RHT-30**

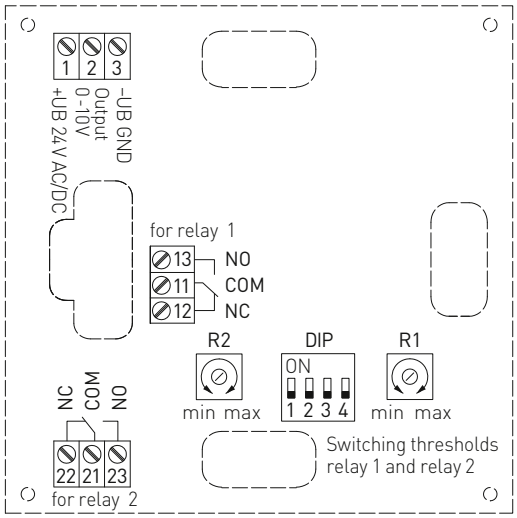

DIP switches	RHT-30	
Function mode	**DIP 1**	**DIP 2**
Mode 1 (**2x** 5...95% r.H.) (default)	OFF	OFF
Mode 2 (5...95% r.H. **+ 5%** r.H.)	**ON**	OFF
Mode 3 (**2x** +5...+45 °C)	OFF	**ON**
Mode 4 (5...95% r.H. / +5...+45 °C)	**ON**	**ON**
Output		**DIP 3**
Temperature		**ON**
Relative humidity (default)		OFF
Backlighting		**DIP 4**
activated		**ON**
deactivated (default)		OFF

Connecting diagram **RHT-30**

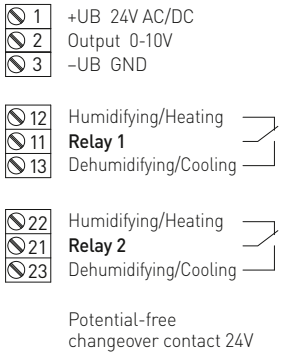

Supply	AC	DC
→ **1**	24 V~	24 V DC
→ **3**	0 V	GND

12	(A1) →	**Relay 1** Breaker contact
11	(W1) →	**Relay 1** Changeover contact
13	(B1) →	**Relay 1** Normally open contact

22	(A2) →	**Relay 2** Breaker contact
21	(W2) →	**Relay 2** Changeover contact
23	(B2) →	**Relay 2** Normally open contact

Switching output **RHT-30**

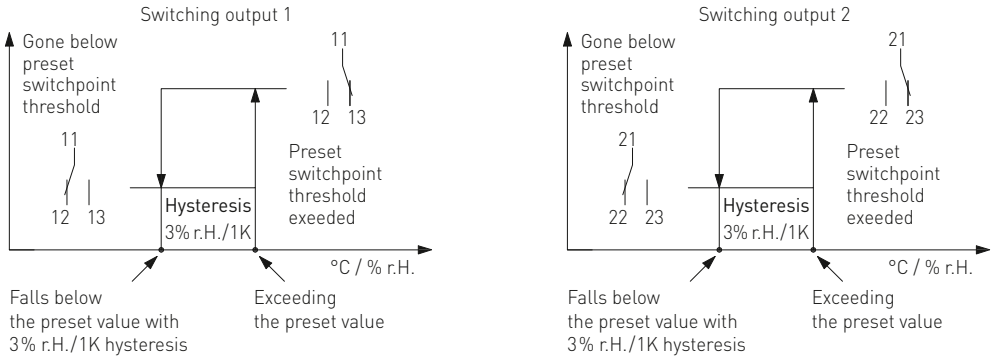

Mode 1: Independent switchpoints for both relay outputs can be defined in the range of 5...95% r.H. by the control knobs (setpoint 1 for relay 1, setpoint 2 for relay 2, see schematic diagram). When the respective switchpoint is exceeded, the corresponding relay switches over (changeover contact 1 switches from position 2 to position 3). When the pre-set switchpoint is undershot again by more than 3% r.H. (hysteresis), the respective switching output switches back to the initial position (changeover contact 1 switches from position 3 to position 2).

Mode 2: In Mode 2, only control knob setpoint 1 is active (setpoint 2 without function)! The switchpoint for the first relay is defined in the range of 5...95% r.H. by the control knob setpoint 1 (see schematic diagram). The switchpoint for the second relay output is invariably defined in mode 2 as "Switchpoint 1 + 5% r.H.". Hysteresis of 3% r.H. is also predefined for each switching output in mode 2.

Mode 3: Independent switchpoints for both relay outputs can be defined in the range of +5...+45 °C r.H. by the control knobs (setpoint 1 for relay 1, setpoint 2 for relay 2). If the respective switchpoint is exceeded, the corresponding relay switches over. If the pre-set threshold value is undershot again by 1 K (hysteresis), the respective switching output switches back to the initial position. The thresholds of the setting range (temperature) are 5 °C above the minimum or below the maximum range value respectively.

Mode 4: In mode 4, the control knob is allocated to setpoint 1 of the temperature, while control knob is allocated to setpoint 2 of the relative humidity. The switchpoints can be adjusted in the range of +5...+45 °C or 5...95% r.H. The thresholds of the setting range (temperature) are 5°C above the minimum or below the maximum range value respectively. The control knob for the temperature can be operated from outside, if necessary.

Humidity table
MR: 0 ...100 % r. H.

% r.H.	U_A in V	% r.H.	U_A in V
0	0.0	**50**	5.0
5	0.5	**55**	5.5
10	1.0	**60**	6.0
15	1.5	**65**	6.5
20	2.0	**70**	7.0
25	2.5	**75**	7.5
30	3.0	**80**	8.0
35	3.5	**85**	8.5
40	4.0	**90**	9.0
45	4.5	**95**	9.5
Continued at the right ...		**100**	10.0

Temperature table
MR: 0 ...+50 °C

°C	U_A in V
0	0.0
5	1.0
10	2.0
15	3.0
20	4.0
25	5.0
30	6.0
35	7.0
40	8.0
45	9.0
50	10.0

RHT-30
with display



HYGRASREG® RHT-30 Room hygrostats and humidity and temperature sensors (± 2.0 %)

Type / WG02	Setting Range Humidity	Temperature	Output	Steps	Display	Item No.
RHT-30						**External setting**
RHT-30W	5...95 % r. H.	+5...+45 °C	2 x Changeover contact, 1x 0-10 V	two-step		1202-4077-1011-200
RHT-30W DISPLAY	5...95 % r. H.	+5...+45 °C	2 x Changeover contact, 1x 0-10 V	two-step	■	1202-4077-1211-200
RHT-30-U						**Internal setting**
RHT-30W U	5...95 % r. H.	+5...+45 °C	2 x Changeover contact, 1x 0-10 V	two-step		1202-4077-1021-200

HYGRASREG® AH - 40

On-wall hygrostats and humidity sensors (± 2.0 %), electronic, one-step, with switching outputs

S+S REGELTECHNIK

Electronic hygrostat and humidity sensor **HYGR**ASREG® **AH - 40** with one switching output, adjustable switching threshold and display for displaying ACTUAL humidity (accuracy class ± 2.0 % r.H.) and for setting the target humidity.

It is suitable for controlling and monitoring the relative air humidity, e.g. in laboratories, production rooms, climatic exposure test cabinets, swimming pools, greenhouses etc., for controlling humidifying and dehumidifying facilities. The measuring transducers are designed for exact detection of humidity. The AH - 40 uses a digital, long-term stable sensor as a measuring element for measuring humidity. It is used in dust-free, unpolluted, non-aggressive air.

AH-40
with display and metal sinter filter (optional)



TECHNICAL DATA

Power supply:	24 V AC (± 20 %) 15...36 V DC
Power consumption:	< 1.1 VA / 24 V DC < 2.2 VA / 24 V AC
Sensors:	**digital humidity sensor,** small hysteresis, high long-term stability
Sensor protection:	**plastic** sinter filter, Ø 16 mm, L = 35 mm, exchangeable (optional **metal** sinter filter, Ø 16 mm, L = 32 mm)
Setting range:	5...95 % r. H.
Output:	potential-free changeover contact (24 V), 1 A ohmic load
Deviation, humidity:	typically **± 2.0** % (20...80 % r. H.) at +25 °C, otherwise ± 3.0 %
Ambient temperature:	storage –35...+85 °C; operation – 30...+75 °C, non-precipitating
Long-term stability:	± 1 % per year
Enclosure:	plastic, UV-stabilised, material polyamide, 30 % glass-globe reinforced, with quick-locking screws (slotted / Phillips head combination), colour traffic white (similar to RAL 9016), enclosure cover for display is transparent!
Enclosure dimensions:	72 x 64 x 43.3 mm (Tyr 1 with display)
Electrical connection:	0.14 - 1.5 mm², via terminal screws
Cable gland:	M 16 x 1.5, including strain relief, exchangeable, max. inner diameter 10.4 mm
Protective tube:	**stainless steel V2A** (1.4301), Ø 16 mm, NL = 55 mm
Prozessanschluss:	by screws
Protection class:	III (according to EN 60 730)
Protection type:	IP 65 (according to EN 60 529) enclosure only!
Standards:	CE conformity, electromagnetic compatibility according to EN 61 326, EMC dire ctive 2014 / 30 / EU
Display:	**two-line display with illumination,** cutout approx. 36 x 15 mm (W x H), for displaying actual humidit and for setting the target humidity
Displaying:	The 1st line of the display shows the **relative humidity.** The 2nd line shows on the left side the information regarding the **switching status of the relay** (as a circuit), as well as the **switching value** readout in % r.H. on the right side (adjustable using the set potentiometer). ○ **Circuit, empty** = relay in idle state ● **Circuit, full** = relay energised
FUNCTION	The relay output is triggered (contact 13 -11 closed) if the humidity switchpoint is not reached and opens (contact 12 -11 closed) in the event of a fault (power failure, condensation) LED short pulses = relay active → switchpoint not reached LED long pulses = relay inactive → switchpoint exceeded

Display standard **AH-40**



Dimensional drawing **AH-40**

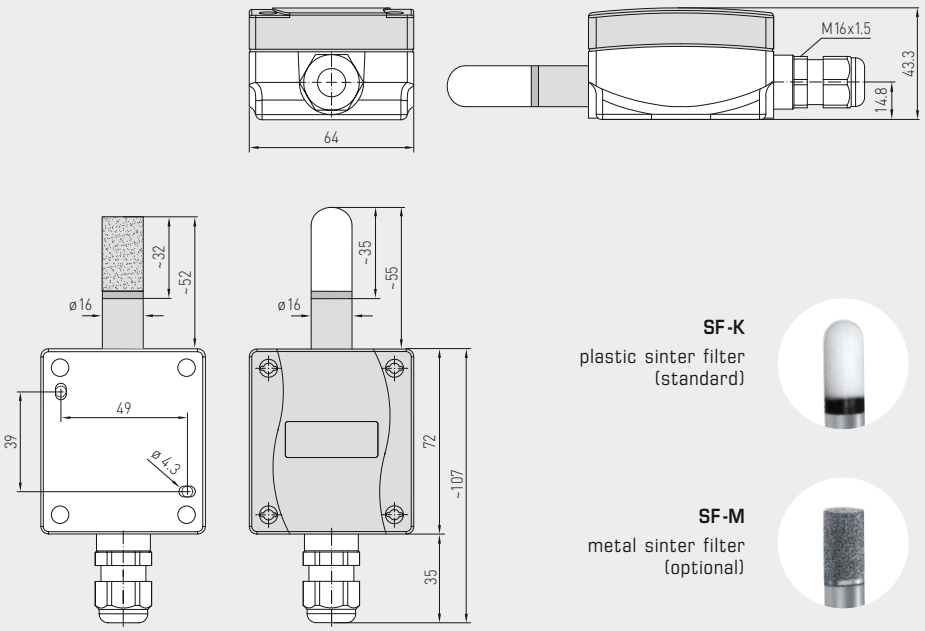

with **metal** sinter filter (optional)

with **plastic** sinter filter (standard)

SF-K
plastic sinter filter (standard)

SF-M
metal sinter filter (optional)

AH-40
with display and plastic sinter filter (standard)



Schematic diagram **AH-40**

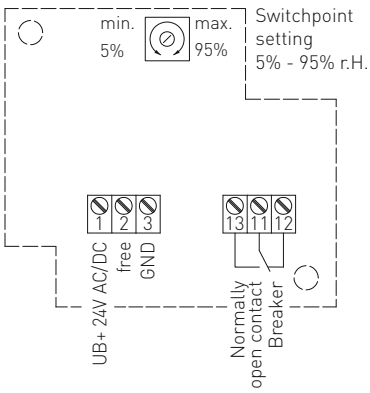

Connecting diagram **AH-40**

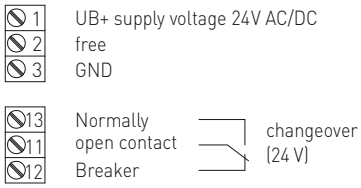



HYGRASREG® AH-40	On-wall hygrostats and humidity sensors (± 2.0 %), *Premium*				
Type / WG01	**Setting Range** Humidity	**Output**	**Steps**	**Display**	**Item No.**
AH-40-U					
AH-40W TYR-1 DISPLAY	5...95 % r. H.	1 x Changeover contact	one-step	■	1202-1065-0221-000

Accessories		
SF-M	**Metal** sinter filter, Ø 16 mm, L = 32 mm, exchangeable stainless steel **V4A** (1.4404)	7000-0050-2200-100

HYGRASREG® AHT - 30

On-wall hygrostats and humidity and temperature sensors (± 2.0 %), electronic, two-step, with multi-range switching and continuous / switching output

S+S REGELTECHNIK

Electronic on-wall hygrostat and/or on-wall thermostat **HYGR**ASREG® **AHT-30** with a continuous and two switching outputs, adjustable switching thresholds and display for indicating ACTUAL humidity and/or ACTUAL temperature (accuracy class ± 2.0 % r.H.). The setpoints can be allocated to the relative humidity and/or to the temperature.

It is suitable for regulating and monitoring relative humidity (humidifying and dehumidifying) and/or the temperature (heating and cooling), e.g. in laboratories, production facilities, climatic test cabinets, indoor swimming pools, greenhouses, etc., to control humidifying and dehumidifying equipment or heating system control. The measuring transducers are designed for exact humidity/temperature measurement. The AHT-30 uses a digital, long-term stable sensor as a measuring element. It is used in dust-free, unpolluted, non-aggressive air.

TECHNICAL DATA

Power supply:	24 V AC / DC (± 20 %)
Power consumption:	< 1,5 VA / 24 V DC, < 3,5 VA / 24 V AC
Sensor:	**digital humidity sensor with integrated temperature sensor,** low hysteresis, high long-term stability
Sensor protection:	**plastic** sinter filter, Ø 16 mm, L = 35 mm, exchangeable (optional **metal** sinter filter, Ø 16 mm, L = 32 mm)
Setting range:	5...95 % r.H. (humidity) **Multi-range switching with 4 switchable measuring ranges** (see table) –35...+35 °C; –35...+75 °C; 0...+50 °C; 0...+80 °C (temperature) (Switch steps 1 and 2 are separately adjustable)
Operating difference:	**Mode 1:** both switch steps are freely adjustable (rel. humidity) **Mode 2:** 5 % between both switch steps (rel. humidity) **Mode 3:** both switch steps freely adjustable (temperature) **Mode 4:** switch step 1 (temperature), switch step 2 (rel. humidity) (adjustable via DiP switches)
Output:	potential-free changeover contacts (2 x changeover contact 24 V, 1A ohmic load, separately adjustable, 2x 0 - 10 V for U variant or 4...20 mA for I variant)
Deviation, humidity:	typically **± 2.0** % (20...80 % r. H.) at +25 °C, otherwise ± 3.0 %
Deviation, temperature:	typically ± 0.4 K at +25 °C
Ambient temperature:	storage –35...+85 °C; operation – 30...+75 °C, non-precipitating
Long-term stability:	± 1 % per year
Enclosure:	plastic, UV-stabilised, material polyamide, 30 % glass-globe reinforced, with quick-locking screws (slotted / Phillips head combination), colour traffic white (similar to RAL 9016), enclosure cover for display is transparent!
Enclosure dimensions:	126 x 90 x 50 mm (Tyr 2)
Cable gland:	M 16 x 1.5; including strain relief, exchangeable, max. inner diameter 10.4 mm
Protective tube:	**stainless steel V2A** (1.4301), Ø 16 mm, NL = 55 mm (see dimensional drawing)
Protection class:	III (according to EN 60 730)
Protection type:	IP 65 (according to EN 60 529) enclosure only!
Electrical connection:	0.14 - 1.5 mm², via terminal screws
Standards:	CE conformity, EMC directive 2014 / 30 / EU
Display:	three-line **display with illuminatio**n, cutout approx. 70 x 40 mm (W x H), for displaying ACTUAL humidity and/or ACTUAL temperature or for setpoint adjustment
FUNCTION	
Humidifying/heating:	**1st step:** wire contacts 11 - 12. If actual humidity falls more than 3 % r.H. / 1 K (hysteresis) below switching threshold S1, the changeover contact switches to 11 - 12. **2nd step:** wire contacts 21 - 22. If actual humidity falls more than 3 % r.H. / 1 K (hysteresis) below switching threshold S2, the changeover contact switches to 21 - 22. Terminal 2: output relative humidity / terminal 3: output temperature
Dehumidifying/cooling:	**1st step:** wire contacts 11 - 13. When actual humidity exceeds switching threshold S1, the changeover contact switches to 11 - 13. **2nd step:** wire contacts 21 - 23. When actual humidity exceeds switching threshold S 2, the changeover contact switches to 21 - 23. Terminal 2: output relative humidity / terminal 3: output temperature

Dimensional drawing **AHT-30**

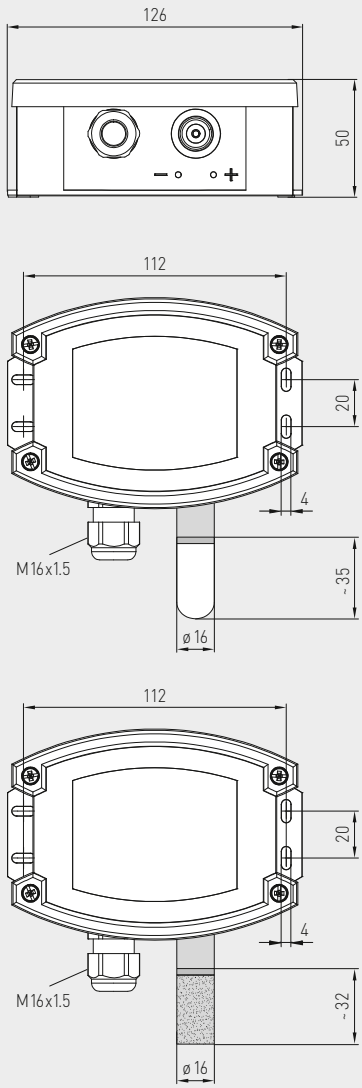

SF-K
plastic sinter filter
(standard)



SF-M
metal sinter filter
(optional)



AHT-30
with display and
plastic sinter filter
(standard)



AHT-30
with display and
metal sinter filter
(optional)



WS-03
Weather and sun protection hood
(optional)



Display readout

The **1st line** of the display shows the **ACTUAL humidity** in % r.H. and the **ACTUAL temperature** in °C. The displays showing the ACTUAL values alternate in a 3-second rhythm. The resolution is 1/10 % r.H. or 1/10 °C.

The **3rd line** shows information about the **switching status of relay 1 and 2** (as circuits) on the left, and on the right for the **switching values of relay 1 and 2** in % r.H. or °C (adjustable via the corresponding set potentiometer). The reference to respective measured value (relative humidity or temperature) is determined by the mode selected.

For improved legibility, backlighting is provided.

HYGRASREG® AHT - 30

On-wall hygrostats and humidity and temperature sensors (± 2.0 %), electronic, two-step, with multi-range switching and continuous / switching output

S+S REGELTECHNIK

Schematic diagram **AHT-30**

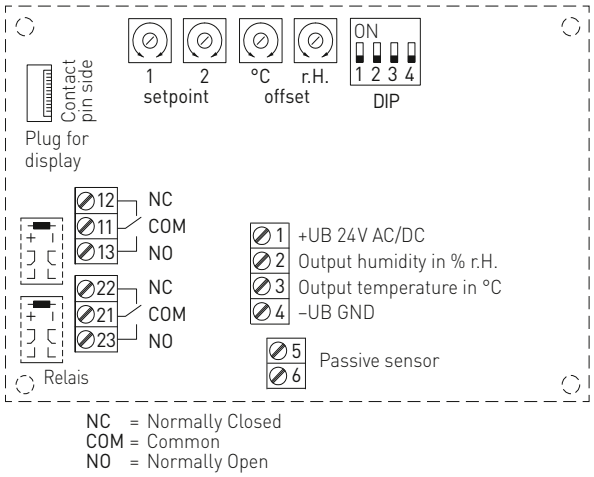

NC = Normally Closed
COM = Common
NO = Normally Open

DIP switches **AHT-30**

Function mode	DIP 1	DIP 2
Mode 1 (**2x** 5...95 % r.H.) (default)	OFF	OFF
Mode 2 (5...95 % r.H. **+ 5** % r.H.)	**ON**	OFF
Mode 3 (**2x** –35...+80 °C)	OFF	**ON**
Mode 4 (5...95 % r.H. / –35...+80 °C)	**ON**	**ON**
Temperature range	**DIP 3**	**DIP 4**
–35...+35 °C	OFF	OFF
0...+80 °C	**ON**	OFF
0...+50 °C (default)	OFF	**ON**
–35...+75 °C	**ON**	**ON**

Connecting diagram **AHT-30-I**

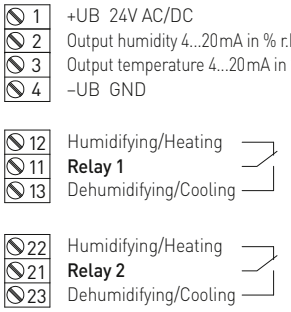

Potential-free changeover contact 24V

Connecting diagram **AHT-30-U**

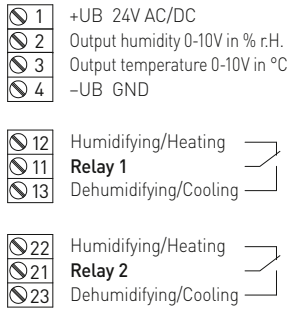

Potential-free changeover contact 24V

Supply	AC	DC
→ **1**	24 V~	24 V DC
→ **4**	0 V	GND

12	(A1) →	**Relay 1** Breaker contact
11	(W1) →	**Relay 1** Changeover contact
13	(B1) →	**Relay 1** Normally open contact

22	(A2) →	**Relay 2** Breaker contact
21	(W2) →	**Relay 2** Changeover contact
23	(B2) →	**Relay 2** Normally open contact

Switching output **AHT-30**

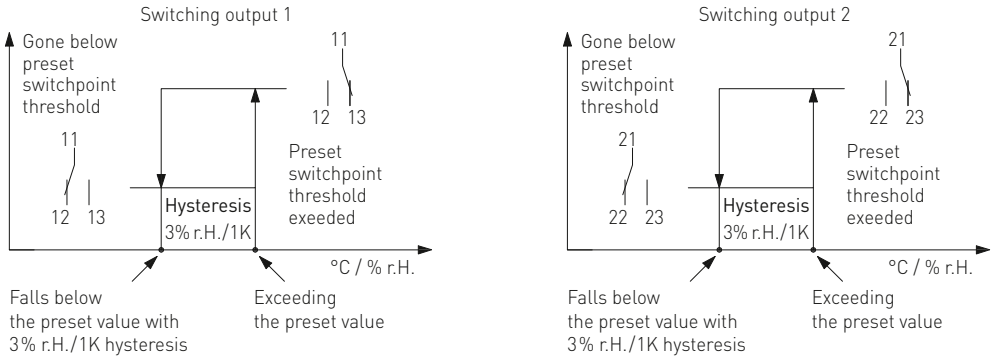

Mode 1: Independent switchpoints for both relay outputs can be defined in the range of 5...95 % r.H. by the control knobs (setpoint 1 for relay 1, setpoint 2 for relay 2, see schematic diagram). When the respective switchpoint is exceeded, the corresponding relay switches over (changeover contact 1 switches from position 2 to position 3). When the pre-set switchpoint is undershot again by more than 3 % r.H. (hysteresis), the respective switching output switches back to the initial position (changeover contact 1 switches from position 3 to position 2).

Mode 2: In Mode 2, only control knob setpoint 1 is active (setpoint 2 without function)! The switchpoint for the first relay is defined in the range of 5...95 % r.H. by the control knob setpoint 1 (see schematic diagram). The switchpoint for the second relay output is invariably defined in mode 2 as "Switchpoint 1 + 5 % r.H.". Hysteresis of 3 % r.H. is also predefined for each switching output in mode 2.

Mode 3: Independent switchpoints within the temperature range (selectable via DIP switches) for both relay outputs can be defined by the control knobs (setpoint 1 for relay 1, setpoint 2 for relay 2). If the respective switchpoint is exceeded, the corresponding relay switches over. If the pre-set threshold value is undershot again by 1 K (hysteresis), the respective switching output switches back to the initial position. The thresholds of the setting range (temperature) are 5 °C above the minimum or below the maximum range value respectively.

Mode 4: In mode 4, the control knob is allocated to setpoint 1 of the temperature, while control knob is allocated to setpoint 2 of the relative humidity. The switchpoints can be set within the temperature range (selectable via DIP switches) or from 5...95 % r.H. (humidity). The thresholds of the setting range (temperature) are 5 °C above the minimum or below the maximum range value respectively.

AHT-30
with display



Temperature table
MR: –35...+75 °C

°C	U_A in V	I_A in mA
–35	0.0	4.0
–30	0.5	4.7
–25	0.9	5.5
–20	1.4	6.2
–15	1.8	6.9
–10	2.3	7.6
–5	2.7	8.4
0	3.2	9.1
5	3.6	9.8
10	4.1	10.5
15	4.5	11.3
20	5.0	12.0
25	5.5	12.7
30	5.9	13.5
35	6.4	14.2
40	6.8	14.9
45	7.3	15.6
50	7.7	16.4
55	8.2	17.1
60	8.6	17.8
65	9.1	18.5
70	9.5	19.2
75	10.0	20.0

Temperature table
MR: –35...+35 °C

°C	U_A in V	I_A in mA
–35	0.0	4.0
–30	0.7	5.1
–25	1.4	6.3
–20	2.1	7.4
–15	2.9	8.6
–10	3.6	9.7
–5	4.3	10.9
0	5.0	12.0
5	5.7	13.1
10	6.4	14.3
15	7.1	15.4
20	7.9	16.6
25	8.6	17.7
30	9.3	18.9
35	10.0	20.0

Temperature table
MR: 0...+50 °C

°C	U_A in V	I_A in mA
0	0.0	4.0
5	1.0	5.6
10	2.0	7.2
15	3.0	8.8
20	4.0	10.4
25	5.0	12.0
30	6.0	13.6
35	7.0	15.2
40	8.0	16.8
45	9.0	18.4
50	10.0	20.0

Temperature table
MR: 0...+80 °C

°C	U_A in V	I_A in mA
0	0.0	4.0
5	0.6	5.0
10	1.3	6.0
15	1.9	7.0
20	2.5	8.0
25	3.1	9.0
30	3.8	10.0
35	4.4	11.0
40	5.0	12.0
45	5.6	13.0
50	6.3	14.0
55	6.9	15.0
60	7.5	16.0
65	8.1	17.0
70	8.8	18.0
75	9.4	19.0
80	10.0	20.0

Humidity table
MR: 0...100 % r.H.

% r.H.	U_A in V	I_A in mA
0	0.0	4.0
5	0.5	4.8
10	1.0	5.6
15	1.5	6.4
20	2.0	7.2
25	2.5	8.0
30	3.0	8.8
35	3.5	9.6
40	4.0	10.4
45	4.5	11.2
50	5.0	12.0
55	5.5	12.8
60	6.0	13.6
65	6.5	14.4
70	7.0	15.2
75	7.5	16.0
80	8.0	16.8
85	8.5	17.6
90	9.0	18.4
95	9.5	19.2
100	10.0	20.0

HYGRASREG® AHT-30 On-wall hygrostat and humidity and temperature sensor (±2.0%), *Deluxe*

Type / WG02	Setting Range Humidity	Temperature	Output	Steps	Display	Item No.
AHT-30-I						**I-variant**
AHT-30W-I TYR2	5...95 % r.H.	–35...+75 °C –35...+35 °C 0...+50 °C 0...+80 °C	2 x changeover contact, 2x 4...20 mA	two-step	■	1202-7127-2421-000
AHT-30-U						**U-variant**
AHT-30W-U TYR2	5...95 % r.H.	–35...+75 °C –35...+35 °C 0...+50 °C 0...+80 °C	2 x changeover contact, 2x 0-10 V	two-step	■	1202-7127-1421-000
Accessories						
SF-M	**Metal** sinter filter, Ø 16 mm, L = 32 mm, exchangeable stainless steel **V4A** (1.4404)					7000-0050-2200-100
WS-03	**Weather and sun protection hood**, 200 x 180 x 150 mm, stainless steel **V2A** (1.4301)					7100-0040-6000-000

HYGRASREG® KH - 10

Duct hygrostats including mounting flange, mechanical, one-step, with switching output

S+S REGELTECHNIK

Mechanical duct hygrostat **HYGR**ASREG® **KH-10** with switching output as one-step hygrostat. It works without external voltage and is used for controlling and monitoring the relative humidity in ventilation and air conditioning ducts, laboratories, production facilities, climatic test cabinets, indoor swimming pools, greenhouses, etc. to control humidifying and dehumidifying equipment, as minimum guard, or maximum hygrostat. KH-10 is applied in dust-free, pollutant-free, non-aggressive air.

KH-10-U
(with internal setting)



TECHNICAL DATA

Switching capacity: (Contact load)	15 (2) A; 24...250 V AC, min. 100 mA > 24 V in dry rooms only according to VDE 0110
Setting range:	35...100 % r. H.
Contact:	dust-proof microswitch as single-pole, potential-free changeover contact (gold-plated optional)
Enclosure:	plastic, UV-stabilised, material polyamide, 30 % glass-globe reinforced, colour traffic white (similar to RAL 9016)
Enclosure dimensions:	108 x 70 x 73.5 mm (Thor 2)
Cable gland:	M 20 x 1.5 ; including strain relief
Ambient temperature:	0...+ 60 °C
Operating difference:	approx. 3...6 % r. H.
Measuring accuracy:	typically ± 4 % r. H.
Controlled medium:	air, unpressurised, non-aggressive
Average temperature coefficient:	0.2 % / K; at +20 °C and 50 % r. H.
Flow rate:	max. 8 m / s
Sensor sleeve:	made of brass nickel-plated, Ø 20 mm, NL = 223 mm
Electrical connection:	0.14 - 1.5 mm², via terminal screws
Protection class:	I (according to EN 60 730)
Protection type:	IP 65 (according to EN 60 529)
Standards:	CE conformity, EMC directive 2014 / 30 / EU, low-voltage directive 2014 / 35 / EU
ACCESSORIES	see last chapter
FUNCTION	
Humidifying:	Wire contacts 1 - 4. Switch points ON /OFF are approx. 2.5 % r. H. above or below the selected value.
Dehumidifying:	Wire contacts 1 - 2. Switch points ON /OFF are approx. 2.5 % r. H. above or below the selected value.

Schematic diagram **KH-10**

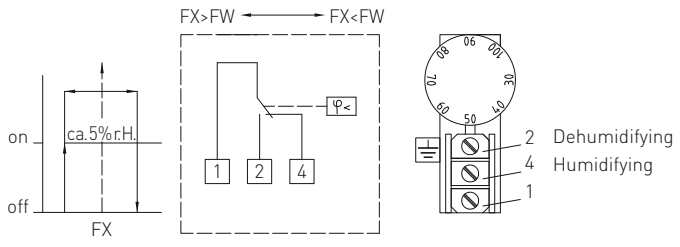

FX = measured relative humidity
FW = Humidity rate preset at the turning knob

Dimensional drawing **KH-10**

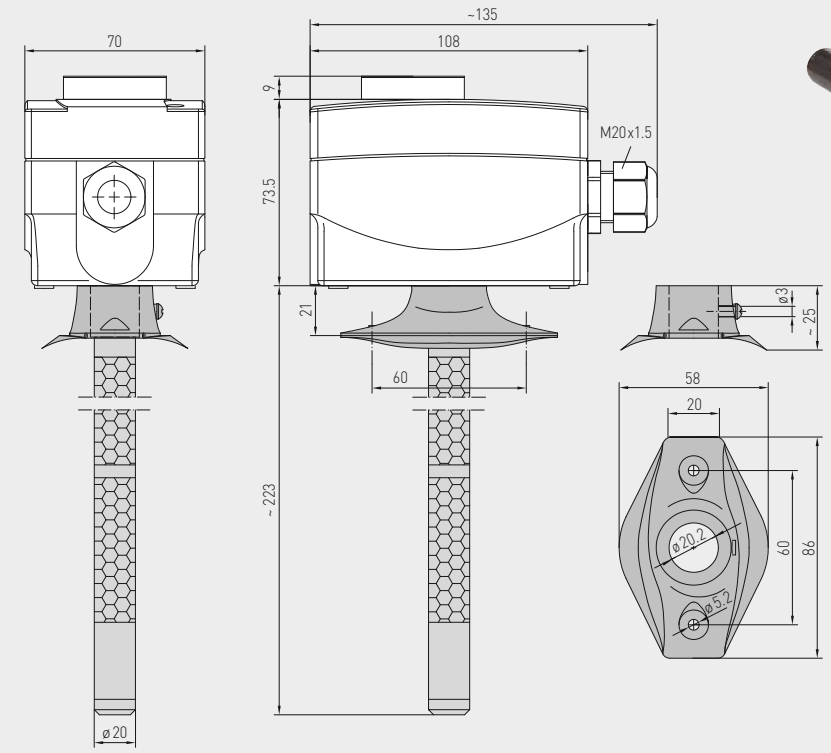

KH-10
(with external setting)



MF-20-K
Mounting flange, plastic



HYGRASREG® KH - 10 Duct hygrostats, mechanical, *Standard*				
Type / WG01	**Setting Range** Humidity	**Steps**	**Features**	**Item No.**
KH-10				**External setting**
KH-10	35...100 % r. H.	one-step	–	1202-3012-0010-000
KH-10-U				**Internal setting**
KH-10 U	35...100 % r. H.	one-step	Setpoint setter concealed	1202-3012-0020-000
Accessories				
MF-20-K	**Mounting flange** for KH, plastic, for duct installation (included in the scope of delivery)			7100-0030-4000-000
WH-20	**Wall bracket** for KH for on-wall mounting			1200-0010-4000-000
	For further information see last chapter!			

HYGRASREG® KH-40

Duct hygrostats and humidity sensors (± 2.0 %), including mounting flange, electronic, one-step, with switching outputs

S+S REGELTECHNIK

Electronic hygrostat and humidity sensor **HYGR**ASREG® **KH-40** with one switching output, adjustable switching threshold and display for displaying ACTUAL humidity (accuracy class ± 2.0 % r.H.) and for setting the target humidity. It is suitable for controlling and monitoring the relative air humidity, e.g.

in ventilation and air conditioning ducts, laboratories, production rooms, climatic exposure test cabinets, swimming pools, greenhouses etc., for controlling humidifying and dehumidifying facilities. The measuring transducers are designed for exact detection of humidity. The KH-40 uses a digital, long-term stable sensor as a measuring element for measuring humidity. It is used in dust-free, unpolluted, non-aggressive air.

TECHNICAL DATA

Power supply:	24 V AC (± 20 %) 15...36 V DC
Power consumption:	< 1.1 VA / 24 V DC < 2.2 VA / 24 V AC
Sensors:	**digital humidity sensor,** small hysteresis, high long-term stability
Sensor protection:	**plastic** sinter filter, Ø 16 mm, L = 35 mm, exchangeable (optional **metal** sinter filter, Ø 16 mm, L = 32 mm)
Setting range:	5...95 % r. H.
Output:	potential-free changeover contact (24 V), 1 A ohmic load
Deviation, humidity:	typically **± 2.0** % (20...80 % r. H.) at +25 °C, otherwise ± 3.0 %
Ambient temperature:	storage –35...+85 °C; operation – 30...+75 °C, non-precipitating
Long-term stability:	± 1 % per year
Enclosure:	plastic, UV-stabilised, material polyamide, 30 % glass-globe reinforced, with quick-locking screws (slotted / Phillips head combination), colour traffic white (similar to RAL 9016), enclosure cover for display is transparent!
Enclosure dimensions:	72 x 64 x 43.3 mm (Tyr 1 with display)
Electrical connection:	0.14 - 1.5 mm², via terminal screws
Cable gland:	M 16 x 1.5, including strain relief, exchangeable, max. inner diameter 10.4 mm
Protective tube:	**PLEUROFORM**™, material polyamide (PA6), with torsion protection, Ø 20 mm, NL = 235 mm, v_{max} = 30 m/s (air) (on request, optional **stainless steel V2A** (1.4301), Ø 16 mm)
Process connection:	by mounting flange, plastic (included in the scope of delivery)
Protection class:	III (according to EN 60 730)
Protection type:	IP 65 (according to EN 60 529) enclosure only!
Standards:	CE conformity, electromagnetic compatibility according to EN 61 326, EMC directive 2014 / 30 / EU
Display:	two-line **display with illumination,** cutout approx. 36 x 15 mm (W x H), for displaying actual humidit and for setting the target humidity
Displaying:	The 1st line of the display shows the **relative humidity.** The 2nd line shows on the left side the information regarding the **switching status of the relay** (as a circuit), as well as the **switching value** readout in % r.H. on the right side (adjustable using the set potentiometer). ○ **Circuit, empty** = relay in idle state ● **Circuit, full** = relay energised
FUNCTION	The relay output is triggered (contact 13-11 closed) if the humidity switchpoint is not reached and opens (contact 12-11 closed) in the event of a fault (power failure, condensation) LED short pulses = relay active → switchpoint not reached LED long pulses = relay inactive → switchpoint exceeded

SF-K
plastic sinter filter (standard)



SF-M
metal sinter filter (optional)



MFT-20-K
Mounting flange, plastic



Dimensional drawing **MFT-20-K**

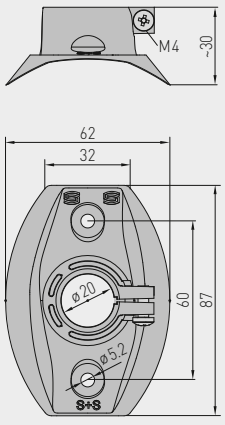

Display standard **KH-40**



Duct hygrostats and humidity sensors (± 2.0 %), including mounting flange, electronic, one-step, with switching outputs

Dimensional drawing **KH-40**

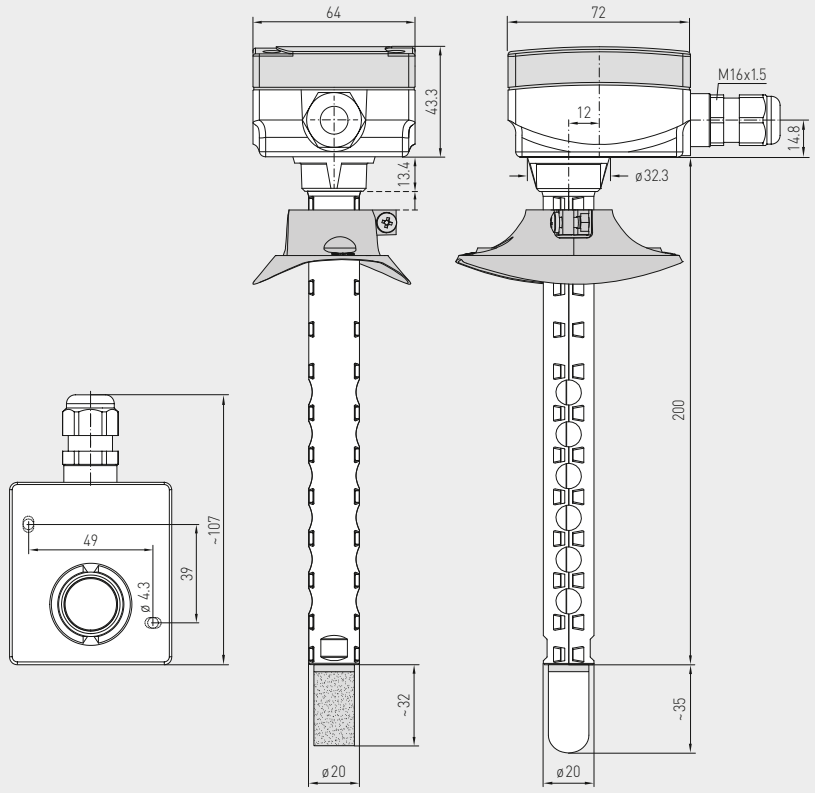

with **metal** sinter filter (optional)

with **plastic** sinter filter (standard)

KH-40
with display and plastic sinter filter (standard)







Schematic diagram **KH-40**

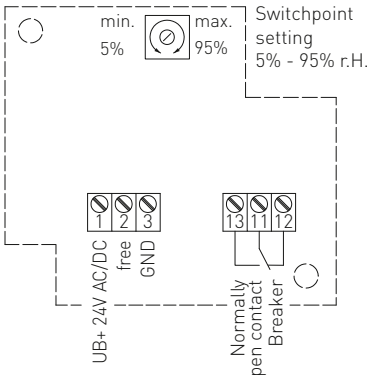

Connecting diagram **KH-40**

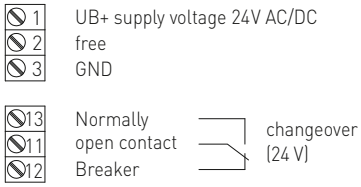

HYGRASREG® KH-40	Duct hygrostats and humidity sensors (± 2.0 %), *Premium*				
Type / WG01	**Setting Range** Humidity	**Output**	**Steps**	**Display**	**Item No.**
KH-40-U					
KH-40W TYR-1 DISPLAY	5...95 % r. H.	1 x Changeover contact	one-step	■	1202-3065-0221-000

Accessories		
SF-M	**Metal** sinter filter, Ø 16 mm, L = 32 mm, exchangeable stainless steel **V4A** (1.4404)	7000-0050-2200-100

HYGRASREG® KHT - 30

Duct hygrostats and humidity and temperature sensors (± 2.0 %), incl. mounting flange, electronic, two-step, with multi-range switching and continuous / switching output

S+S REGELTECHNIK

Electronic duct hygrostat and/or duct thermostat **HYGR**ASREG® **KHT-30** with a continuous and two switching outputs, adjustable switching thresholds and display for indicating ACTUAL humidity and/or ACTUAL temperature (accuracy class ± 2.0 % r.H.). The setpoints can be allocated to the relative humidity and/or to the temperature.

It is suitable for regulating and monitoring relative humidity (humidifying and dehumidifying) and/or the temperature (heating and cooling), e.g. in ventilation and air conditioning ducts, laboratories, production facilities, climatic test cabinets, indoor swimming pools, greenhouses, etc., to control humidifying and dehumidifying equipment or heating system control. The measuring transducers are designed for exact humidity/temperature measurement. The KHT-30 uses a digital, long-term stable sensor as a measuring element. It is used in dust-free, unpolluted, non-aggressive air.

TECHNICAL DATA

Power supply:	24 V AC / DC (± 20 %)
Power consumption:	< 1,5 VA / 24 V DC, < 3,5 VA / 24 V AC
Sensor:	**digital humidity sensor with integrated temperature sensor,** low hysteresis, high long-term stability
Sensor protection:	**plastic** sinter filter, Ø 16 mm, L = 35 mm, exchangeable (optional **metal** sinter filter, Ø 16 mm, L = 32 mm)
Setting range:	5...95 % r.H. (humidity) **Multi-range switching with 4 switchable measuring ranges** (see table) –35...+35 °C; –35...+75 °C; 0...+50 °C; 0...+80 °C (temperature) (Switch steps 1 and 2 are separately adjustable)
Operating difference:	**Mode 1:** both switch steps are freely adjustable (rel. humidity) **Mode 2:** 5 % between both switch steps (rel. humidity) **Mode 3:** both switch steps freely adjustable (temperature) **Mode 4:** switch step 1 (temperature), switch step 2 (rel. humidity) (adjustable via DiP switches)
Output:	potential-free changeover contacts (2 x changeover contact 24 V, 1A ohmic load, separately adjustable, 2x 0 - 10V for U variant or 4...20mA for I variant)
Deviation, humidity:	typically **± 2.0** % (20...80 % r. H.) at +25 °C, otherwise ± 3.0 %
Deviation, temperature:	typically **± 0.2 K** at +25 °C
Ambient temperature:	storage –35...+85 °C; operation – 30...+75 °C, non-precipitating
Long-term stability:	± 1 % per year
Enclosure:	plastic, UV-stabilised, material polyamide, 30 % glass-globe reinforced, with quick-locking screws (slotted / Phillips head combination), colour traffic white (similar to RAL 9016), enclosure cover for display is transparent!
Enclosure dimensions:	126 x 90 x 50 mm (Tyr 2)
Cable gland:	M 16 x 1.5; including strain relief, exchangeable, max. inner diameter 10.4 mm
Protective tube:	**PLEUROFORM**™, material polyamide (PA6), with torsion protection, Ø 20 mm, NL = 235 mm, v_{max} = 30 m/s (air) (optional available on request **stainless steel V2A** (1.4301), Ø 16 mm)
Protection class:	III (according to EN 60 730)
Protection type:	IP 65 (according to EN 60 529) enclosure only!
Electrical connection:	0.14 - 1.5 mm², via terminal screws
Standards:	CE conformity, EMC directive 2014 / 30 / EU
Display:	three-line **display with illuminatio**n, cutout approx. 70 x 40 mm (W x H), for displaying ACTUAL humidity and/or ACTUAL temperature or for setpoint adjustment
FUNCTION	
Humidifying/heating:	**1st step:** wire contacts 11 - 12. If actual humidity falls more than 3 % r.H. / 1 K (hysteresis) below switching threshold S1, the changeover contact switches to 11 - 12. **2nd step:** wire contacts 21 - 22. If actual humidity falls more than 3 % r.H. / 1 K (hysteresis) below switching threshold S2, the changeover contact switches to 21 - 22. Terminal 2: output relative humidity / terminal 3: output temperature
Dehumidifying/cooling:	**1st step:** wire contacts 11 - 13. When actual humidity exceeds switching threshold S1, the changeover contact switches to 11 - 13. **2nd step:** wire contacts 21 - 23. When actual humidity exceeds switching threshold S 2, the changeover contact switches to 21 - 23. Terminal 2: output relative humidity / terminal 3: output temperature

Duct hygrostats and humidity and temperature sensors (± 2.0 %), incl. mounting flange, electronic, two-step, with multi-range switching and continuous/switching output

Dimensional drawing **KHT-30**

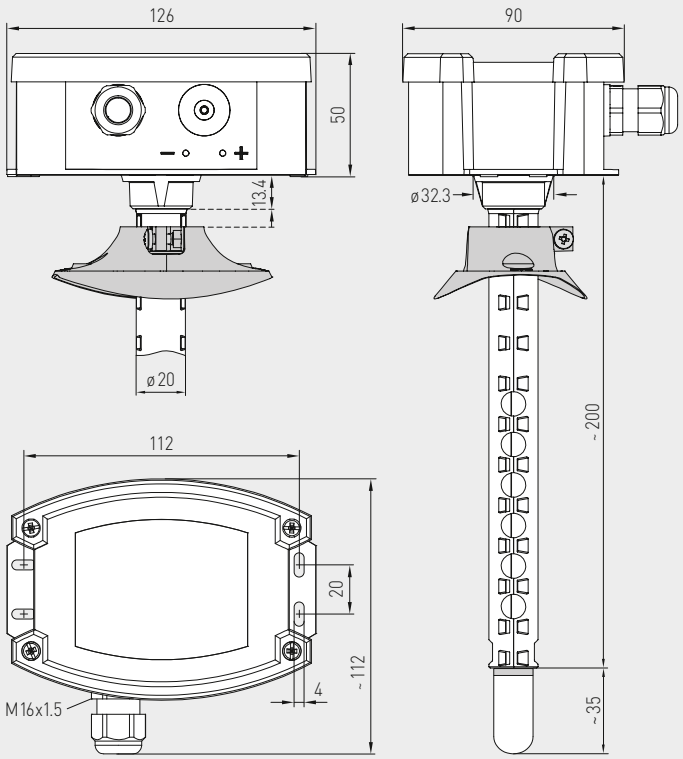

KHT-30
with display and plastic sinter filter (standard)



KHT-30
with display and metal sinter filter (optional)



Dimensional drawing **MFT-20-K**

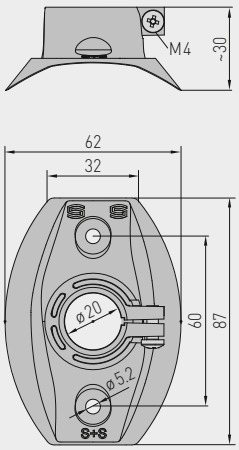

SF-K
plastic sinter filter (standard)



SF-M
metal sinter filter (optional)



MFT-20-K
Mounting flange, plastic



Display readout

The **1st line** of the display shows the **ACTUAL humidity** in % r.H. and the **ACTUAL temperature** in °C.
The displays showing the ACTUAL values alternate in a 3-second rhythm.
The resolution is 1/10 % r.H. or 1/10 °C.

The **3rd line** shows information about the **switching status of relay 1 and 2** (as circuits) on the left, and on the right for the **switching values of relay 1 and 2** in % r.H. or °C (adjustable via the corresponding set potentiometer). The reference to respective measured value (relative humidity or temperature) is determined by the mode selected.

For improved legibility, backlighting is provided.

HYGRASREG® KHT-30

Duct hygrostats and humidity and temperature sensors (± 2.0 %), incl. mounting flange, electronic, two-step, with multi-range switching and continuous/switching output

S+S REGELTECHNIK

Schematic diagram **KHT-30**

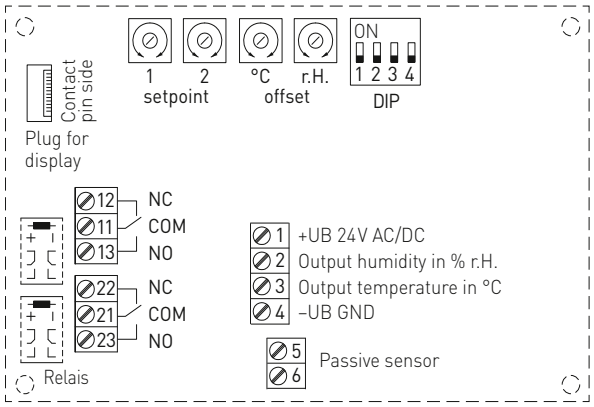

NC = Normally Closed
COM = Common
NO = Normally Open

DIP switches **KHT-30**

Function mode	DIP 1	DIP 2
Mode 1 (**2x** 5...95 % r.H.) (default)	OFF	OFF
Mode 2 (5...95 % r.H. **+ 5** % r.H.)	**ON**	OFF
Mode 3 (**2x** –35...+80 °C)	OFF	**ON**
Mode 4 (5...95 % r.H. / –35...+80 °C)	**ON**	**ON**
Temperature range	**DIP 3**	**DIP 4**
–35...+35 °C	OFF	OFF
0...+80 °C	**ON**	OFF
0...+50 °C (default)	OFF	**ON**
–35...+75 °C	**ON**	**ON**

Connecting diagram **KHT-30-I**

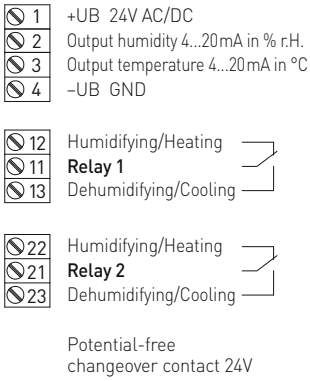

Potential-free changeover contact 24V

Connecting diagram **KHT-30-U**

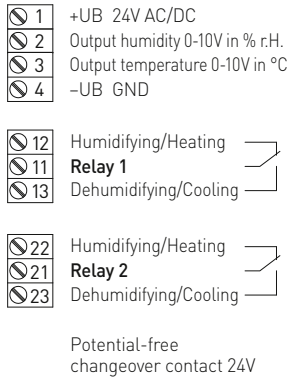

Potential-free changeover contact 24V

Supply	AC	DC
→ **1**	24 V~	24 V DC
→ **4**	0 V	GND

12	(A1) →	**Relay 1** Breaker contact
11	(W1) →	**Relay 1** Changeover contact
13	(B1) →	**Relay 1** Normally open contact

22	(A2) →	**Relay 2** Breaker contact
21	(W2) →	**Relay 2** Changeover contact
23	(B2) →	**Relay 2** Normally open contact

Switching output **KHT-30**

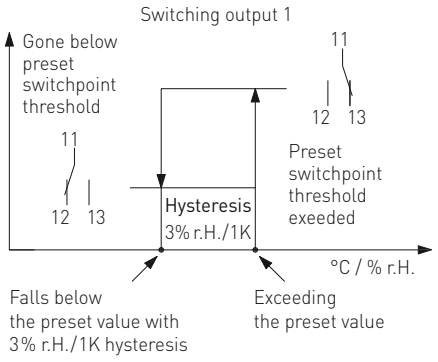

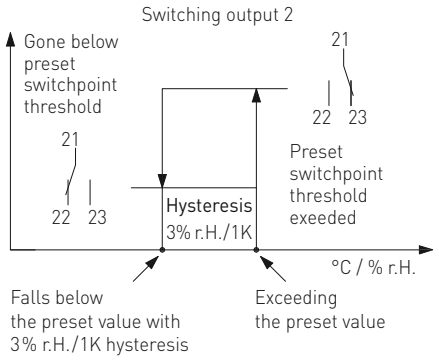

Mode 1: Independent switchpoints for both relay outputs can be defined in the range of 5...95 % r.H. by the control knobs (setpoint 1 for relay 1, setpoint 2 for relay 2, see schematic diagram). When the respective switchpoint is exceeded, the corresponding relay switches over (changeover contact 1 switches from position 2 to position 3). When the pre-set switchpoint is undershot again by more than 3 % r.H. (hysteresis), the respective switching output switches back to the initial position (changeover contact 1 switches from position 3 to position 2).

Mode 2: In Mode 2, only control knob setpoint 1 is active (setpoint 2 without function)! The switchpoint for the first relay is defined in the range of 5...95 % r.H. by the control knob setpoint 1 (see schematic diagram). The switchpoint for the second relay output is invariably defined in mode 2 as "Switchpoint 1 + 5 % r.H.". Hysteresis of 3 % r.H. is also predefined for each switching output in mode 2.

Mode 3: Independent switchpoints within the temperature range (selectable via DIP switches) for both relay outputs can be defined by the control knobs (setpoint 1 for relay 1, setpoint 2 for relay 2). If the respective switchpoint is exceeded, the corresponding relay switches over. If the pre-set threshold value is undershot again by 1 K (hysteresis), the respective switching output switches back to the initial position. The thresholds of the setting range (temperature) are 5 °C above the minimum or below the maximum range value respectively.

Mode 4: In mode 4, the control knob is allocated to setpoint 1 of the temperature, while control knob is allocated to setpoint 2 of the relative humidity. The switchpoints can be set within the temperature range (selectable via DIP switches) or from 5...95 % r.H. (humidity). The thresholds of the setting range (temperature) are 5 °C above the minimum or below the maximum range value respectively.







KHT-30
with display

Temperature table
MR: –35...+75 °C

°C	U_A in V	I_A in mA
–35	0.0	4.0
–30	0.5	4.7
–25	0.9	5.5
–20	1.4	6.2
–15	1.8	6.9
–10	2.3	7.6
–5	2.7	8.4
0	3.2	9.1
5	3.6	9.8
10	4.1	10.5
15	4.5	11.3
20	5.0	12.0
25	5.5	12.7
30	5.9	13.5
35	6.4	14.2
40	6.8	14.9
45	7.3	15.6
50	7.7	16.4
55	8.2	17.1
60	8.6	17.8
65	9.1	18.5
70	9.5	19.2
75	10.0	20.0

Temperature table
MR: –35...+35 °C

°C	U_A in V	I_A in mA
–35	0.0	4.0
–30	0.7	5.1
–25	1.4	6.3
–20	2.1	7.4
–15	2.9	8.6
–10	3.6	9.7
–5	4.3	10.9
0	5.0	12.0
5	5.7	13.1
10	6.4	14.3
15	7.1	15.4
20	7.9	16.6
25	8.6	17.7
30	9.3	18.9
35	10.0	20.0

Temperature table
MR: 0...+50 °C

°C	U_A in V	I_A in mA
0	0.0	4.0
5	1.0	5.6
10	2.0	7.2
15	3.0	8.8
20	4.0	10.4
25	5.0	12.0
30	6.0	13.6
35	7.0	15.2
40	8.0	16.8
45	9.0	18.4
50	10.0	20.0

Temperature table
MR: 0...+80 °C

°C	U_A in V	I_A in mA
0	0.0	4.0
5	0.6	5.0
10	1.3	6.0
15	1.9	7.0
20	2.5	8.0
25	3.1	9.0
30	3.8	10.0
35	4.4	11.0
40	5.0	12.0
45	5.6	13.0
50	6.3	14.0
55	6.9	15.0
60	7.5	16.0
65	8.1	17.0
70	8.8	18.0
75	9.4	19.0
80	10.0	20.0

Humidity table
MR: 0...100 % r. H.

% r.H.	U_A in V	I_A in mA
0	0.0	4.0
5	0.5	4.8
10	1.0	5.6
15	1.5	6.4
20	2.0	7.2
25	2.5	8.0
30	3.0	8.8
35	3.5	9.6
40	4.0	10.4
45	4.5	11.2
50	5.0	12.0
55	5.5	12.8
60	6.0	13.6
65	6.5	14.4
70	7.0	15.2
75	7.5	16.0
80	8.0	16.8
85	8.5	17.6
90	9.0	18.4
95	9.5	19.2
100	10.0	20.0

HYGRASREG® KHT-30 Duct hygrostat and humidity and temperature sensor (± 2.0 %), *Deluxe*

Type / WG02	Setting Range Humidity	Temperature	Output	Steps	Display	Item No.
KHT-30-I						**I-variant**
KHT-30W-I TYR2	5...95 % r. H.	–35...+75 °C –35...+35 °C 0...+50 °C 0...+80 °C	2 x changeover contact, 2x 4...20 mA	two-step	■	1202-8127-2421-000
KHT-30-U						**U-variant**
KHT-30W-U TYR2	5...95 % r. H.	–35...+75 °C –35...+35 °C 0...+50 °C 0...+80 °C	2 x changeover contact, 2x 0-10 V	two-step	■	1202-8127-1421-000
Accessories						
SF-M	**Metal** sinter filter, Ø 16 mm, L = 32 mm, exchangeable stainless steel **V4A** (1.4404)					7000-0050-2200-100

HYGRASREG® KW
HYGRASREG® KW-SD

Condensation control switches including strap / with detached sensor head, with switching output

S+S REGELTECHNIK

Patented quality product
(pro-dynamic cross convection patent no. DE 10 2012 015 726.6)

The condensation control switch **HYGR**ASREG® **KW** with terminal box enclosure made of impact-resistant plastic and with an enclosure cover with quick-locking screws or the cost-effective **HYGR**ASREG® **KW-SD** with snap-on lid is installed on cooling ceilings, on cooling /cold-water piping or on cooled surfaces and is designed to prevent the formation of condensation.

It reliably detects formation of dew by means of its humidity and temperature sensor (no conductivity measurement) and, thanks to its measuring method, **pro-dynamic cross convection**, yields an exact measurement result (with LED status indicator).

Dew point temperature is that temperature at which air reaches the state of saturation and water vapour starts to condensate. The KW condensation control switch can be operated as a monitor on cooling ceilings or pipes so that the switching output is activated when dew builds up on the cooling ceilings of the property to be monitored and e.g. a heating system is started, or other actuators are initiated.

KW-SD
with strap and snap-on lid (IP 43)



TECHNICAL DATA

Power supply:	24 V AC (± 20 %) 15...36 V DC
Switchpoint:	approx. 93 % r.H. (permanently set)
Power consumption:	< 1.1 VA / 24 V DC < 2.2 VA / 24 V AC
Output signal:	potential-free changeover contact (24 V), 1 A ohmic load
Process connection:	endless metal strap with metal tightener, 300 mm, for pipes up to 3 " diameter (included in the scope of delivery)
Electrical connection:	0.14 - 1.5 mm², via terminal screws
Enclosure:	plastic, UV-stabilised, material polyamide, 30 % glass-globe reinforced, colour traffic white (similar to RAL 9016), **KW-xx-SD** **with snap-on lid,** **KW-xx** **with quick-locking screws** (slotted / Phillips head combination), enclosure cover is transparent!
Enclosure dimensions:	**KW-xx-SD** 72 x 64 x **37.8 mm** (Tyr 01) **KW-xx** 72 x 64 x **43.3 mm** (Tyr 1)
Cable gland:	M 16 x 1.5; including strain relief, exchangeable, max. inner diameter 10.4 mm
Mounting:	The mounting position should be selected so that no condensate can enter the sensor system in the event that condensation forms! **KW / KW-SD** with strap for direct mounting on pipes or for direct mounting on flat surfaces (e.g. walls, ceilings) **KW-external / KW-SD-external** with detached sensor head (cable length KL = 1.5 m) for mounting on pipes
Protection class:	III (according to EN 60 730)
Protection type:	**KW-xx-SD** **IP 43** (according to EN 60 529) **KW-xx** **IP 65** (according to EN 60 529)
Standards:	CE-conformity, electromagnetic compatibility according to EN 61 326, EMC Directive 2014 / 30 / EU
FUNCTION	The relay output is triggered (contact 13-11 closed) if the **switchpoint (93 % r.H.)** is not reached and opens (contact 12-11 closed) in the event of a fault (power failure, condensation).



LED short pulses =
relay active → switchpoint not reached
ACTUAL humidity **< 93 % r.H. (no condensation)**



LED long pulses =
relay inactive → switchpoint exceeded
ACTUAL humidity **> 93 % r.H. (condensation)**

KW-SD-external
with detached sensor head and snap-on lid (IP 43)



Dimensional drawing **KW-xx**

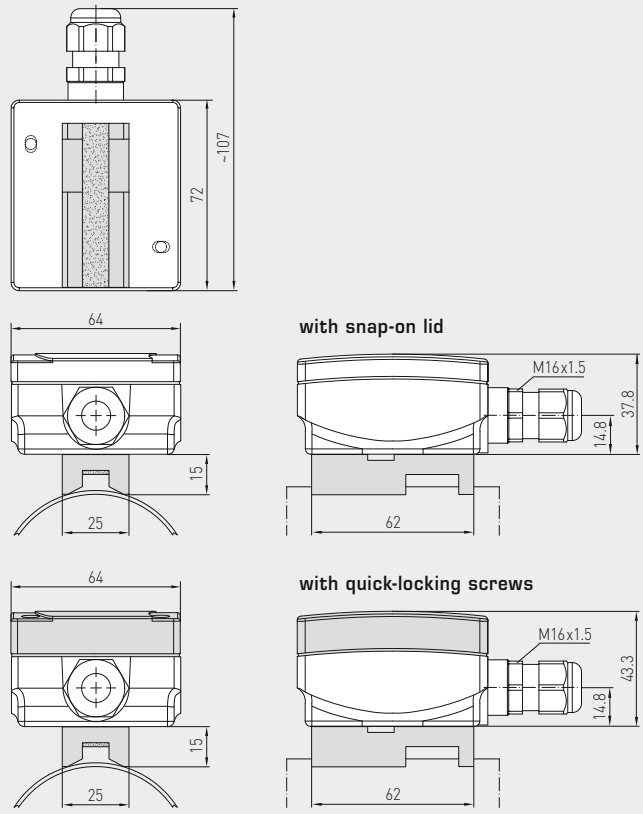

KW
with strap and
quick-locking screws
(IP 65)



Dimensional drawing **KW-xx-external**

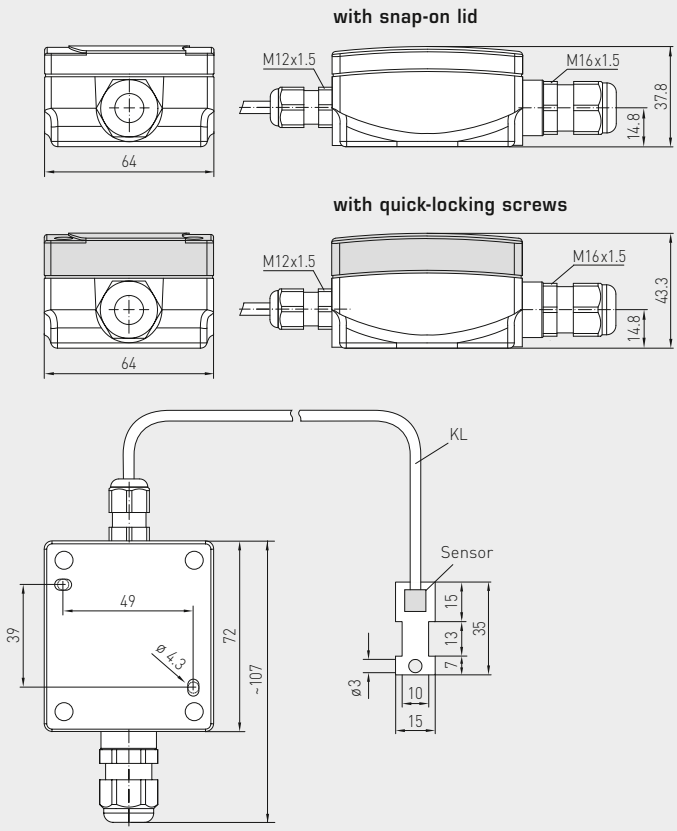

KW-external
with detached sensor head and
quick-locking screws
(IP 65)



HYGRASREG® KW
HYGRASREG® KW-SD

Condensation control switches including strap / with detached sensor head, with switching output

S+S REGELTECHNIK

Schematic diagram **KW-W-xx**

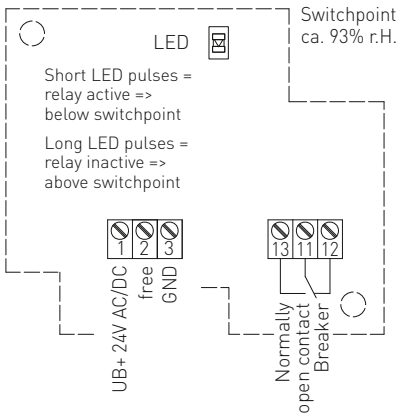

Connecting diagram (no condensation) **KW-W-xx**
r.H. < 93 %

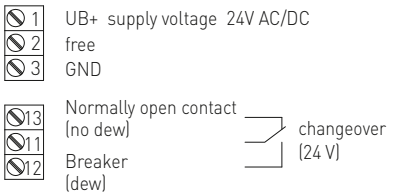

Connecting diagram (condensation) **KW-W-xx**
r.H. > 93 %

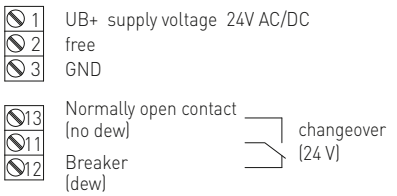

KW
pro-dynamic
cross convection



KW-SD
pro-dynamic
cross convection



PATENTED



HYGRASREG® KW-SD	Condensation control switches including strap,, *Standard*
HYGRASREG® KW-SD-external	Condensation control switches with detached sensor head, *Standard*

Type / WG01B	**Switchpoint** Humidity	**Output** Humidity	**Mounting**	**Item No.**
KW-SD			**Sensor internal**	**IP 43**
KW-W-SD	ca. 93 % r. H.	Changeover contact	for direct mounting on pipes, for direct mounting on flat surfaces	1202-1075-0001-020
KW-SD-external			**Sensor external**	**IP 43**
KW-W-SD EXTERN	ca. 93 % r. H.	Changeover contact	for mounting on pipes	1202-1075-0001-040

KW
with quick-locking screws
(IP 65)



KW-SD
with snap-on lid
(IP 43)



HYGRASREG® KW	Condensation control switches including strap, *Premium*
HYGRASREG® KW-external	Condensation control switches with detached sensor head, *Premium*

Type /WG01	**Switchpoint** Humidity	**Output** Humidity	**Mounting**	**Item No.**
KW			**Sensor internal**	**IP 65**
KW-W	ca. 93 % r. H.	Changeover contact	for direct mounting on pipes, for direct mounting on flat surfaces	1202-1025-0001-020
KW-external			**Sensor external**	**IP 65**
KW-W EXTERN	ca. 93 % r. H.	Changeover contact	for mounting on pipes	1202-1025-0001-040

Dew point control switches including strap / with detached sensor head, with active / switching outputs

S+S REGELTECHNIK

Patented quality product
(pro-dynamic cross convection patent no. DE 10 2012 015 726.6)

The dew point control switch **HYGR**ASREG® **TW** is installed on cooling / cold-water piping or on cooled surfaces. It reliably detects formation of dew by means of its humidity and temperature sensor (no conductivity measurement) and, thanks to its patented measuring method, **pro-dynamic cross convection**, yields an exact measurement result (with LED status display), **with / without display**.

Dew point temperature is that temperature at which air reaches the state of saturation and water vapour starts to condensate. Facilitated by the continuous measuring range from 0...100 % r.H. of the **TW-U** and the adjustable switchpoint for the **TW-W** of 75...100 % r.H., it is possible to operate cooling ceilings, for example, so that the switching output of the dew point control switch, the DDC, is activated and then triggers a heater or other control elements, thereby preventing the formation of dew on pipes or cooling ceilings or on the property to be monitored.

TW
with strap



TECHNICAL DATA

Power supply:	24 V AC (± 20 %) and 15...36 V DC
Power consumption:	< 1.1 VA / 24 V DC; < 2.2 VA / 24 V AC
Measuring Range:	formation of dew is detected at 0...100 % r.H. on the **TW-U**, continuous 75...100 % r.H. on the **TW-W**, switching (switchpoint adjustable by potentiometer, factory setting 75 % r.H.)
Sensors:	**digital humidity sensor** **with integrated temperature sensor,** small hysteresis, high long-term stability
Sensor protection:	membrane filter
Output signal:	0-10 V or potential-free changeover contact (24 V), 1 A ohmic load
Process connection:	endless metal strap with metal tightener, 300 mm, for pipes up to 3" diameter (included in the scope of delivery)
Electrical connection:	0.14 - 1.5 mm², via terminal screws
Enclosure:	plastic, UV-stabilised, material polyamide, 30 % glass-globe reinforced, with quick-locking screws (slotted / Phillips head combination), colour traffic white (similar to RAL 9016), enclosure cover is transparent!
Enclosure dimensions:	72 x 64 x 43.3 mm (Tyr 1)
Cable gland:	M 16 x 1.5, including strain relief, exchangeable, max. inner diameter 10.4 mm
Mounting:	**TW** with strap for direct mounting on pipes or for direct mounting on flat surfaces (e.g. walls, ceilings) **TW-external** with detached sensor head (cable length KL = 1.5 m) for mounting on pipes
Protection class:	III (according to EN 60 730)
Protection type:	IP 65 (according to EN 60 529)
Standards:	CE conformity, electromagnetic compatibility according to EN 61 326, EMC directive 2014 / 30 / EU
Optional:	two-line **display with illumination,** cutout approx. 36 x 15 mm (W x H), for displaying actual humidity and the switching status of the relay
FUNCTION	The relay output is triggered (contact 13-11 closed) if the **pre-set switchpoint** (factory setting 75 % r.H.) is not reached and opens (contact 12-11 closed) in the event of an error (power failure, condensation).
	**LED short pulses =** relay active → switchpoint not reached ACTUAL humidity **< pre-set switchpoint (no condensation)**
	**LED long pulses =** relay inactive → switchpoint exceeded ACTUAL humidity **> pre-set switchpoint (condensation)**

TW-external
with detached sensor head



Dimensional drawing **TW**

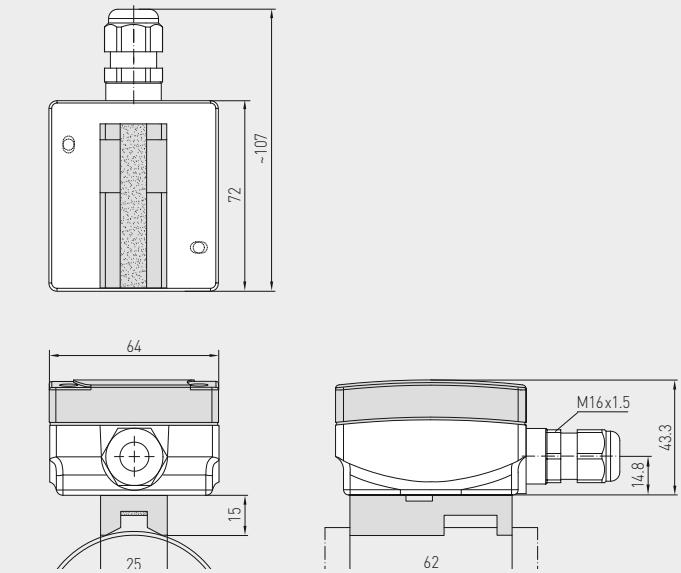

TW
with strap
and display



Dimensional drawing **TW-external**

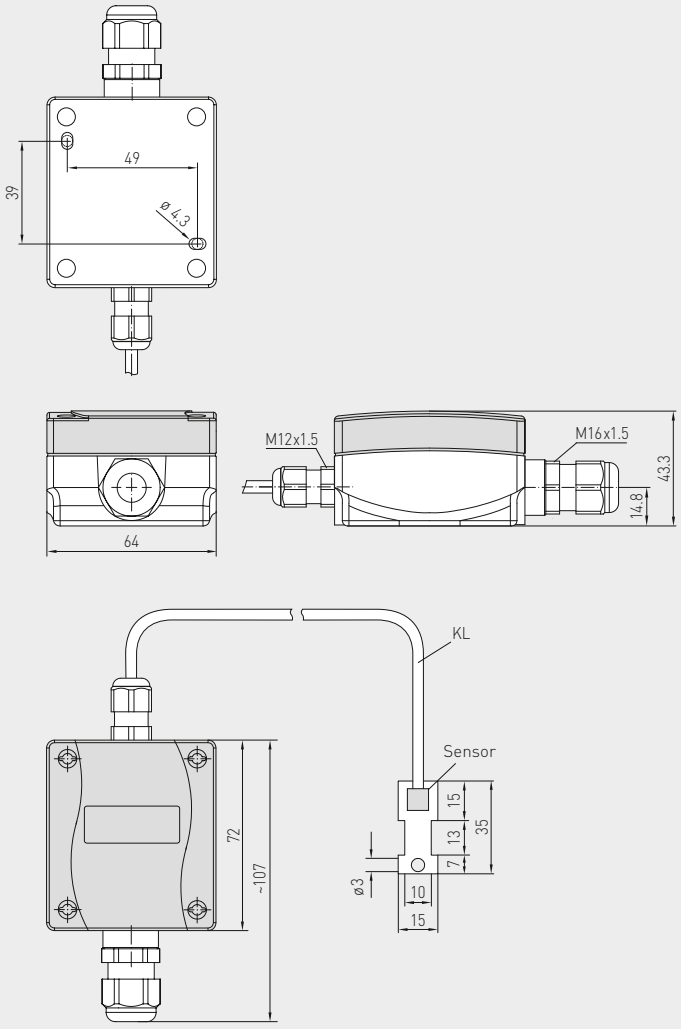

TW-external
with detached sensor head
and display



Dew point control switches including strap / with detached sensor head, with active / switching outputs

S+S REGELTECHNIK

Display **standard** — **TW-xx Display**



By default, the first line of the display shows the **relative humidity**.

The second line shows the information about the **switching status of the relay** (as a circuit) on the left, and the respective **switching value** in % r.H. on the right (switchpoint adjustable by potentiometer, factory setting 75 % r.H.).

○ **Circuit, empty** = relay in idle state
● **Circuit, full** = relay energised

TW
pro-dynamic
cross convection



PATENTED



Connecting diagram (no condensation) **r.H. < switchpoint** — **TW-UW**

1 UB+ supply voltage 24V AC/DC
2 Output bedewing 0-10V (continuous)
3 GND

13 / 11 / 12 Normally open contact (no dew) / Breaker (dew) — changeover (24 V)

Connecting diagram (no condensation) **r.H. < switchpoint** — **TW-W**

1 UB+ supply voltage 24V AC/DC
2 free
3 GND

13 / 11 / 12 Normally open contact (no dew) / Breaker (dew) — changeover (24 V)

Connecting diagram (condensation) **r.H. > switchpoint** — **TW-UW**

1 UB+ supply voltage 24V AC/DC
2 Output bedewing 0-10V (continuous)
3 GND

13 / 11 / 12 Normally open contact (no dew) / Breaker (dew) — changeover (24 V)

Connecting diagram (condensation) **r.H. > switchpoint** — **TW-W**

1 UB+ supply voltage 24V AC/DC
2 free
3 GND

13 / 11 / 12 Normally open contact (no dew) / Breaker (dew) — changeover (24 V)

Connecting diagram — **TW-U**

1 UB+ supply voltage 24V AC/DC
2 Output bedewing 0-10V (continuous)
3 GND

Schematic diagram — **TW-UW**

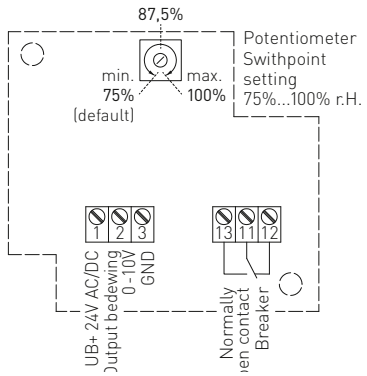

Schematic diagram — **TW-W**

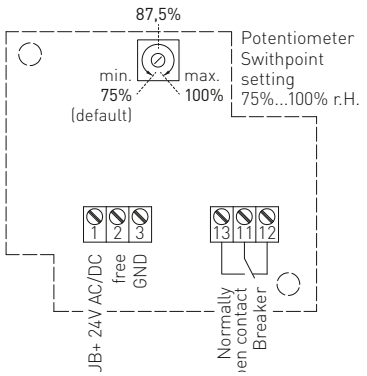

Schematic diagram — **TW-U**

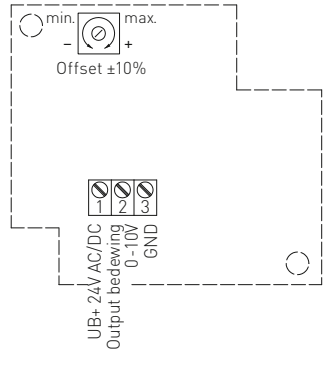

TW
with display



TW-external
with display



HYGRASREG® **TW**	Dew point control switches including strap (±3%), *Deluxe*
HYGRASREG® **TW-external**	Dew point control switches with detached sensor head (±3%), *Deluxe*

Type / WG01	Measuring Range Humidity	Output Humidity	Mounting	Display	Item No.
TW					**Sensor internal**
TW-W	75...100% r. H.	Changeover contact	for mounting directly on pipes		1202-1015-0001-000
TW-W DISPLAY	75...100% r. H.	Changeover contact	for mounting directly on pipes	■	1202-1015-1201-020
TW-U	0...100% r. H.	0-10 V	for mounting directly on pipes		1201-1011-1001-020
TW-U/W	0...100% r. H.	0-10 V + Changeover contact	for mounting directly on pipes		1202-1012-1001-020
TW-U/W DISPLAY	0...100% r. H.	0-10 V + Changeover contact	for mounting directly on pipes	■	1202-1012-1201-020
TW-external					**Sensor external**
TW-W EXTERN	75...100% r. H.	Changeover contact	for mounting on pipes		1202-1015-0021-030
TW-W EXTERN DISPLAY	75...100% r. H.	Changeover contact	for mounting on pipes	■	1202-1015-0221-030

Leakage sensor / water ingress detector with switching output

S+S REGELTECHNIK

The leakage sensor / water ingress detector **HYGR**ASREG® **LS** with leakage location is used to detect water ingresses and ingresses of conductive liquids. It is designed for the early detection of water leakages to protect sensitive electrical and electronic equipment in buildings against moisture.
The water ingress detector consists of an electronic monitoring system with LED status indicator, and a matching electrode, which can be extended by the user.

LS-2
(2 electrodes)



LS-4
(4 electrodes)







TECHNICAL DATA

Power supply:	24 V AC (±20 %) 15...36 V DC
Monitoring range:	conductive liquids between the probes
Switching threshold:	conductance between electrodes > threshold
Power consumption:	< 1.0 VA / 24 V DC < 2.2 VA / 24 V AC
Output signal:	potential-free changeover contact (24 V), 1 A ohmic load
Process connection:	two external probes, laid according to measuring task (on the **LS-2**) or upright on four electrodes with insulating plastic caps, which are mounted on the enclosure underside (on the **LS-4**)
Electrical connection:	0.14 - 1.5 mm² via terminal screws
Operating range electronics module:	10... 95 % r. H.; 0...+50 °C
Enclosure:	plastic, UV-stabilised, material polyamide, 30 % glass-globe reinforced, with quick-locking screws (slotted / Phillips head combination), colour traffic white (similar to RAL 9016), enclosure cover is transparent!
Enclosure dimensions:	72 x 64 x 43.3 mm (Tyr 1)
Cable gland:	M 16 x 1.5, including strain relief, exchangeable, max. inner diameter 10.4 mm
Protection class:	III (according to EN 60 730)
Protection type:	IP 65 (according to EN 60 529)
Standards:	CE conformity, electromagnetic compatibility according to EN 61 326, EMC directive 2014 / 30 / EU
Accessories:	for device type **LS-2** (2 electrodes 10 mm, already permanently mounted) **Electrode extension** 15 mm, 20 mm and 30 mm, 2 pieces each, brass, nickel-plated (enclosed) **Cable sensor**, L = 1 m (optional)
FUNCTION	The leak sensor can be set using DIP switches so that the relay is energised during normal operation. This means that relay opens in the event of a fault (water damage, cable breakage, power failure). This also enables a break in the cable to the sensor to be detected.

Schematic diagram **LS**

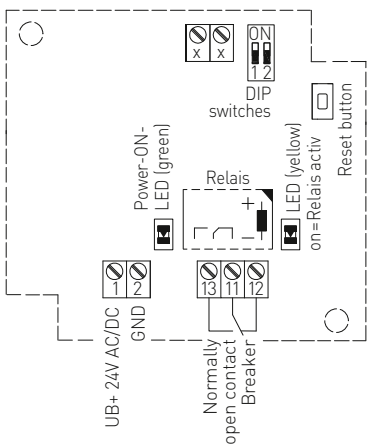

Self-locking (selectable)	**DIP 1**
Self-locking ON	**ON**
Self-locking OFF	OFF
Relay status (selectable)	**DIP 2**
Normally open contact OPEN	**ON**
Normally open contact CLOSED	OFF

Connecting diagram **LS**

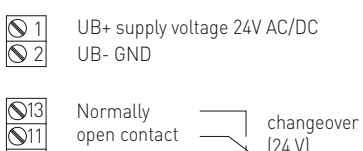

Dimensional drawing **LS-2**

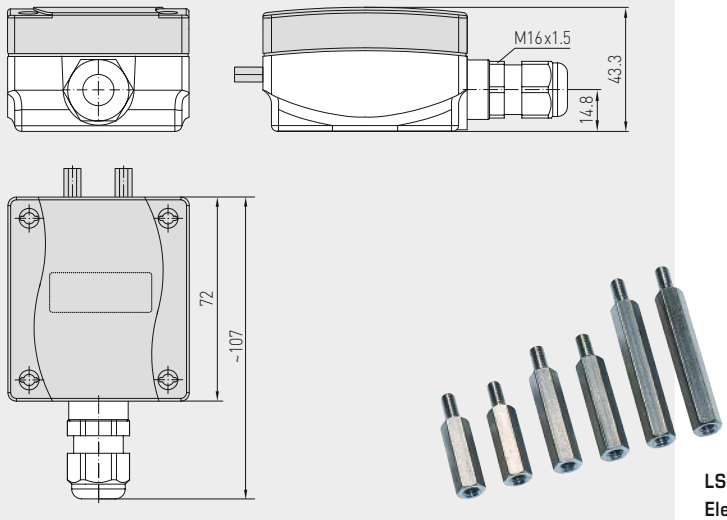

LS-2
Electrode
extensions

LS-2
(2 electrodes)



Dimensional drawing **LS-4**

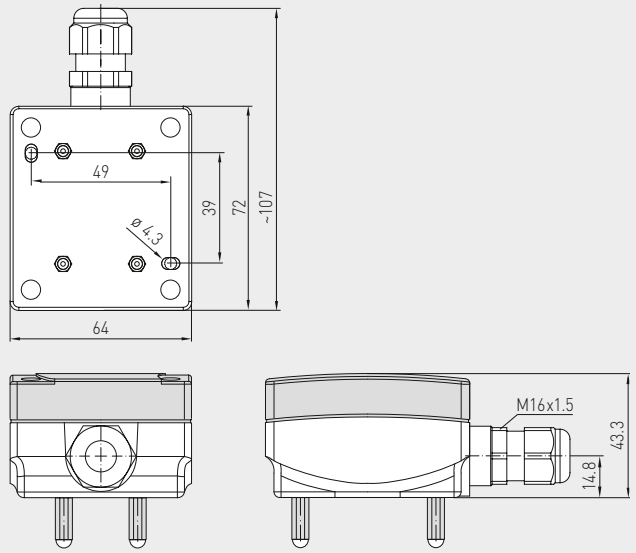

LS-4
(4 electrodes)



HYGRASREG® LS	Leakage sensor / water ingress detector		
Type / WG01	**Detection of leakage of conductive liquids**	**Output** Humidity (relative)	**Item No.**
LS-2			**2 electrodes**
LS-2	Conductance > switching threshold	Changeover contact	1202-1042-0000-000
LS-4			**4 electrodes**
LS-4	Conductance > switching threshold	Changeover contact	1202-1042-0000-100
Accessories			
LS-KABELSONDE	**Cable sensor**, L = 1 m, for device type **LS-2** (2 electrodes)		1202-1042-0000-001



Pressure

Whether absolute or relative, atmospheric, differential or below-atmospheric – our **PREM**ASGARD® and **PREM**ASREG® devices can handle any kind of pressure and provide the right solution for any pressurized environment. High-precision piezo-resistive sensors ensure reliable performance from 25 Pa to 300 bar.

APPLICATION RANGE

> Process and mechanical engineering
> Medical and cleanroom engineering
> Large catering facilities
> Heating, ventilation and air conditioning
> Pump control and pressure lines
> Filter monitoring and air pressure deficiency protection
> Rotational speed and limit value control



PREMASGARD® & **PREM**ASREG®

334 – 373

for gaseous media

PREMASGARD® **111x**	Pressure measuring transducer (mbar / Pa)	**349**
PREMASGARD® **112x**	Pressure measuring transducer (mbar / Pa)	**349**
PREMASGARD® **112x-SD**	Pressure measuring transducer (mbar / Pa)	**348**
PREMASGARD® **211x**	Pressure measuring transducer (mbar / Pa)	**343**
PREMASGARD® **212x**	Pressure measuring transducer (mbar / Pa)	**343**
PREMASGARD® **212x-SD**	Pressure measuring transducer (mbar / Pa)	**342**
PREMASGARD® **711x**	Pressure measuring transducer (mbar / Pa)	**353**
PREMASREG® **711x**	Pressure measuring transducer / switch (mbar / Pa)	**357**
ALD	Measuring transducer for atmospheric pressure (mbar)	**363**
DS 1 / DS 2	Differential pressure switch (mbar / Pa)	**367**

for volume flow

PREMASREG® **716x**	Volume flow measuring transducer / switch (mbar / Pa)	**361**

for liquid media

SHD	Pressure measuring transducer (bar)	**369**
SHD-SD	Pressure measuring transducer (bar)	**368**
SHD 400	Differential pressure transmitter (bar)	**371**
SHD 692	Differential pressure transmitter (bar)	**373**

Pressure

MADE IN GERMANY

PREMASGARD® & **PREM**ASREG®

Multifunctional sensor technology for the correct pressure

Broad Spectrum

Our pressure measuring transducers are designed to be multifunctional. This reduces the diversity of types while expanding their possible applications. Take advantage of our experience, our development, manufacturing and product know-how and order these products direct from the manufacturer S+S Regeltechnik. Thanks to microprocessor technology, almost any measuring range can be represented, including custom specifications. Multi-range switching, reaction times, units, automatic mode, and manual calibration are selectable via DIP switches.

Optimum Precision

The pressure sensors are developed and manufactured according to the latest criteria. They are fitted with the newest generation sensors that are linearised, temperature-compensated, and offer long-term and zero-point stability. The devices are produced at our factory and are calibrated and 100 % tested at our test benches and pressure chambers. Each sensor is precisely re-adjustable using offset potentiometers. Take advantage of our experience, our development, manufacturing, and product know-how, and order these products directly from the manufacturer.

Approved Safety

The **PREM**ASGARD® **1142** with current output (Test No. 51916-900022-2) and the **PREM**ASGARD® **1141** with voltage output (Test No. 51916-900022) are tested and certified according to DIN EN 61326-1:2006 and EN 61326-2-3:2006 by TÜV SÜD.

DIN tested/certified devices

RoHS conforming materials

ESD compliant manufacturing

CE compliance tested by external laboratories

Certified Quality

Our development and production in Nuremberg/Germany is certified by TÜV Thüringen according to DIN EN ISO 9001:2015.

GOST certificates

EAC certified

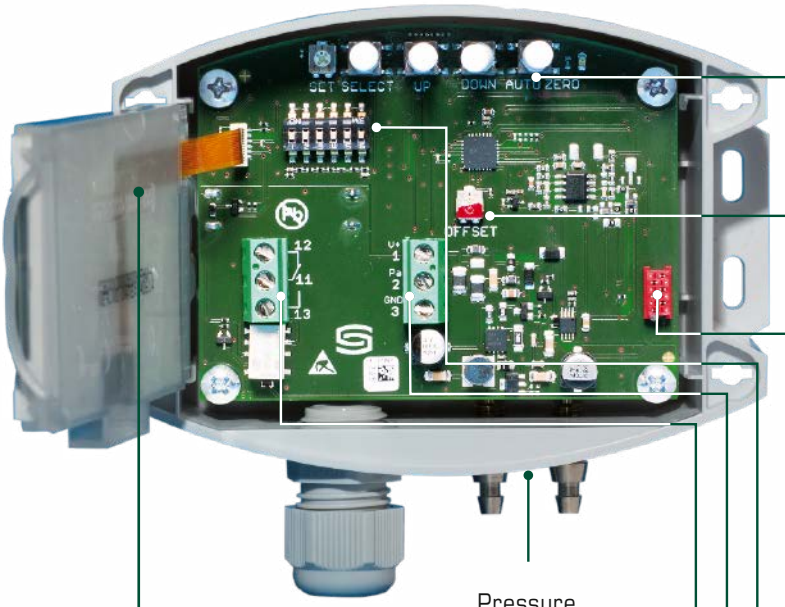

Pressure connection made of metal

1



Extra-Large Display (70 x 40 mm)

With backlighting as well as display of range violation, sensor breakage, sensor short circuit and physical units

2

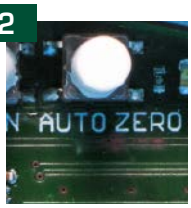

Auto-Zero

For zero point correction

3



Offset Potentiometer

For fine adjustment (zero point offset) and readjustment upon recalibration

4

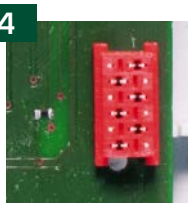

Quality Assurance

Calibration and balancing are done by means of the bus system at ther pressure test bench

5

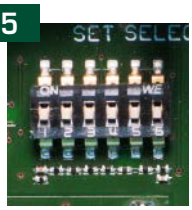

DIP Switches

For multi-range toggling as well as setting of 4 or 8 different measuring ranges, response times, damping times, units and configuration levels

6

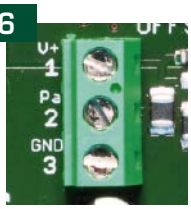

Screw Terminals

Active output signals 0 -10 V, 4...20 mA or switched output

7



Relais

With optional automatic zero point calibration and valve for zero point correction





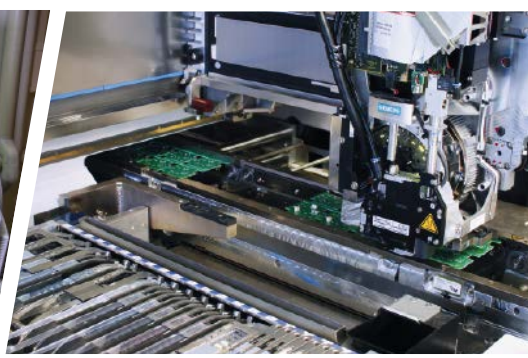

PREMASGARD® 211x/212x/212x-SD

Pressure, differential pressure and volume flow measuring transducers, including connection set, compact form, adjustable, calibratable, with multi-range switching and active output

NEW

S+S REGELTECHNIK

The calibrateable compact pressure sensors of the **PREM**ASGARD® **211x / 212x / 212x-SD** series are equipped with 8 switchable measuring ranges, 2 switchable output signals (16 devices in one) and with or without optional display and are used for measuring above-atmospheric, below-atmospheric, or differential pressures and Volume flow in air. The piezo-resistive measuring element is temperature-compensated and guarantees a high degree of reliability and accuracy. These pressure transmitters have a pushbutton for manual zero point calibration and an adjustable offset. Applications of these pressure sensors are in clean room, medical and filter technology, in ventilation and air conditioning ducts, in spray booths, in large-scale catering facilities, for monitoring filters, for level measurement or for triggering frequency converters. Media measured with these pressure transducers are air (non-precipitating), or other gaseous non-aggressive, non-combustible media. The differential pressure sensor is supplied including connection set **ASD-06** (2 m connection hose, two pressure connection nipples, screws).

PREMASGARD® **211x**
Pressure connectors **on the top side**, without display, with quick-locking screws (IP 65)





PREMASGARD® **212x-SD**
Pressure connectors **on the bottom side**, without display, with snap-on lid (IP 43)





TECHNICAL DATA

Power supply:	24 V AC/DC (± 10 %)
Working resistance:	R_a (Ohm) = 25 ...450 Ohm for I variant
Load resistance:	R_L > 25 kOhm for U variant
Power consumption:	< 1 W at 24 V DC; < 2 VA at 24 V AC
Current consumption:	< 45 mA
Measuring function:	**Differential pressure, volume flow** (square root output signal)
Measuring ranges:	**multi-range switching with 8 switchable measuring ranges** (see table)
Output:	**0-10 V or 4...20 mA** (selectable via DIP switches)
Electrical connection:	3-wire connection
Media temperature:	–20...+50 °C (temperature-compensated 0...+50 °C)
Pressure connection:	4 / 6 x 11 mm (hoses Ø = 4 / 6 mm), metal pressure connectors
Type of pressure:	differential pressure
Medium:	clean air and other non-aggressive, non-combustible gases
Accuracy:	**Type 2110 / 2120 / 2120-SD** (100 Pa): typically ± 3 Pa at +25 °C **Type 2111 / 2121 / 2121-SD** (1000 Pa): typically ± 10 Pa at +25 °C **Type 2115 / 2125 / 2125-SD** (5000 Pa): typically ± 35 Pa at +25 °C compared to the calibrated reference device
Zero point offset:	± 10 % of final value
Above- / below-atmospheric pressure:	± 50 kPa
Long-term stability:	± 1 % per year
Signal filtering:	**switchable 1 s / 10 s**
Hysteresis:	0.3 % of final value
Media contacting parts:	Brass, Ni, Duroplast, Si, epoxy, RTV, BSG, UV silicone gel
Temperature drift values:	± 0.1 % of final value / °C
Linearity:	< ± 1 % of final value
Enclosure:	plastic, UV-stabilised, material polyamide, 30 % glass-globe reinforced, colour traffic white (similar to RAL 9016) **Type 211x / 212x**: **with quick-locking screws** (slotted/Phillips head combination) enclosure cover for display is transparent! **Type 212x-SD**: **with snap-on lid**
Enclosure dimensions:	72 x 64 x 37.8 mm (Tyr 1 / Tyr 01 without display) 72 x 64 x 43.3 mm (Tyr 1 with display)
Cable gland:	M 16 x 1.5, including strain relief, exchangeable, max. inner diameter 10.4 mm
Electrical connection:	0.14 - 1.5 mm², via terminal screws
Humidity:	< 95 % r. H., non-precipitating air
Protection class:	III (according to EN 60 730)
Protection type:	**Type 211x / 212x**: **IP 65** (according to EN 60 529) **Type 212x-SD**: **IP 43** (according to EN 60 529)
Standards:	CE conformity, electromagnetic compatibility according to EN 61 326, EMC directive 2014 / 30 / EU
Features:	two-line **display with illumination**, cutout approx. 36 x 15 mm (W x H), to display ACTUAL pressure
ACCESSORIES	
ASD-06	Connection set (nipple straight) – (included in the scope of delivery)
ASD-07	Connection nipple (at 90° angle)
DAL-01	Pressure outlet for ceiling or in-wall installation (e.g. in clean rooms)
WS-04	Weather and sun protection hood, 130 x 180 x 135 mm, stainless steel **V2A** (1.4301)

Pressure, differential pressure and volume flow measuring transducers, including connection set, compact form, adjustable, calibratable, with multi-range switching and active output

Dimensional drawing

PREMASGARD® 211x

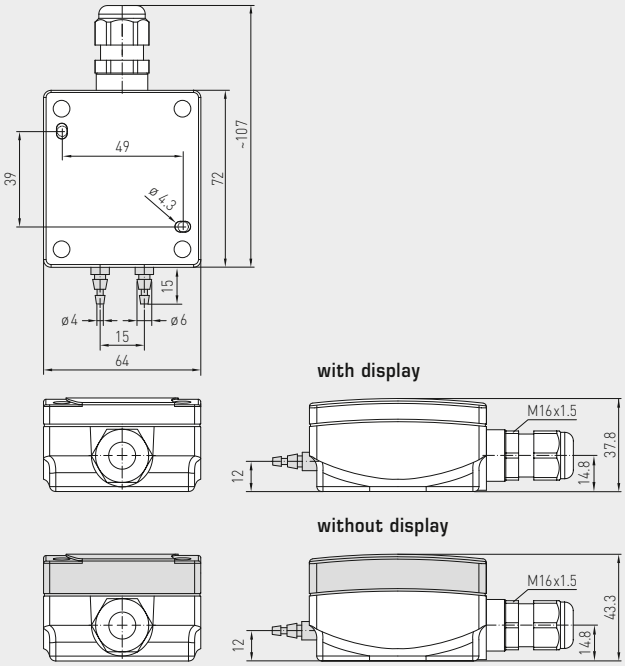

PREMASGARD® 211x
Pressure connectors
on the top side,
with display,
with quick-locking screws
(IP 65)





Dimensional drawing

PREMASGARD® 212x
PREMASGARD® 212x-SD

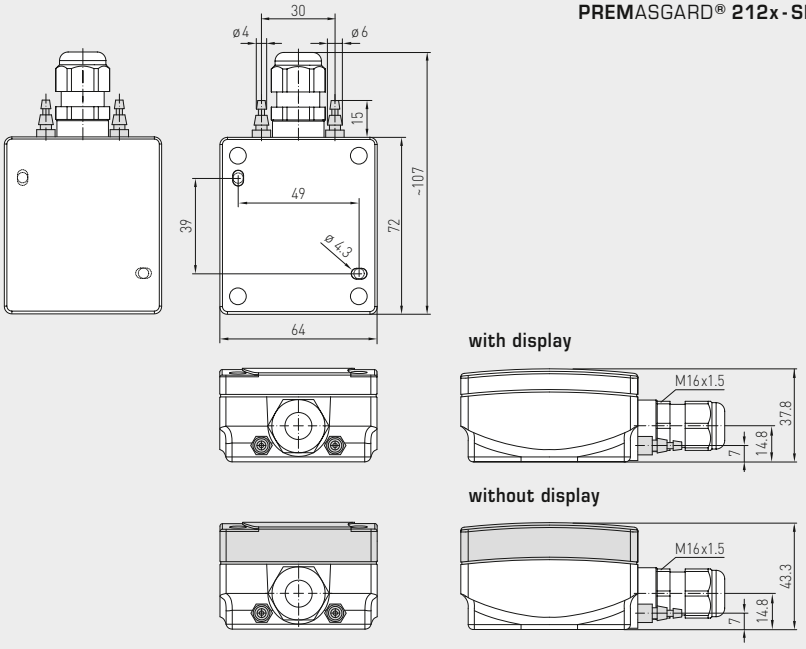

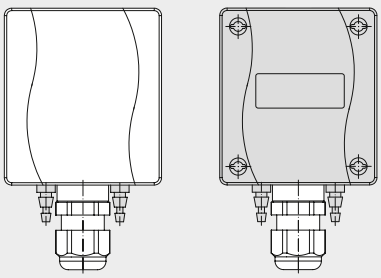

with snap-on lid
(IP 43)

with quick-locking screws
(IP 65)

PREMASGARD® 212x
Pressure connectors
on the bottom side,
with display,
with quick-locking screws
(IP 65)





PREMASGARD® 211x/212x/212x-SD

Pressure, differential pressure and volume flow measuring transducers, including connection set, compact form, adjustable, calibratable, with multi-range switching and active output

NEW

S+S REGELTECHNIK

Schematic diagram

PREMASGARD® 211x
PREMASGARD® 212x
PREMASGARD® 212x-SD

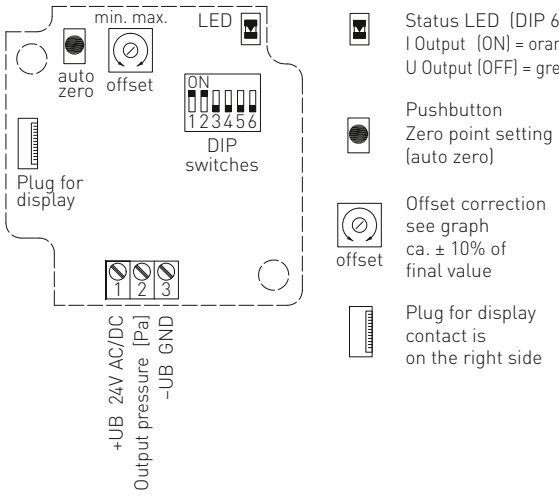

Load resistance diagram 4...20 mA

PREMASGARD® 211x
PREMASGARD® 212x
PREMASGARD® 212x-SD

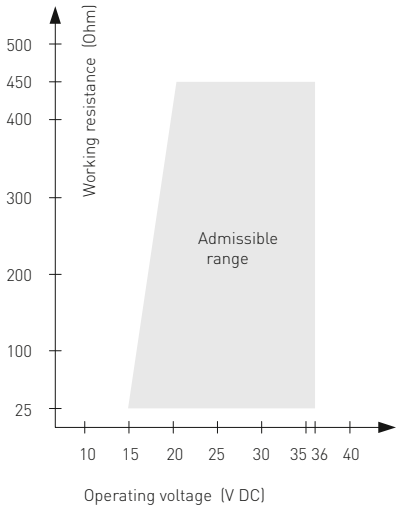

PREMASGARD® 21xx

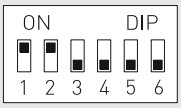

Pressure range (selectable) – max. measuring range (default) is depending to the type of device						**DIP 1**	**DIP 2**
0...50 Pa	0...100 Pa	0...1000 Pa	–50...+50 Pa	–100...+100 Pa	–1000...+1000 Pa	OFF	OFF
–	0...300 Pa	0...2000 Pa	–	–300...+300 Pa	–2000...+2000 Pa	**ON**	OFF
–	0...500 Pa	0...3000 Pa	–	–500...+500 Pa	–3000...+3000 Pa	OFF	**ON**
0...100 Pa	**0...1000 Pa**	**0...5000 Pa**	**–100...+100 Pa**	**–1000...+1000 Pa**	**–5000...+5000 Pa**	**ON**	**ON**

Output characteristic line (Mode selectable)	**DIP 4**
Linear (default) (for pressure detection)	OFF
Square root extracting (to determine the volume flow)	**ON**

Measuring range mode (Mode selectable)	**DIP 3**
Unidirectional (0...+MR) (default)	OFF
Bidirectional (–MR...+MR)	**ON**

Measurement signal filtering (Time interval selectable)	**DIP 5**
10 s (default)	OFF
1 s	**ON**

Output (selectable)	**DIP 6**
Voltage 0-10 V (default)	OFF
Current 4... 20 mA	**ON**

Mounting diagram

PREMASGARD® 211x

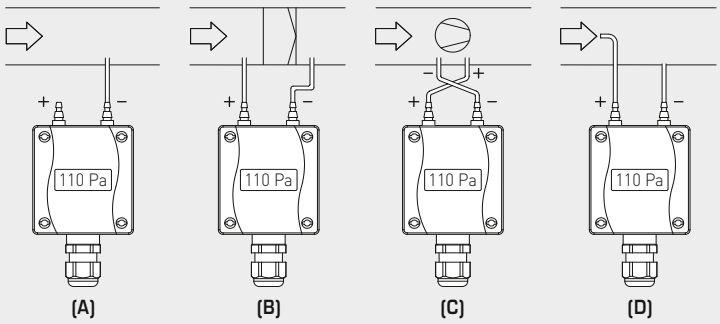

Mounting diagram

PREMASGARD® 212x / 212x-SD

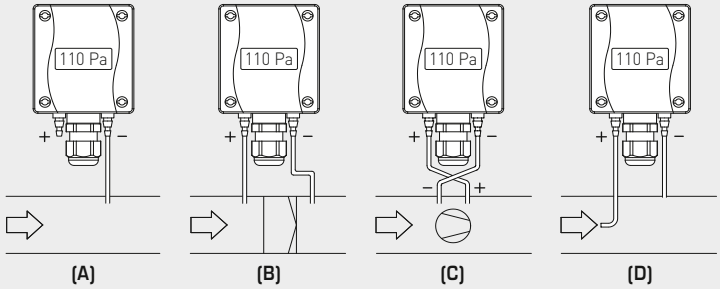

TYPES OF MONITORING:

Pressure connections at the pressure switch are marked with
P1 (+) for higher pressure and
P2 (–) for lower pressure.

(A) Below-atmospheric pressure
P1 (+) is not connected, but open to the atmosphere
P2 (–) connected to inside of duct

(B) Filter
P1 (+) connected upstream of filter
P2 (–) connected downstream of filter

(C) Ventilator
P1 (+) connected downstream of ventilator
P2 (–) connected upstream of ventilator

(D) Volume flow
P1 (+) dynamic pressure, connected in flow direction
P2 (–) static pressure, connected free of dynamic pressure components

$$V = k \cdot \sqrt{\Delta p}$$

V = Volume flow
k = K factor
Δp = Differential pressure [Pa]

Pressure, differential pressure and volume flow measuring transducers, including connection set, compact form, adjustable, calibratable, with multi-range switching and active output

PREMASGARD® **211x**
Pressure connectors **on the top side**, with display





PREMASGARD® **212x**
Pressure connectors **on the bottom side**, with display





WS-04
Weather and sun protection hood (optional)



Conversion table for pressure values:

Unit =	bar	mbar	Pa	kPa	mH_2O
1 Pa	0.00001 bar	0.01 mbar	1 Pa	0.001 kPa	0.000101971 mH_2O
1 kPa	0.01 bar	10 mbar	1000 Pa	1 kPa	0.101971 mH_2O
1 bar	1 bar	1000 mbar	100000 Pa	100 kPa	10.1971 mH_2O
1 mbar	0.001 bar	1 mbar	100 Pa	0.1 kPa	0.0101971 mH_2O
1 mH_2O	0.0980665 bar	98.0665 mbar	9806.65 Pa	9.80665 kPa	1 mH_2O

PREMASGARD® 211x/212x/212x-SD

Pressure, differential pressure and volume flow measuring transducers, including connection set, compact form, adjustable, calibratable, with multi-range switching and active output

NEW

S+S REGELTECHNIK

Dimensional drawing **ASD-06** Connection set

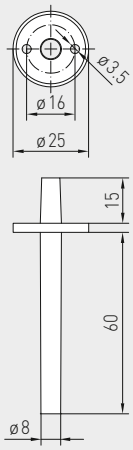

Dimensional drawing **ASD-07** Connection nipple

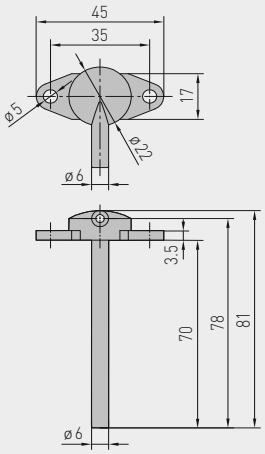

Dimensional drawing **DAL-01** Pressure outlet

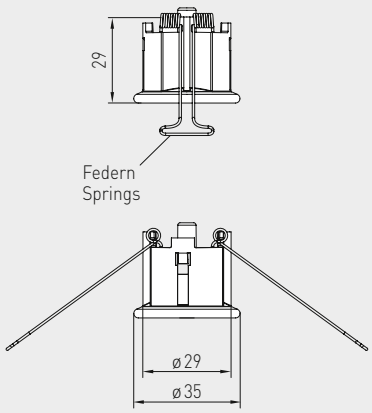

ASD-06 Connection set



ASD-07 Connection nipple



DAL-01 Pressure outlet



Accessories		Item No.
ASD-06	**Connection set (included in the scope of delivery),** consisting of 2 connection nipples (straight) made of ABS, 2 m PVC hose, soft, and 4 tapping screws	7100-0060-3000-000
ASD-07	**2 connection nipples** (at 90 degree angle) made of plastic, ABS	7100-0060-7000-000
DAL-01	**Pressure outlet** for ceiling or in-wall installation (e.g. in clean rooms)	7300-0060-3000-001
WS-04	**Weather and sun protection hood**, 130 x 180 x 135 mm, stainless steel **V2A** (1.4301)	7100-0040-7000-000
	For further information, see last chapter Accessories!	

PREMASGARD® 212x-SD	Pressure, differential pressure and volume flow measuring transducers, *Standard* (Pressure connectors on the bottom side)		
Pressure range (Ranges adjustable)	**Type / WG01**	**Output** (switchable)	**Item No.** (with snap-on lid)
max. – 1000...+ 1000 Pa	**PREMASGARD® 2121-SD**		**IP 43**
0... 100 Pa / – 100...+ 100 Pa 0... 300 Pa / – 300...+ 300 Pa 0... 500 Pa / – 500...+ 500 Pa 0... 1000 Pa / – 1000...+ 1000 Pa	PREMASGARD 2121-SD	0-10 V / 4...20 mA	1301-11B7-0010-000
max. – 5000...+ 5000 Pa	**PREMASGARD® 2125-SD**		**IP 43**
0...1000 Pa / – 1000...+ 1000 Pa 0...2000 Pa / – 2000...+ 2000 Pa 0...3000 Pa / – 3000...+ 3000 Pa 0...5000 Pa / – 5000...+ 5000 Pa	PREMASGARD 2125-SD	0-10 V / 4...20 mA	1301-11B7-0050-000
max. – 100...+ 100 Pa	**PREMASGARD® 2120-SD**		**IP 43**
0... 50 Pa / – 50...+ 50 Pa 0... 100 Pa / – 100...+ 100 Pa	PREMASGARD 2120-SD	0-10 V / 4...20 mA	1301-11B7-0110-000
Multi-range switching:	The **pressure ranges** depend on the device type and can be set via DIP switches.		
Output:	**0-10 V or 4...20 mA** (selectable via DIP switches)		

Pressure, differential pressure and volume flow measuring transducers, including connection set, compact form, adjustable, calibratable, with multi-range switching and active output

PREMASGARD® **211x**
Pressure connectors
on the top side,
with/without display,
with quick-locking screws
(IP 65)

PREMASGARD® **212x**
Pressure connectors
on the bottom side,
with/without display,
with quick-locking screws
(IP 65)

PREMASGARD® **212x-SD**
Pressure connectors
on the bottom side,
without display,
with snap-on lid
(IP 43)



PREMASGARD® **211x**	Pressure, differential pressure and volume flow measuring transducers, *Premium* (Pressure connectors on the top side)			
Pressure range (Ranges adjustable)	**Type /WG01**	**Output** (switchable)	**Display**	**Item No.** (with quick-locking screws)
max. – 1000...+ 1000 Pa	**PREM**ASGARD® **2111**			**IP 65**
0... 100 Pa / – 100...+ 100 Pa 0... 300 Pa / – 300...+ 300 Pa 0... 500 Pa / – 500...+ 500 Pa 0... 1000 Pa / – 1000...+ 1000 Pa	PREMASGARD 2111	0-10 V / 4...20 mA		1301-1197-0010-000
	PREMASGARD 2111 LCD	0-10 V / 4...20 mA	■	1301-1197-2010-000
max. – 5000...+ 5000 Pa	**PREM**ASGARD® **2115**			**IP 65**
0...1000 Pa / – 1000...+ 1000 Pa 0...2000 Pa / – 2000...+ 2000 Pa 0...3000 Pa / – 3000...+ 3000 Pa 0...5000 Pa / – 5000...+ 5000 Pa	PREMASGARD 2115	0-10 V / 4...20 mA		1301-1197-0050-000
	PREMASGARD 2115 LCD	0-10 V / 4...20 mA	■	1301-1197-2050-000
max. – 100...+ 100 Pa	**PREM**ASGARD® **2110**			**IP 65**
0... 50 Pa / – 50...+ 50 Pa 0... 100 Pa / – 100...+ 100 Pa	PREMASGARD 2110	0-10 V / 4...20 mA		1301-1197-0110-000
	PREMASGARD 2110 LCD	0-10 V / 4...20 mA	■	1301-1197-2110-000
Multi-range switching:	The **pressure ranges** depend on the device type and can be set via DIP switches.			
Output:	**0-10 V or 4...20 mA** (selectable via DIP switches)			

PREMASGARD® **212x**	Pressure, differential pressure and volume flow measuring transducers, *Premium* (Pressure connectors on the bottom side)			
Pressure range (Ranges adjustable)	**Type / WG01**	**Output** (switchable)	**Display**	**Item No.** (with quick-locking screws)
max. – 1000...+ 1000 Pa	**PREM**ASGARD® **2121**			**IP 65**
0... 100 Pa / – 100...+ 100 Pa 0... 300 Pa / – 300...+ 300 Pa 0... 500 Pa / – 500...+ 500 Pa 0... 1000 Pa / – 1000...+ 1000 Pa	PREMASGARD 2121	0-10 V / 4...20 mA		1301-11A7-0010-000
	PREMASGARD 2121 LCD	0-10 V / 4...20 mA	■	1301-11A7-2010-000
max. – 5000...+ 5000 Pa	**PREM**ASGARD® **2125**			**IP 65**
0...1000 Pa / – 1000...+ 1000 Pa 0...2000 Pa / – 2000...+ 2000 Pa 0...3000 Pa / – 3000...+ 3000 Pa 0...5000 Pa / – 5000...+ 5000 Pa	PREMASGARD 2125	0-10 V / 4...20 mA		1301-11A7-0050-000
	PREMASGARD 2125 LCD	0-10 V / 4...20 mA	■	1301-11A7-2050-000
max. – 100...+ 100 Pa	**PREM**ASGARD® **2120**			**IP 65**
0... 50 Pa / – 50...+ 50 Pa 0... 100 Pa / – 100...+ 100 Pa	PREMASGARD 2120	0-10 V / 4...20 mA		1301-11A7-0110-000
	PREMASGARD 2120 LCD	0-10 V / 4...20 mA	■	1301-11A7-2110-000
Multi-range switching:	The **pressure ranges** depend on the device type and can be set via DIP switches.			
Output:	**0-10 V or 4...20 mA** (selectable via DIP switches)			

PREMASGARD® 111x/112x/112x-SD

Pressure, differential pressure and volume flow measuring transducers, including connection set, compact form, adjustable, calibratable, with multi-range switching and active output

I variant with 2-wire connection

S+S REGELTECHNIK

The calibrateable compact pressure sensors of the **PREM**ASGARD® **111x / 112x / 112x-SD** series are equipped with eight switchable measuring ranges and with or without optional display (eight devices in one) and are used for measuring above-atmospheric, below-atmospheric, or differential pressures and Volume flow in air. The piezo-resistive measuring element is temperature-compensated and guarantees a high degree of reliability and accuracy. These pressure transmitters have a pushbutton for manual zero point calibration and an adjustable offset. Applications of these pressure sensors are in clean room, medical and filter technology, in ventilation and air conditioning ducts, in spray booths, in large-scale catering facilities, for monitoring filters, for level measurement or for triggering frequency converters. Media measured with these pressure transducers are air (non-precipitating), or other gaseous non-aggressive, non-combustible media. The differential pressure sensor is supplied including connection set **ASD-06** (2 m connection hose, two pressure connection nipples, screws). You can find further device types under **PREM**ASGARD® **211x / 212x / 212x-SD** (3-conductor connection) with switchable output (0-10 V / 4...20 mA).

PREMASGARD® **111x**
Pressure connectors **on the top side**, without display, with quick-locking screws (IP 65)





TECHNICAL DATA

Power supply:	24 V AC (± 20 %); 15...36 V DC for U variant 15...36 V DC for I variant, depending on working resistance, residual ripple stabilised ± 0.3 V
Working resistance:	R_a (ohm) = (U_b -14 V) / 0.02 A for I variant
Load resistance:	R_L > 5 kOhm for U variant
Power consumption:	< 1 W at 24 V DC; < 2 VA at 24 V AC
Measuring function:	**Differential pressure, volume flow** (square root output signal)
Measuring ranges:	**multi-range switching with 8 switchable measuring ranges** (see table)
Output signal:	0 -10 V or 4...20 mA
Electrical connection:	2- or 3-wire connection
Media temperature:	–20...+50 °C
Pressure connection:	4 / 6 x 1 mm (hoses Ø = 4 / 6 mm), metal pressure connectors
Type of pressure:	differential pressure
Medium:	clean air and other non-aggressive, non-combustible gases
Accuracy:	**Type 1111 / 1121 / 1121-SD** (1000 Pa): typically ± 10 Pa **Type 1115 / 1125 / 1125-SD** (5000 Pa): typically ± 50 Pa **Type 1116 / 1126** (10000 Pa): typically ± 50 Pa compared to the calibrated reference device
Zero point offset:	± 10 % of final value
Above- / below-atmospheric pressure:	max. 5 x measuring range
Long-term stability:	± 1 % per year
Signal filtering:	**switchable 1 s / 10 s**
Hysteresis:	0.3 % of final value
Media contacting parts:	ms, Ni, Nylon, PU, Si, PVC with plasticisers
Temperature drift values:	± 0.1 % of final value / °C
Current consumption:	< 20 mA
Linearity:	< ± 1 % of final value
Enclosure:	plastic, UV-stabilised, material polyamide, 30 % glass-globe reinforced, colour traffic white (similar to RAL 9016) **Type 111x / 112x**: **with quick-locking screws** (slotted/Phillips head combination) enclosure cover for display is transparent! **Type 112x-SD**: **with snap-on lid**
Enclosure dimensions:	72 x 64 x 37.8 mm (Tyr 1 / Tyr 01 without display) 72 x 64 x 43.3 mm (Tyr 1 with display)
Cable gland:	M 16 x 1.5, including strain relief, exchangeable, max. inner diameter 10.4 mm
Electrical connection:	0.14 - 1.5 mm², via terminal screws
Humidity:	< 95 % r. H., non-precipitating air
Protection class:	III (according to EN 60 730)
Protection type:	**Type 111x / 112x**: **IP 65** (according to EN 60 529) **Type 112x-SD**: **IP 43** (according to EN 60 529)
Standards:	CE conformity, electromagnetic compatibility according to EN 61 326, EMC directive 2014 / 30 / EU
Features:	two-line **display with illumination**, cutout approx. 36 x 15 mm (W x H), to display ACTUAL pressure
ACCESSORIES	
ASD-06	Connection set (nipple straight) – (included in the scope of delivery)
ASD-07	Connection nipple (at 90° angle)
DAL-01	Pressure outlet for ceiling or in-wall installation (e.g. in clean rooms)
WS-04	Weather and sun protection hood, 130 x 180 x 135 mm, stainless steel **V2A** (1.4301)

PREMASGARD® **112x-SD**
Pressure connectors **on the bottom side**, without display, with snap-on lid (IP 43)





Dimensional drawing

PREMASGARD® **111x**

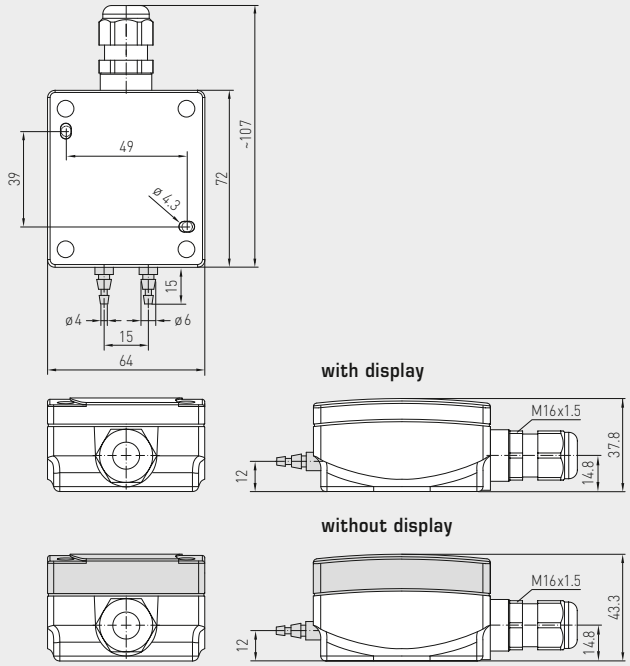

PREMASGARD® **111x**
Pressure connectors
on the top side,
with display,
with quick-locking screws
(IP 65)





Dimensional drawing

PREMASGARD® **112x**
PREMASGARD® **112x-SD**

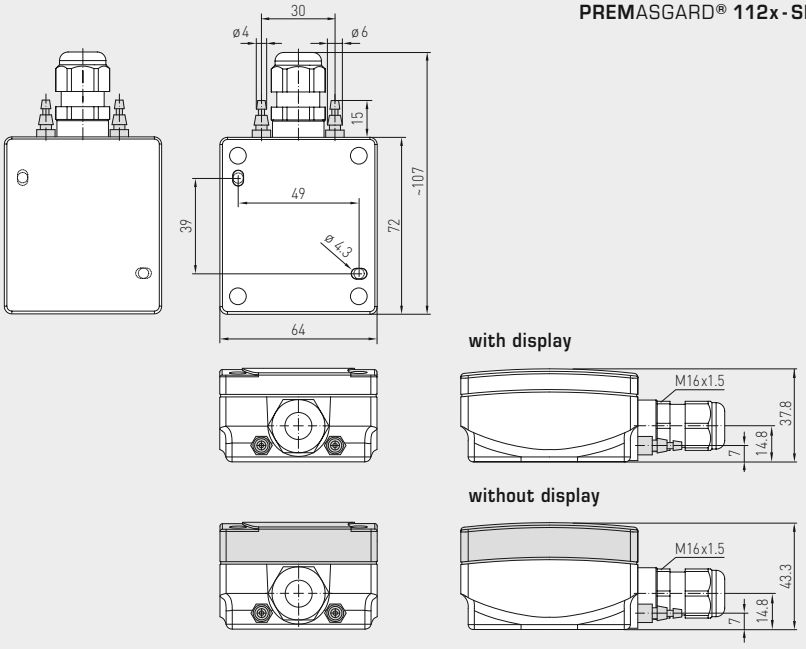

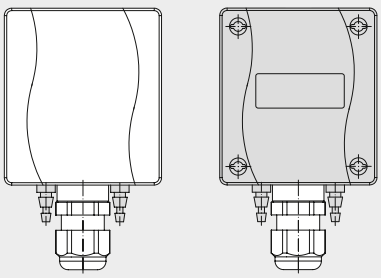

with snap-on lid
(IP 43)

with quick-locking screws
(IP 65)

PREMASGARD® **112x**
Pressure connectors
on the bottom side,
with display,
with quick-locking screws
(IP 65)





PREMASGARD® 111x/112x/112x-SD

Pressure, differential pressure and volume flow measuring transducers, including connection set, compact form, adjustable, calibratable, with multi-range switching and active output

I variant with 2-wire connection

S+S REGELTECHNIK

Schematic diagram
Output:
0-10 V

PREMASGARD® 111x-U
PREMASGARD® 112x-U
PREMASGARD® 112x-SD-U

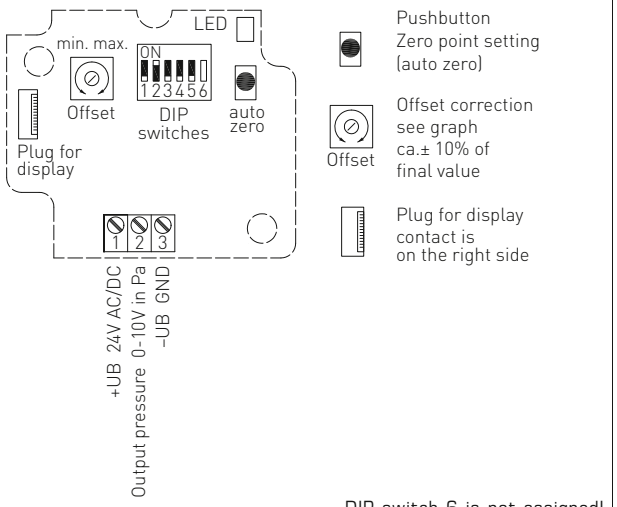

Pushbutton
Zero point setting
(auto zero)

Offset correction
see graph
ca.± 10% of
final value

Plug for display
contact is
on the right side

DIP switch 6 is not assigned!

Schematic diagram *
Output:
4...20 mA

PREMASGARD® 111x-I
PREMASGARD® 112x-I
PREMASGARD® 112x-SD-I

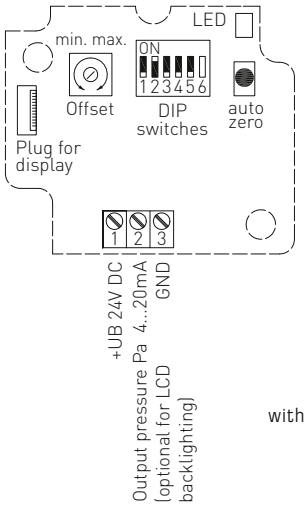

Pushbutton
Zero point setting
(auto zero)

Offset correction
see graph
ca.± 10% of
final value

Plug for display
contact is
on the right side

* Connection:
2-wire connection for devices with / without display (not illuminated)
3-wire connection for devices with illuminated display

DIP switch 6 is not assigned!

Pressure range (selectable) – max. measuring range (default) is depending to the type of device						**DIP 1**	**DIP 2**
0...100 Pa	0...1000 Pa	0...4000 Pa	–100...+100 Pa	–1000...+1000 Pa	–4000...+4000 Pa	OFF	OFF
0...300 Pa	0...2000 Pa	0...6000 Pa	–300...+300 Pa	–2000...+2000 Pa	–6000...+6000 Pa	**ON**	OFF
0...500 Pa	0...3000 Pa	0...8000 Pa	–500...+500 Pa	–3000...+3000 Pa	–8000...+8000 Pa	OFF	**ON**
0...1000 Pa	**0...5000 Pa**	**0...10000 Pa**	**–1000...+1000 Pa**	**–5000...+5000 Pa**	**–10000...+10000 Pa**	**ON**	**ON**

PREMASGARD® 11xx

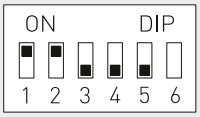

DIP switch 6
is not assigned!

Measuring range mode (Mode selectable)	**DIP 3**
Unidirectional (0...+MR) (default)	OFF
Bidirectional (–MR...+MR)	**ON**

Output characteristic line (Mode selectable)	**DIP 4**
Linear (default) (for pressure detection)	OFF
Square root extracting (to determine the volume flow)	**ON**

Measurement signal filtering (Time interval selectable)	**DIP 5**
10 s (default)	OFF
1 s	**ON**

Mounting diagram **PREMASGARD® 111x**

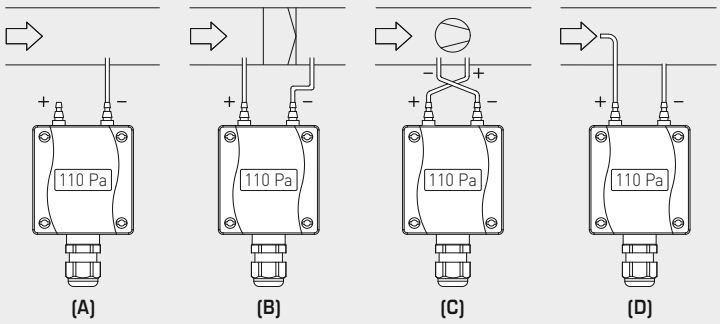

Mounting diagram **PREMASGARD® 112x / 112x-SD**

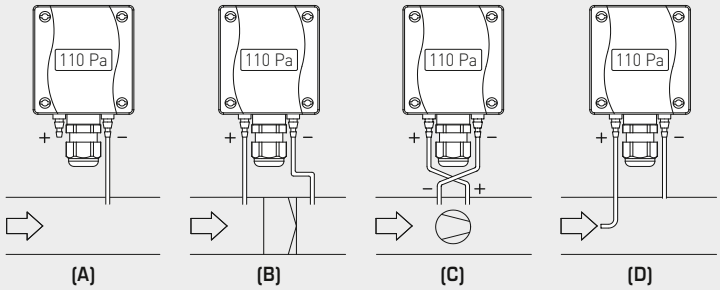

TYPES OF MONITORING:

Pressure connections at the pressure switch are marked with
P1 (+) for higher pressure and
P2 (–) for lower pressure.

(A) Below-atmospheric pressure
P1 (+) is not connected, but open to the atmosphere
P2 (–) connected to inside of duct

(B) Filter
P1 (+) connected upstream of filter
P2 (–) connected downstream of filter

(C) Ventilator
P1 (+) connected downstream of ventilator
P2 (–) connected upstream of ventilator

(D) Volume flow
P1 (+) dynamic pressure, connected in flow direction
P2 (–) static pressure, connected free of dynamic pressure components

$$V = k \cdot \sqrt{\Delta p}$$

V = Volume flow
k = K factor
Δp = Differential pressure [Pa]

Load resistance diagram 4...20 mA

PREMASGARD® **111x**
PREMASGARD® **112x**
PREMASGARD® **112x-SD**

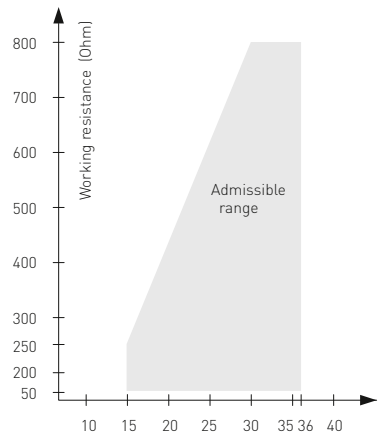

PREMASGARD® **111x**
Pressure connectors **on the top side**, with display



PREMASGARD® **112x**
Pressure connectors **on the bottom side**, with display



WS-04
Weather and sun protection hood (optional)



Conversion table for pressure values:

Unit =	bar	mbar	Pa	kPa	mH_2O
1 Pa	0.00001 bar	0.01 mbar	1 Pa	0.001 kPa	0.000101971 mH_2O
1 kPa	0.01 bar	10 mbar	1000 Pa	1 kPa	0.101971 mH_2O
1 bar	1 bar	1000 mbar	100000 Pa	100 kPa	10.1971 mH_2O
1 mbar	0.001 bar	1 mbar	100 Pa	0.1 kPa	0.0101971 mH_2O
1 mH_2O	0.0980665 bar	98.0665 mbar	9806.65 Pa	9.80665 kPa	1 mH_2O

Pressure, differential pressure and volume flow measuring transducers, including connection set, compact form, adjustable, calibratable, with multi-range switching and active output

I variant with 2-wire connection

S+S REGELTECHNIK

Dimensional drawing **ASD-06** Connection set

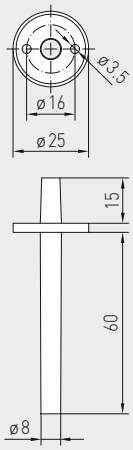

Dimensional drawing **ASD-07** Connection nipple

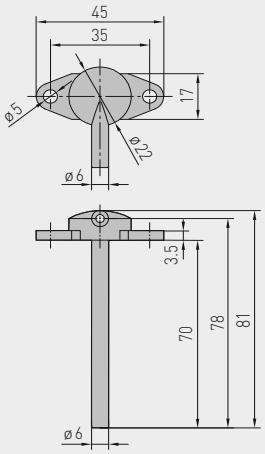

Dimensional drawing **DAL-01** Pressure outlet

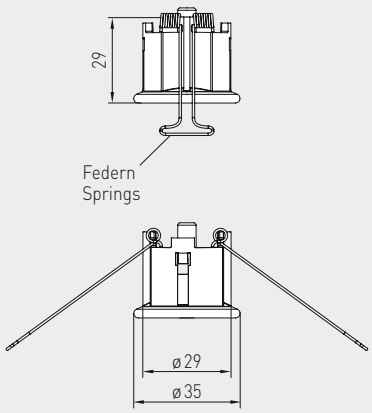

ASD-06 Connection set



ASD-07 Connection nipple



DAL-01 Pressure outlet



Accessories		Item No.
ASD-06	**Connection set (included in the scope of delivery),** consisting of 2 connection nipples (straight) made of ABS, 2 m PVC hose, soft, and 4 tapping screws	7100-0060-3000-000
ASD-07	**2 connection nipples** (at 90 degree angle) made of plastic, ABS	7100-0060-7000-000
DAL-01	**Pressure outlet** for ceiling or in-wall installation (e.g. in clean rooms)	7300-0060-3000-001
WS-04	**Weather and sun protection hood**, 130 x 180 x 135 mm, stainless steel **V2A** (1.4301)	7100-0040-7000-000
	For further information, see last chapter Accessories!	

PREMASGARD® **112x-SD**	Pressure, differential pressure and volume flow measuring transducers, *Standard* (Pressure connectors on the bottom side)		
Pressure range (Ranges adjustable)	**Type / WG01B**	**Output**	**Item No** (with snap-on lid)
max. – 1000...+ 1000 Pa	**PREM**ASGARD® **1121-SD**		**IP 43**
0... 100 Pa / – 100...+ 100 Pa 0... 300 Pa / – 300...+ 300 Pa 0... 500 Pa / – 500...+ 500 Pa 0... 1000 Pa / – 1000...+ 1000 Pa	PREMASGARD 1121-SD-I	4...20 mA	1301-1182-0010-000
max. – 5000...+ 5000 Pa	**PREM**ASGARD® **1125-SD**		**IP 43**
0...1000 Pa / – 1000...+ 1000 Pa 0...2000 Pa / – 2000...+ 2000 Pa 0...3000 Pa / – 3000...+ 3000 Pa 0...5000 Pa / – 5000...+ 5000 Pa	PREMASGARD 1125-SD-I	4...20 mA	1301-1182-0050-000
Further device types:	see **PREM**ASGARD® **212x-SD** (3-conductor connection)		
Multi-range switching:	The **pressure ranges** depend on the device type and can be set via DIP switches.		

Pressure, differential pressure and volume flow measuring transducers, including connection set, compact form, adjustable, calibratable, with multi-range switching and active output

PREMASGARD® **111x**
Pressure connectors
on the top side,
with/without display,
with quick-locking screws
(IP 65)

PREMASGARD® **112x**
Pressure connectors
on the bottom side,
with/without display,
with quick-locking screws
(IP 65)

PREMASGARD® **112x-SD**
Pressure connectors
on the bottom side,
without display,
with snap-on lid
(IP 43)



PREMASGARD® **111x**	Pressure, differential pressure and volume flow measuring transducers, *Premium* (Pressure connectors on the top side)			
Pressure range (Ranges adjustable)	**Type / WG01**	**Output**	**Display**	**Item No** (with quick-locking screws)
max. – 1000...+ 1000 Pa	**PREM**ASGARD® **1111**			**IP 65**
0... 100 Pa / – 100...+ 100 Pa 0... 300 Pa / – 300...+ 300 Pa 0... 500 Pa / – 500...+ 500 Pa 0... 1000 Pa / – 1000...+ 1000 Pa	PREMASGARD 1111-I	4...20 mA		1301-1112-0010-000
	PREMASGARD 1111-I LCD	4...20 mA	■	1301-1112-2010-000
	–	0-10 V		see **PREM**ASGARD® **211x**
max. – 5000...+ 5000 Pa	**PREM**ASGARD® **1115**			**IP 65**
0...1000 Pa / – 1000...+ 1000 Pa 0...2000 Pa / – 2000...+ 2000 Pa 0...3000 Pa / – 3000...+ 3000 Pa 0...5000 Pa / – 5000...+ 5000 Pa	PREMASGARD 1115-I	4...20 mA		1301-1112-0050-000
	PREMASGARD 1115-I LCD	4...20 mA	■	1301-1112-2050-000
	–	0-10 V		see **PREM**ASGARD® **211x**
max. – 10000...+ 10000 Pa	**PREM**ASGARD® **1116**			**IP 65**
0... 4000 Pa / – 4000...+ 4000 Pa 0... 6000 Pa / – 6000...+ 6000 Pa 0... 8000 Pa / – 8000...+ 8000 Pa 0...10000 Pa / – 10000...+ 10000 Pa	PREMASGARD 1116-U	0-10 V		1301-1111-0060-000
	PREMASGARD 1116-U LCD	0-10 V	■	1301-1111-2060-000
	PREMASGARD 1116-I	4...20 mA		1301-1112-0060-000
	PREMASGARD 1116-I LCD	4...20 mA	■	1301-1112-2060-000
Multi-range switching:	The **pressure ranges** depend on the device type and can be set via DIP switches.			

PREMASGARD® **112x**	Pressure, differential pressure and volume flow measuring transducers, *Premium* (Pressure connectors on the bottom side)			
Pressure range (Ranges adjustable)	**Type / WG01**	**Output**	**Display**	**Item No** (with quick-locking screws)
max. – 1000...+ 1000 Pa	**PREM**ASGARD® **1121**			**IP 65**
0... 100 Pa / – 100...+ 100 Pa 0... 300 Pa / – 300...+ 300 Pa 0... 500 Pa / – 500...+ 500 Pa 0... 1000 Pa / – 1000...+ 1000 Pa	PREMASGARD 1121-I	4...20 mA		1301-1172-0010-000
	PREMASGARD 1121-I LCD	4...20 mA	■	1301-1172-2010-000
	–	0-10 V		see **PREM**ASGARD® **212x**
max. – 5000...+ 5000 Pa	**PREM**ASGARD® **1125**			**IP 65**
0...1000 Pa / – 1000...+ 1000 Pa 0...2000 Pa / – 2000...+ 2000 Pa 0...3000 Pa / – 3000...+ 3000 Pa 0...5000 Pa / – 5000...+ 5000 Pa	PREMASGARD 1125-I	4...20 mA		1301-1172-0050-000
	PREMASGARD 1125-I LCD	4...20 mA	■	1301-1172-2050-000
	–	0-10 V		see **PREM**ASGARD® **211x**
max. – 10000...+ 10000 Pa	**PREM**ASGARD® **1126**			**IP 65**
0... 4000 Pa / – 4000...+ 4000 Pa 0... 6000 Pa / – 6000...+ 6000 Pa 0... 8000 Pa / – 8000...+ 8000 Pa 0...10000 Pa / – 10000...+ 10000 Pa	PREMASGARD 1126-U	0-10 V		1301-1171-0060-000
	PREMASGARD 1126-U LCD	0-10 V	■	1301-1171-2060-000
	PREMASGARD 1126-I	4...20 mA		1301-1172-0060-000
	PREMASGARD 1126-I LCD	4...20 mA	■	1301-1172-2060-000
Multi-range switching:	The **pressure ranges** depend on the device type and can be set via DIP switches.			

PREMASGARD® 711x

**Pressure and differential pressure measuring transducers,
including connection set, calibratable,
with multi-range switching and active output**

S+S REGELTECHNIK

The calibratable **PREM**ASGARD® **711x** pressure sensors (series) are equipped with eight switchable measuring ranges and equipped with optional display (eight devices in one) and are used to measure above-atmospheric, below-atmospheric, or differential pressures in air. The piezoresistive measuring element is temperature-compensated and guarantees a high degree of reliability and precision.
The pressure transmitters feature a pushbutton for manual zero point calibration or an automatic zero point calibration function as well as an adjustable offset.
Applications of these pressure sensors are in clean room, medical and filter technology, in ventilation and air conditioning ducts, in spray booths, in large-scale catering facilities, for monitoring filters, for level measurement or for triggering frequency converters. Media measured with these pressure transducers are clean air (non-precipitating), or other gaseous non-aggressive, non-combustible media. The differential pressure sensor is supplied including connection set **ASD-06** (2 m connection hose, two pressure connection nipples, screws).

PREMASGARD® **711x**





TECHNICAL DATA

Power supply:	24 V AC (±20 %); 15...36 V DC for U variant 15...36 V DC for I variant, depending on working resistance, residual ripple stabilised ±0.3 V
Working resistance:	R_a (ohm) = (U_b -14 V) / 0.02 A for I variant
Load resistance:	R_L > 5 kOhm for U variant
Power consumption:	< 2 VA / 24 V DC, < 3.5 VA / 24 V AC
Measuring ranges:	**multi-range switching** **with 8 switchable measuring ranges** (see table)
Output signal:	0 -10 V or 4...20 mA
Electrical connection:	2- or 3-wire connection
Media temperature:	–20...+50 °C
Pressure connection:	4 / 6 x 11 mm (hoses Ø = 4 / 6 mm), metal pressure connection nozzles
Type of pressure:	differential pressure
Medium:	clean air and non-aggressive, non-combustible gases
Accuracy:	**Type 7112** (25 Pa): typically ±1 Pa **Type 7110** (100 Pa): typically ±2 Pa **Type 7111** (1000 Pa): typically ±5 Pa **Type 7115** (5000 Pa): typically ±25 Pa compared to the calibrated reference device
Sum of Linearity+hysteresis:	< ±1 % of final value ±2 % of final value for pressure ranges < ±250 Pa
Temperature drift values:	±0.1 % / °C ±0.3 % / °C for pressure ranges < 250 Pa
Zero point offset:	< ±0.7 % of final value ±1.4 % of final value for pressure ranges < 250 Pa
Above- / below-atmospheric pressure:	max. ±100 hPa
Signal filtering:	**switchable 1 s / 10 s**
Enclosure:	plastic, UV-stabilised, material polyamide, 30 % glass-globe reinforced, with quick-locking screws (slotted / Phillips head combination), colour traffic white (similar to RAL 9016), enclosure cover for display is transparent!
Dimensions:	126 x 90 x 50 mm (Typ 2)
Electrical connection:	0.14 - 1.5 mm², via plug-in screw terminal
Cable gland:	M 16 x 1.5; including strain relief
Air humidity:	< 95 % r. H., non-precipitating air
Protection class:	III (according to EN 60 730)
Protection type:	IP 65 (according to EN 60 529)
Standards:	CE conformity according to EMC Directive 2014 / 30 / EU, according to EN 61326-1, according to EN 61326-2-3
Equipment:	three-line **display with illumination**, cutout approx. 70 x 40 mm (W x H), for displaying ACTUAL pressure and for adjusting the automatic zero point calibration
ACCESSORIES	
ASD-06	Connection set (nipple straight) – (included in the scope of delivery)
ASD-07	Connection nipple (at 90° angle)
DAL-01	Pressure outlet for ceiling or in-wall installation (e.g. in clean rooms)
WS-03	Weather and sun protection hood, 200 x 180 x 150 mm, stainless steel **V2A** (1.4301)

Display
Automatic zero point calibration



Standard
Actual pressure (in Pa)
Calibration interval (arrows)



Zero point calibration
Active
Calibration time (in seconds)



Adjustment of
zero point calibration
Cycle time (15 min to 24 hours)
adjustable by potentiometer

Pressure and differential pressure measuring transducers, including connection set, calibratable, with multi-range switching and active output

Dimensional drawing **PREMASGARD® 711x**

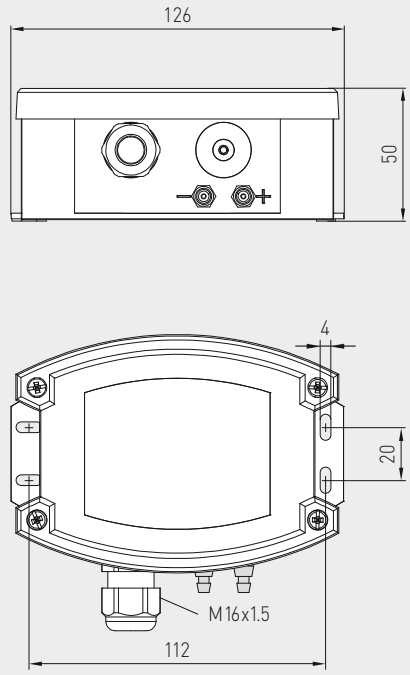

PREMASGARD® 711x
with display





Dimensional drawing **ASD-06**
Connection set

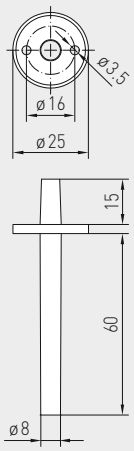

Dimensional drawing **ASD-07**
Connection nipple

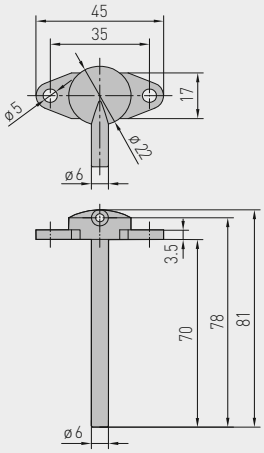

Dimensional drawing **DAL-01**
Pressure outlet

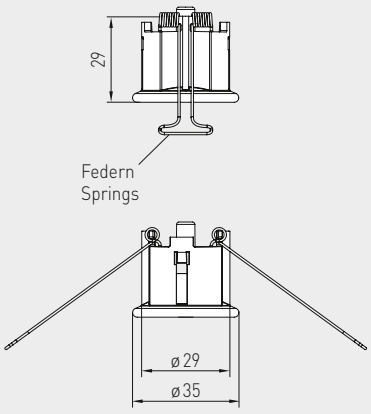

ASD-06
Connection set



ASD-07
Connection nipple



DAL-01
Pressure outlet



Pressure and differential pressure measuring transducers, including connection set, calibratable, with multi-range switching and active output

S+S REGELTECHNIK

Schematic diagram
Output:
0-10 V

PREMASGARD® 711x-U

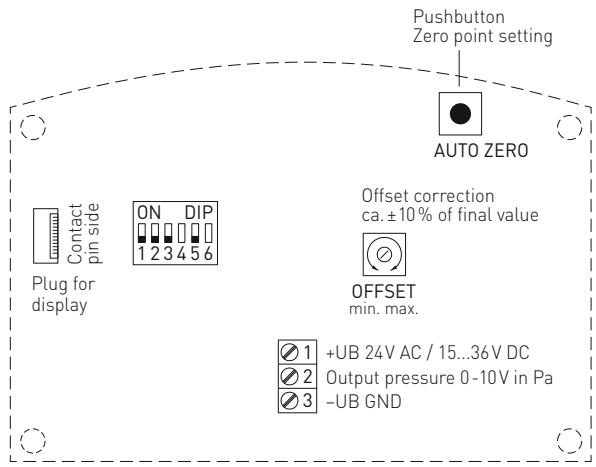

DIP switches 4 and 6 are not assigned!

Schematic diagram*
Output:
4...20 mA

PREMASGARD® 711x-I

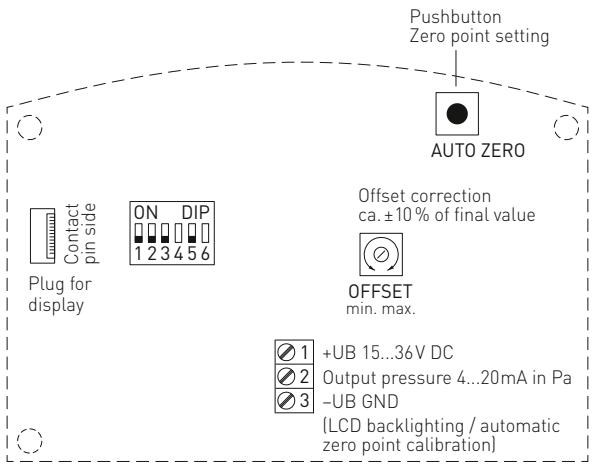

DIP switches 4 and 6 are not assigned!

Pressure range (selectable) – max. measuring range (default) is depending to the type of device								**DIP 1**	**DIP 2**
0...25 Pa	0...50 Pa	0...100 Pa	0...1000 Pa	–25...+25 Pa	–50...+50 Pa	–100...+100 Pa	–1000...+1000 Pa	OFF	OFF
–	–	0...300 Pa	0...2000 Pa	–	–	–300...+300 Pa	–2000...+2000 Pa	**ON**	OFF
–	–	0...500 Pa	0...3000 Pa	–	–	–500...+500 Pa	–3000...+3000 Pa	OFF	**ON**
0...25 Pa	**0...100 Pa**	**0...1000 Pa**	**0...5000 Pa**	**-25...+25 Pa**	**-100...+100 Pa**	**-1000...+1000 Pa**	**-5000...+5000 Pa**	**ON**	**ON**

PREMASGARD® 711x

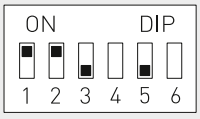

DIP switches 4 and 6 are not assigned!

Measuring range mode (Mode selectable)	**DIP 3**
Unidirectional (0...+MR) (default)	OFF
Bidirectional (–MR...+MR)	**ON**

Measurement signal filtering (Time interval selectable)	**DIP 5**
10 s (default)	OFF
1 s	**ON**

Mounting diagram

PREMASGARD® 711x

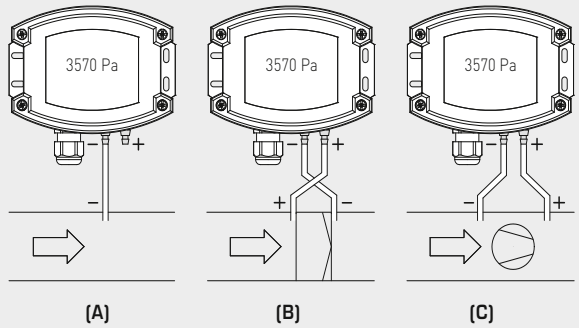

TYPES OF MONITORING:

(A) Below-atmospheric pressure:
P1 (+) is not connected
but open against atmosphere
P2 (–) connected to inside of duct

(B) Filter:
P1 (+) connected upstream of filter
P2 (–) connected downstream of filter

(C) Ventilator:
P1 (+) connected downstream of ventilator
P2 (–) connected upstream of ventilator

Pressure connections at the pressure switch are marked with P1 (+) for higher pressure and P2 (–) for lower pressure.

Conversion table for pressure values:

Unit =	bar	mbar	Pa	kPa	mH_2O
1 Pa	0.00001 bar	0.01 mbar	1 Pa	0.001 kPa	0.000101971 mH_2O
1 kPa	0.01 bar	10 mbar	1000 Pa	1 kPa	0.101971 mH_2O
1 bar	1 bar	1000 mbar	100000 Pa	100 kPa	10.1971 mH_2O
1 mbar	0.001 bar	1 mbar	100 Pa	0.1 kPa	0.0101971 mH_2O
1 mH_2O	0.0980665 bar	98.0665 mbar	9806.65 Pa	9.80665 kPa	1 mH_2O

Pressure and differential pressure measuring transducers, including connection set, calibratable, with multi-range switching and active output

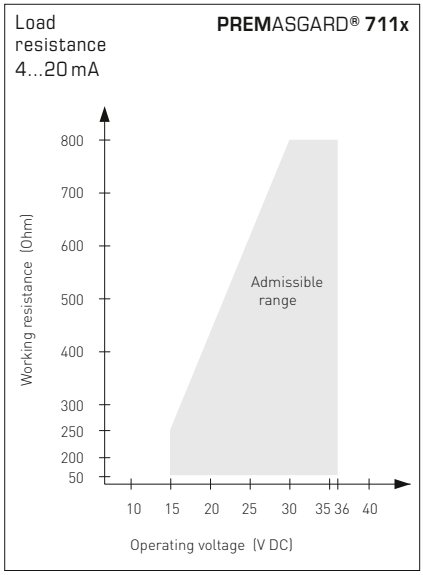



PREMASGARD® 711x with display

PREMASGARD® 711x	Pressure and differential pressure measuring transducers, *Deluxe*			
Pressure range (adjustable)	**Type / WG02**	**Output**	**Display**	**Item No.**
max. – 1000...+ 1000 Pa	**PREMASGARD® 7111**			
0... 100 Pa / – 100... + 100 Pa 0... 300 Pa / – 300... + 300 Pa 0... 500 Pa / – 500... + 500 Pa 0... 1000 Pa / –1000... + 1000 Pa	PREMASGARD 7111-U	0-10 V		1301-7111-0010-200
	PREMASGARD 7111-U LCD	0-10 V	■	1301-7111-4010-200
	PREMASGARD 7111-I	4...20 mA		1301-7112-0010-100
	PREMASGARD 7111-I LCD	4...20 mA	■	1301-7112-4010-100
max. – 5000...+ 5000 Pa	**PREMASGARD® 7115**			
0...1000 Pa / – 1000 ... + 1000 Pa 0...2000 Pa / – 2000 ... + 2000 Pa 0...3000 Pa / – 3000 ... + 3000 Pa 0...5000 Pa / – 5000 ... + 5000 Pa	PREMASGARD 7115-U	0-10 V		1301-7111-0050-200
	PREMASGARD 7115-U LCD	0-10 V	■	1301-7111-4050-200
	PREMASGARD 7115-I	4...20 mA		1301-7112-0050-100
	PREMASGARD 7115-I LCD	4...20 mA	■	1301-7112-4050-100
max. –100...+100 Pa	**PREMASGARD® 7110**			
0... +50 Pa / –50... +50 Pa 0...+100 Pa /–100...+100 Pa	PREMASGARD 7110-U	0-10 V		1301-7111-0110-200
	PREMASGARD 7110-U LCD	0-10 V	■	1301-7111-4110-200
	PREMASGARD 7110-I	4...20 mA		1301-7112-0110-100
	PREMASGARD 7110-I LCD	4...20 mA	■	1301-7112-4110-100
max. –25...+25 Pa	**PREMASGARD® 7112**			
0... +25 Pa / –25... +25 Pa	PREMASGARD 7112-U	0-10 V		1301-7111-0370-200
	PREMASGARD 7112-U LCD	0-10 V	■	1301-7111-4370-200
	PREMASGARD 7112-I	4...20 mA		1301-7112-0370-200
	PREMASGARD 7112-I LCD	4...20 mA	■	1301-7112-4370-200
	Equipped as standard with automatic zero point calibration (3-wire connection)			
Multi-range switching:	The **pressure ranges** depend on the device type and can be set via DIP switches.			
Extra charge:	Other special measuring ranges up to max. 5000 Pa **with optional automatic zero point calibration** (please specify in your order)			

Accessories		
ASD-06	**Connection set (included in the scope of delivery),** consisting of 2 connection nipples (straight) made of ABS, 2 m PVC hose, soft, and 4 tapping screws	7100-0060-3000-000
ASD-07	**2 connection nipples** (at 90 degree angle) made of plastic, ABS	7100-0060-7000-000
DAL-01	**Pressure outlet** for ceiling or in-wall installation (e.g. in clean rooms)	7300-0060-3000-001
WS-03	**Weather and sun protection hood**, 200 x 180 x 150 mm, stainless steel **V2A** (1.4301)	7100-0040-6000-000
	For further information, see last chapter Accessories!	

PREMASREG® 711x

Pressure and differential pressure measuring transducers/switches, incl. connection set, with multi-range switching and adjustable, switching and active output

S+S REGELTECHNIK

The electronic **PREM**ASREG® **711x** pressure sensors and switches are equipped with eight switchable measuring ranges, one switching output and one continuous output, and a display for setting the switchpoint and to display the ACTUAL pressure (eight devices in one, plus differential pressure switch / differential pressure monitor, continuous pressure sensor in a single device). The pressure sensor is used for above-atmospheric, below-atmospheric, or differential pressure measurement in clean air with limit value switching. The piezo-resistive measuring element guarantees a high degree of reliability and accuracy. Applications of these pressure sensors are in clean room, medical and filter technology, in ventilation and air conditioning ducts, in spray booths, in large-scale catering facilities, for monitoring filters, for level measurement or for triggering frequency converters. Media measured with these pressure transducers are air (non-precipitating), or other gaseous non-aggressive, non-combustible media. The pressure sensor has a manual zero point pushbutton and an offset potentiometer for final value and switchpoint correction. Fine adjustment by the user is possible at any time. The delivery includes the connection set **ASD-06** (2 m connection hose, two pressure connection nipples, screws).

TECHNICAL DATA

Voltage supply:	24 V AC / DC (± 20 %)
Load resistance:	R_L > 5 kOhm
Power consumption:	< 1 VA / 24 V DC, < 2.2 VA / 24 V AC
Measuring ranges:	**multi-range switching** **with 8 switchable measuring ranges** (see table)
Output signal:	0 -10 V 1 changeover contact (24 V), 1 A ohmic load
Electrical connection:	3-wire connection (U)
Media temperature:	–20...+50 °C
Pressure connection:	4 / 6 x 11 mm (hoses Ø = 4 / 6 mm), metal pressure connection nozzles
Type of pressure:	differential pressure
Medium:	clean air and non-aggressive, non-combustible gases
Accuracy:	**Type 7111** (1000 Pa): typically ± 5 Pa **Type 7115** (5000 Pa): typically ± 25 Pa compared to the calibrated reference device
Sum of Linearity+hysteresis:	< ± 1 % of final value
Temp. drift values:	± 0.1 % / °C
Zero point offset:	< ± 0.7 % of final value
Above- / below-atmospheric pressure:	max. ± 100 hPa
Signal filtering:	**switchable 1 s / 10 s**
Setting increment Δp:	1 % of pressure range (100 Pa => 1 Pa; 5000 Pa => 50 Pa)
Switching hysteresis:	± 1 % of pressure range (100 Pa => ± 1 Pa; 5000 Pa => ± 50 Pa)
Enclosure:	plastic, UV-stabilised, material polyamide, 30 % glass-globe reinforced, with quick-locking screws (slotted / Phillips head combination), colour traffic white (similar to RAL 9016), enclosure cover for display is transparent!
Dimensions:	126 x 90 x 50 mm (Tyr 2)
Electrical connection:	0.14 - 1.5 mm², via plug-in screw terminal
Cable gland:	M 16 x 1.5; including strain relief
Air humidity:	< 95 % r. H., non-precipitating air
Protection class:	III (according to EN 60 730)
Protection type:	IP 65 (according to EN 60 529)
Standards:	CE conformity according to EMC Directive 2014 / 30 / EU, according to EN 61326-1, according to EN 61326-2-3
Equipment:	three-line **display with illumination**, cutout approx. 70 x 40 mm (W x H), for displaying ACTUAL pressure and /or SETPOINT pressure and for adjusting the automatic zero point calibration
ACCESSORIES	
ASD-06	Connection set (nipple straight) – (included in the scope of delivery)
ASD-07	Connection nipple (at 90° angle)
DAL-01	Pressure outlet for ceiling or in-wall installation (e.g. in clean rooms)
WS-03	Weather and sun protection hood, 200 x 180 x 150 mm, stainless steel **V2A** (1.4301)

Display
Automatic zero point calibration



Standard
Actual pressure (in Pa)
Calibration interval (arrows)



Zero point calibration
Active
Calibration time (in seconds)



Adjustment of zero point calibration
Cycle time (15 min to 24 hours) adjustable by potentiometer

Pressure and differential pressure measuring transducers/switches, incl. connection set, with multi-range switching and adjustable, switching and active output

Dimensional drawing **PREMASREG® 711x**

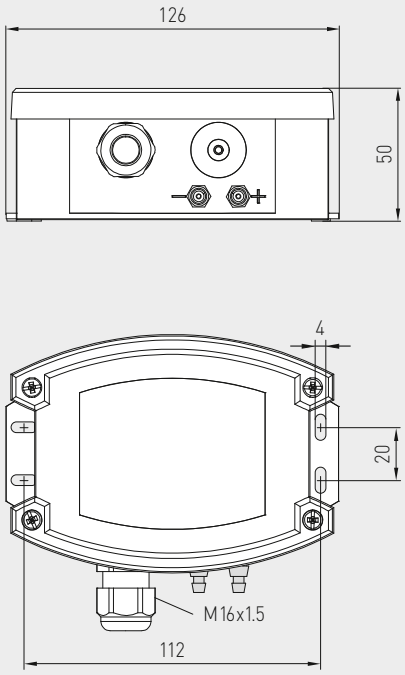

PREMASREG® 711x
with display





Dimensional drawing **ASD-06**
Connection set

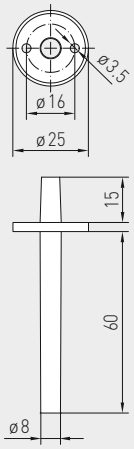

Dimensional drawing **ASD-07**
Connection nipple

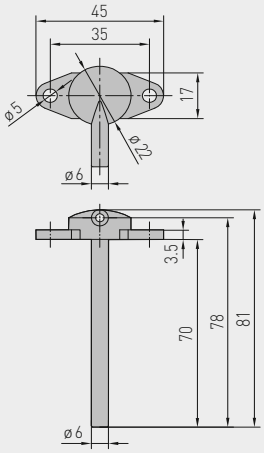

Dimensional drawing **DAL-01**
Pressure outlet

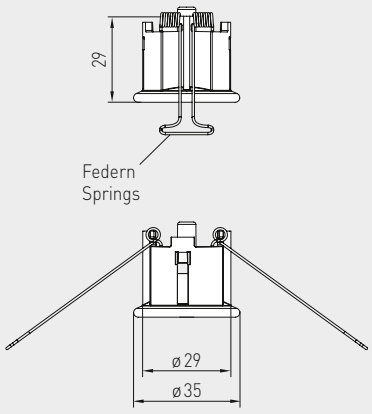

ASD-06
Connection set



ASD-07
Connection nipple



DAL-01
Pressure outlet



Pressure and differential pressure measuring transducers/switches, incl. connection set, with multi-range switching and adjustable, switching and active output

S+S REGELTECHNIK

Schematic diagram
Output:
0-10 V

PREMASREG® 711x-U/W

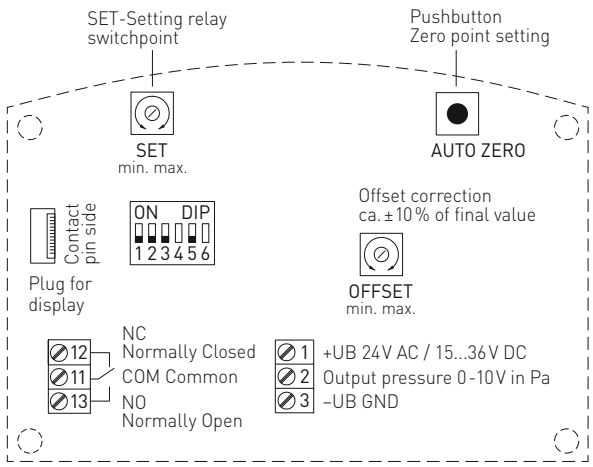

DIP switches 4 and 6 are not assigned!

Pressure range (selectable) – max. measuring range (default) is depending to the type of device				**DIP 1**	**DIP 2**
0...100 Pa	0...1000 Pa	–100...+100 Pa	–1000...+1000 Pa	OFF	OFF
0...300 Pa	0...2000 Pa	–300...+300 Pa	–2000...+2000 Pa	**ON**	OFF
0...500 Pa	0...3000 Pa	–500...+500 Pa	–3000...+3000 Pa	OFF	**ON**
0...1000 Pa	**0...5000 Pa**	**-1000...+1000 Pa**	**-5000...+5000 Pa**	**ON**	**ON**

PREMASREG® 711x

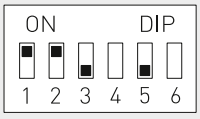

DIP switches 4 and 6 are not assigned!

Measuring range mode (Mode selectable)	**DIP 3**
Unidirectional (0...+MR) (default)	OFF
Bidirectional (–MR...+MR)	**ON**

Measurement signal filtering (Time interval selectable)	**DIP 5**
10 s (default)	OFF
1 s	**ON**

Mounting diagram

PREMASREG® 711x

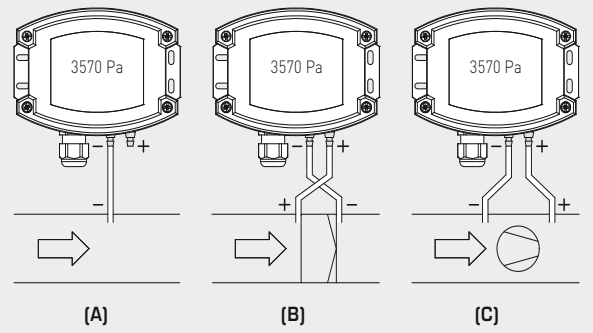

TYPES OF MONITORING:

(A) Below-atmospheric pressure:
P1 (+) is not connected
but open against atmosphere
P2 (–) connected to inside of duct

(B) Filter:
P1 (+) connected upstream of filter
P2 (–) connected downstream of filter

(C) Ventilator:
P1 (+) connected downstream of ventilator
P2 (–) connected upstream of ventilator

Pressure connections at the pressure switch are marked with
P1 (+) for higher pressure and
P2 (–) for lower pressure.

Conversion table for pressure values:

Unit =	bar	mbar	Pa	kPa	mH_2O
1 Pa	0.00001 bar	0.01 mbar	1 Pa	0.001 kPa	0.000101971 mH_2O
1 kPa	0.01 bar	10 mbar	1000 Pa	1 kPa	0.101971 mH_2O
1 bar	1 bar	1000 mbar	100000 Pa	100 kPa	10.1971 mH_2O
1 mbar	0.001 bar	1 mbar	100 Pa	0.1 kPa	0.0101971 mH_2O
1 mH_2O	0.0980665 bar	98.0665 mbar	9806.65 Pa	9.80665 kPa	1 mH_2O

Pressure and differential pressure measuring transducers/switches, incl. connection set, with multi-range switching and adjustable, switching and active output

WS-03
Weather and sun protection hood (optional)



PREMASREG® **711x**
with display



PREMASREG® **711x**	Pressure and differential pressure measuring transducers/switches, *Deluxe*			
Pressure range (adjustable)	**Type / WG02**	**Output**	**Display**	**Item No.**
max. – 1000...+ 1000 Pa	**PREM**ASREG® **7111**			
0... 100 Pa / – 100... + 100 Pa 0... 300 Pa / – 300... + 300 Pa 0... 500 Pa / – 500... + 500 Pa 0... 1000 Pa / – 1000... + 1000 Pa	PREMASREG 7111-U/W LCD	0-10 V 1x Changeover contact	■	1302-7111-4011-200
max. – 5000...+ 5000 Pa	**PREM**ASREG® **7115**			
0... 1000 Pa / – 1000 ... + 1000 Pa 0...2000 Pa / – 2000 ... + 2000 Pa 0...3000 Pa / – 3000 ... + 3000 Pa 0...5000 Pa / – 5000 ... + 5000 Pa	PREMASREG 7115-U/W LCD	0-10 V 1x Changeover contact	■	1302-7111-4051-200
Multi-range switching:	The **pressure ranges** depend on the device type and can be set via DIP switches.			
Extra charge:	Other special measuring ranges up to max. 5000 Pa **with optional automatic zero point calibration** (please specify in your order)			

Accessories		
ASD-06	**Connection set (included in the scope of delivery),** consisting of 2 connection nipples (straight) made of ABS, 2 m PVC hose, soft, and 4 tapping screws	7100-0060-3000-000
ASD-07	**2 connection nipples** (at 90 degree angle) made of plastic, ABS	7100-0060-7000-000
DAL-01	**Pressure outlet** for ceiling or in-wall installation (e.g. in clean rooms)	7300-0060-3000-001
WS-03	**Weather and sun protection hood**, 200 x 180 x 150 mm, stainless steel **V2A** (1.4301)	7100-0040-6000-000
	For further information, see last chapter Accessories!	

PREMASREG® 716x

Pressure measuring transducer / switch / control switch for volume flow, differential pressure, filter monitoring and liquid level detection, incl. connection set

S+S REGELTECHNIK

The electronic pressure sensor and switch **PREM**ASREG® **716x** is equipped with measuring functions for volume flow, differential pressure, filter monitoring and liquid level detection based on pressure measurement in clean air. The devices are fitted with one switching output, one continuous output and one backlit display for setting the switchpoint and displaying the ACTUAL values.
The piezo-resistive measuring element guarantees a high degree of reliability and accuracy.
This pressure sensor is used in clean room, medical and filter technology, in ventilation and air conditioning ducts, in spray booths, in large-scale catering facilities, for monitoring filters, for level measurement or for triggering frequency converters. The medium measured is air (non-precipitating), or other gaseous non-aggressive, non-combustible media. It has a manual zero point pushbutton and an offset potentiometer for final value correction. Fine adjustment by the user is possible at any time. Parameter entry is menu-based and is easy to perform using three buttons with the help of the display. A connection set **ASD-06** (2m connection hose, two pressure nipples, screws) is included in the scope of supply.

TECHNICAL DATA

Power supply:	24 V AC / DC (± 10 %) and 15...36 V DC
Load resistance:	R_L > 5 kOhm
Power consumption:	< 1.5 VA / 24 V DC, < 2.8 VA / 24 V AC
Measuring function:	**Volume flow, differential pressure, filter monitoring, fill level** (adjustable)
Measuring ranges:	**10...100%** (adjustable)
Output signal:	0-10 V 1 changeover contact (24 V), 1 A ohmic load
Electrical connection:	3-wire connection
Media temperature:	–20...+50 °C
Pressure connection:	4 / 6 x 11 mm (hoses Ø = 4 / 6 mm), metal pressure connection nozzles
Type of pressure:	differential pressure
Medium:	clean air and non-aggressive, non-combustible gases
Accuracy:	**Type 7161** (1000 Pa): typically ± 5 Pa **Type 7165** (5000 Pa): typically ± 25 Pa compared to the calibrated reference device
Sum of Linearity+hysteresis:	< ± 1 % of final value (pressure)
Temp. drift values:	± 0.1 % / °C
Above- / below-atmospheric pressure:	max. ± 10000 Pa
Signal filtering:	**switchable 1 s / 10 s** and small value suppression < 1 %
Signal hysteresis:	± 1 % or final value (pressure) 10 Pa / 50 Pa
Enclosure:	plastic, UV-stabilised, material polyamide, 30 % glass-globe reinforced, with quick-locking screws (slotted / Phillips head combination), colour traffic white (similar to RAL 9016), enclosure cover for display is transparent!
Dimensions:	126 x 90 x 50 mm (Tyr 2)
Electrical connection:	0.14 - 1.5 mm², via plug-in screw terminal
Cable gland:	M 16 x 1.5; including strain relief
Air humidity:	< 95 % r. H., non-precipitating air
Protection class:	III (according to EN 60 730)
Protection type:	IP 65 (according to EN 60 529)
Standards:	CE conformity according to EMC Directive 2014 / 30 / EU, according to EN 61326-1, according to EN 61326-2-3
Equipment:	**Display with illumination,** three-line, cutout approx. 70 x 40 mm (W x H), for displaying the **volume flow, differential pressure, contamination degree** or **level** and for setting the **switchpoint, K factor, measuring range limits** and other settings
K factor:	**1 to 3000** (adjustable)
Units:	**m³/s, m³/min, m³/h, l/s, l/min, l/h, %, cm** (adjustable)
Max. value displayed:	999999
ACCESSORIES	
ASD-06	Connection set (nipple straight) – (included in the scope of delivery)
ASD-07	Connection nipple (at 90° angle)
WS-03	Weather and sun protection hood, 200 x 180 x 150 mm, stainless steel **V2A** (1.4301)

PREMASREG® **716x**
Function types



Volume flow rate

$$V = k \cdot \sqrt{\Delta p}$$

V = Volume flow in m³/h
k = K factor 1...3000
Δp = Differential pressure in Pa



Differential pressure

$$\Delta p = p_+ - p_-$$

Δp = Differential pressure in Pa
p_+ = higher pressure
p_- = lower pressure



Filter contamination

$$S = 100\% \cdot \Delta p \div p_{Filter}$$

S = Contamination degree in %
Δp = Differential pressure in Pa
p_{Filter} = differential pressure filter replacement in Pa



Level display

$$h = \Delta p \div (\rho \cdot g)$$

h = Fill level height in cm
Δp = Differential pressure in Pa
ρ = Density 700...1300 in kg/m³
g = 9.81 m/s²

Pressure measuring transducer / switch/control switch for volume flow, differential pressure, filter monitoring and liquid level detection, incl. connection set

Dimensional drawing **PREMASREG® 716x**

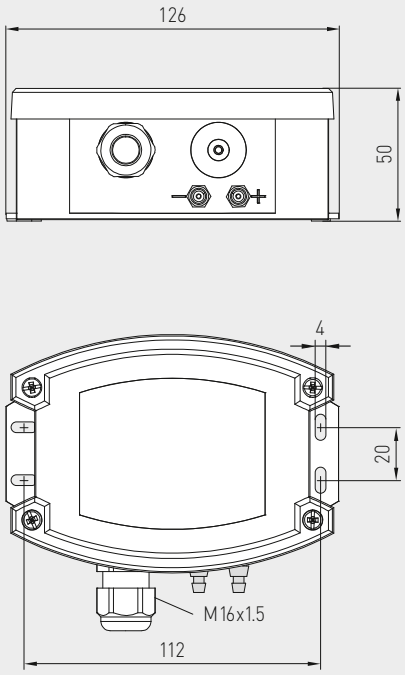

PREMASREG® 716x
with display





Dimensional drawing **ASD-06**
Connection set

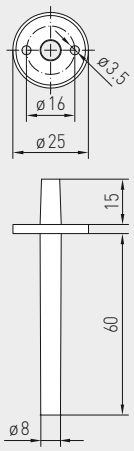

Dimensional drawing **ASD-07**
Connection nipple

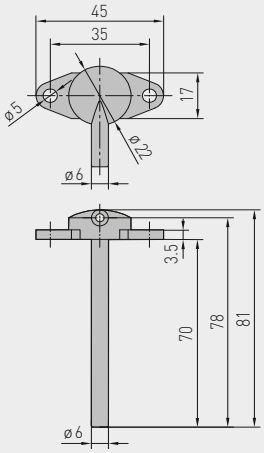

ASD-06
Connection set



ASD-07
Connection nipple



Pressure measuring transducer / switch/control switch for volume flow, differential pressure, filter monitoring and liquid level detection, incl. connection set

S+S REGELTECHNIK

Schematic diagram
Output:
0-10 V

PREMASREG® **761x-U/W**

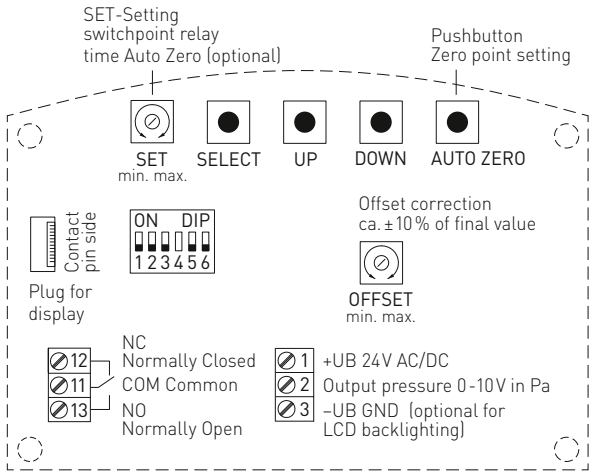

DIP switch 4 is not assigned!

PREMASREG® **716x**

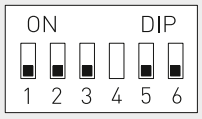

DIP switch 4
is not assigned!

Measuring range mode (Mode selectable)	**DIP 1**
Unidirectional (0 ...+MR) (default)	OFF
Bidirectional (–MR ...+MR)	**ON**

Small value suppression (measured values < 1% of end value (pressure) = 0)	**DIP 2**
Deactivated (default)	OFF
Active	**ON**

Relay (Function adjustable)	**DIP 3**
Deactivated (default)	OFF
Active (display shows switching point)	**ON**

Measurement signal filtering (Time interval selectable)	**DIP 5**
10 s (default)	OFF
1 s	**ON**

Service mode (display adjustable)	**DIP 6**
Standard (according to configuration) (default)	OFF
Service (differential pressure in Pa)	**ON**

Mounting diagram

PREMASREG® **716x**

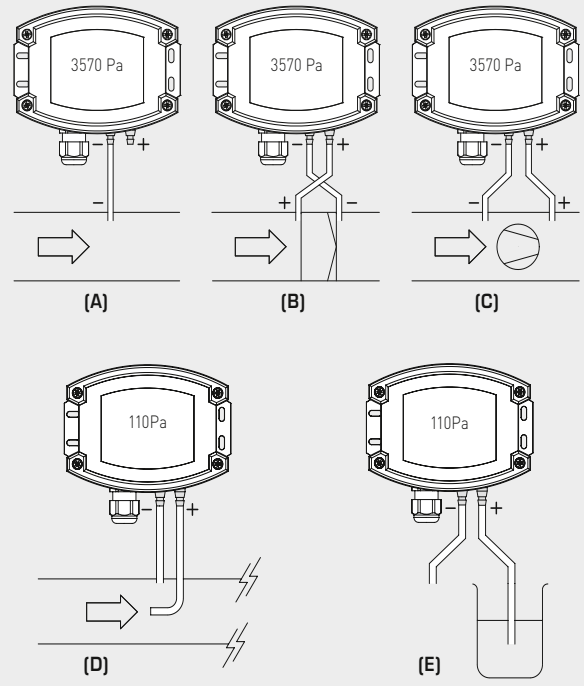

TYPES OF MONITORING:

(A) Below-atmospheric pressure:
P1 (+) is not connected,
but open to the atmosphere
P2 (–) connected to inside of duct

(B) Filter:
P1 (+) connected upstream of filter
P2 (–) connected downstream of filter

(C) Ventilator:
P1 (+) connected downstream of ventilator
P2 (–) connected upstream of ventilator

(D) Volume flow:
P1 (+) dynamic pressure,
Connected in flow direction
P2 (–) static pressure,
Connected free of dynamic pressure components

(E) Level:
P1 (+) Connection submerged in medium
P2 (–) Connection is open to the atmosphere

Pressure connections at the pressure switch are marked with
P1 (+) for higher pressure and
P2 (–) for lower pressure.

Pressure measuring transducer / switch/control switch for volume flow, differential pressure, filter monitoring and liquid level detection, incl. connection set

WS-03
Weather and sun protection hood (optional)



PREMASREG® 716x
with display



PREMASREG® 716x		Pressure measuring transducer/control switches for volume flow, differential pressure, filter monitoring and liquid level detection, *Deluxe*			
Measuring Range Pressure / Volume Flow		**Type / WG02**	**Output**	**Display**	**Item No.**
0 ...1000 Pa		**PREMASREG® 7161**			
k = 3000	**94800 m³ / h**	PREMASREG 7161-U/W LCD	0-10 V 1x Changeover contact	■	1302-7161-4161-200
0 ...5000 Pa		**PREMASREG® 7165**			
k = 3000	**212100 m³ / h**	PREMASREG 7165-U/W LCD	0-10 V 1x Changeover contact	■	1302-7161-4171-200

Accessories		
ASD-06	**Connection set (included in the scope of delivery),** consisting of 2 connection nipples (straight) made of ABS, 2 m PVC hose, soft, and 4 tapping screws	7100-0060-3000-000
ASD-07	**2 connection nipples** (at 90 degree angle) made of plastic, ABS	7100-0060-7000-000
WS-03	**Weather and sun protection hood**, 200 x 180 x 150 mm, stainless steel **V2A** (1.4301)	7100-0040-6000-000
	For further information, see last chapter Accessories!	

Measuring transducers for atmospheric pressure calibratable, with active output

S+S REGELTECHNIK

ALD

PREMASGARD® **ALD** measures the atmospheric pressure within a range of 850 - 1150 mbar and converts it into a standard signal of 0-10 V or 4...20 mA respectively. The sensor system is designed for measurements in clean air and other non-aggressive, non-condensing gaseous media. Areas of application for this pressure sensor include ventilation and air conditioning technology, air-pressure-dependent control systems, meteorological measurement stations and climate observation units. The pressure sensor excels thanks to its high accuracy, long-term stability and reliability. A variant with an additional display for pressure reading is available.



TECHNICAL DATA

Power supply:	5 ... 36 V DC for I variant 24 V AC (half-wave rectification) for U variant
Output signal:	0 - 10 V or 4...20 mA
Current consumption:	max. 20 mA (at 24 V DC)
Electrical connection:	2- or 3-wire connection
Medium:	clean air and other non-aggressive, non-combustible gases
Type of pressure:	atmospheric pressure / absolute pressure
Measuring range:	850 - 1150 mbar / 750 - 1250 mbar (selectable via DIP switches)
Max. pressure:	2000 mbar
Accuracy:	typically ± 1.5 % of final value at +20°C
Long-term stability:	± 0.5 % of final value per year
Linearity:	± 0.5 % of final value
Temperature drift values:	± 0.5 % of final value per 10 K
Hysteresis:	± 0.1 % of final value
Ambient temperature:	– 10...+ 50 °C
Operating range:	10 ... 95 % r.H.
Storage temperature:	–20...+ 50 °C
Turn-on time:	< 1 min
Signal filtering:	**0 s / 1 s / 5 s / 10 s** (selectable via DIP switches)
Enclosure:	plastic, UV-stabilised, material polyamide, 30 % glass-globe reinforced, with quick-locking screws (slotted / Phillips head combination), colour traffic white (similar to RAL 9016), enclosure cover for display is transparent!
Enclosure dimensions:	72 x 64 x 37.8 mm (Tyr 1 without display) 72 x 64 x 43.3 mm (Tyr 1 with display)
Cable gland:	M 16 x 1.5; including strain relief, exchangeable, max. inner diameter 10.4 mm
Electrical connection:	0.14 - 1.5 mm², via terminal screws
Humidity:	< 95 % r.H., non-precipitating air
Protection class:	III (according to EN 60 730)
Protection type:	IP 65 (according to EN 60 529)
Standards:	CE conformity, electromagnetic compatibility according to EN 61 326, EMC directive 2014 / 30 / EU
Features:	illuminated single line **display**, cutout 36 x 15 mm (W x H) indicating atmospheric pressure / absolute pressure

DIP switch block [A] for measuring range selection:

Measuring range (Measuring range selectable)	**DIP [A]**	
	DIP 1	**DIP 2**
750 - 1250 mbar	OFF	OFF
850 - 1150 mbar	**ON**	OFF

DIP switch block [B] for selecting output attenuation and zero balancing:

Measurement signal filtering (Time interval selectable)	**DIP [B]**	
	DIP 3	**DIP 4**
0 s	OFF	OFF
1 s	**ON**	OFF
5 s	OFF	**ON**
10 s	**ON**	**ON**

Conversion table for pressure values:

Unit =	bar	mbar	Pa	kPa	mH_2O
1 Pa	0.00001 bar	0.01 mbar	1 Pa	0.001 kPa	0.000101971 mH_2O
1 kPa	0.01 bar	10 mbar	1000 Pa	1 kPa	0.101971 mH_2O
1 bar	1 bar	1000 mbar	100000 Pa	100 kPa	10.1971 mH_2O
1 mbar	0.001 bar	1 mbar	100 Pa	0.1 kPa	0.0101971 mH_2O
1 mH_2O	0.0980665 bar	98.0665 mbar	9806.65 Pa	9.80665 kPa	1 mH_2O

Dimensional drawing **ALD**

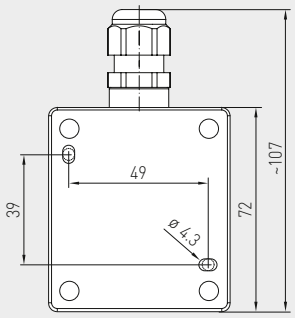

without display

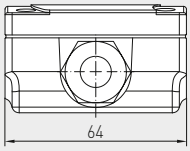

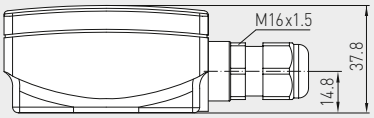

with display

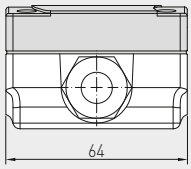

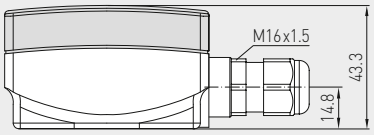

ALD
with display



Schematic diagram **ALD-I**

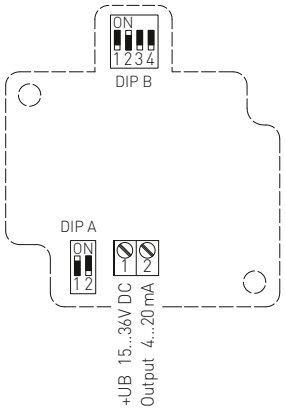

Schematic diagram **ALD-I-Display**

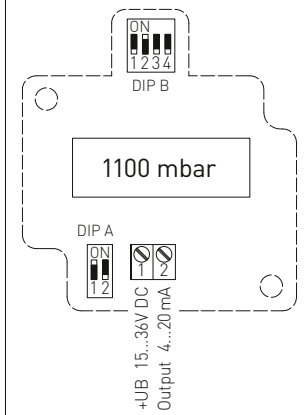

Schematic diagram **ALD-U**

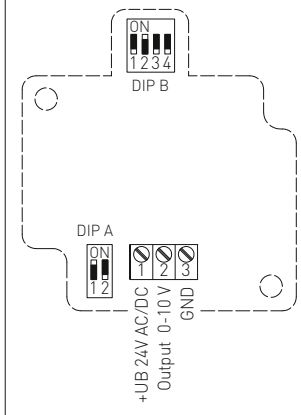

Schematic diagram **ALD-U-Display**

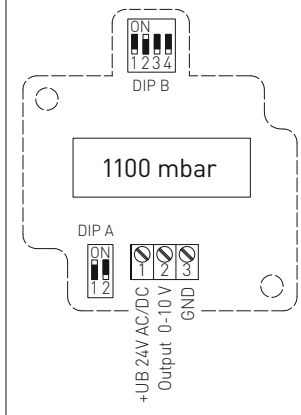

PREMASGARD® **ALD**	Measuring transducers for atmospheric pressure			
Type / WG01	**Measuring Range** (adjustable)	**Output**	**Display**	**Item No.**
ALD-I				**I-variant**
ALD-I	850 - 1150 mbar / 750 - 1250 mbar	4...20 mA		1301-1152-0080-100
ALD-I DISPLAY	850 - 1150 mbar / 750 - 1250 mbar	4...20 mA	■	1301-1152-1080-100
ALD-U				**U-variant**
ALD-U	850 - 1150 mbar / 750 - 1250 mbar	0 - 10 V		1301-1151-0080-100
ALD-U DISPLAY	850 - 1150 mbar / 750 - 1250 mbar	0 - 10 V	■	1301-1151-1080-100

Differential pressure switches for air, with mounting angle, incl. connection set

S+S REGELTECHNIK

The mechanical differential pressure switch / differential pressure monitor **PREM**ASREG® **DS 1** with metal angle is used for monitoring above-atmospheric, differential, and below-atmospheric pressures of air and gaseous, non-aggressive media in air ducts, ventilation intake or exhaust devices, as a flow monitor, as a pressure difference detector or pressure monitor for flow detection at electric heating registers, for monitoring V-belts and filters, as air pressure deficiency protection, for monitoring fans and air dampers, or as a limit value controller. The switchpoint is adjusted using the internal precision scale.

These instruments are factory-calibrated. The differential pressure DS 1 switch is supplied including connection set **ASD-06** (2 m connection hose, two pressure connection nipples, screws) and mounting angle **DS1-MW-Z**.

DS 1
with mounting angle



TECHNICAL DATA

Switching capacity: (Contact load)	5 (0.8) A, 250 V AC 4 (0.7) A, 30 V DC
Contact:	single-pole potential-free changeover contact, multi-layer contact, gold-plated (DDC compatible)
Pressure range:	see table, high adjustment accuracy due to individual laser-etched scale for each switch
Enclosure:	base: material PC (10 % GF), colour light grey (similar to RAL 7035), snap-on lid: material PC, transparent, cable gland PG 11 with strain relief
Temperature of medium:	–30...+85 °C
Membrane:	silicone, LSR (Liquid Silicon Rubber, tempered at +200 °C, non-outgassing, LABS-free, no emission of varnish-adhesion inhibiting substances), long-term stability of switching points due to trapezoidal bead membranes
Humidity:	< 90 % r. H., non-precipitating air
Electrical connection:	0.14 - 1.5 mm², via terminal screws with torsion protection
Pressure connection:	P1 (+) for higher pressure P2 (–) for lower pressure Ø 6.2 mm (nipples)
Mounting:	**with metal angle DS 1-MW-Z** (included in the scope of delivery) (for other optional shapes, see table) Recommended mounting position: vertical (pressure connections downward) – factory setting; horizontal (cap up / down)
Protection class:	II (according to EN 60 730)
Protection type:	IP 54 with top cover (according to EN 60529)
Standards:	CE conformity, low-voltage directive 2014 / 35 / EU
Tests:	DVGW (according to DIN 1854), VDE 0630, EN 61058, directive on gas devices 2009 / 142 / EU, CE 0085 A P 0918
FUNCTION	Contact 1-2 breaks when pressure / differential pressure rises to the preset value. Contact 1-3 closes when pressure / differential pressure drops and can be used as signal contact.
ACCESSORIES	
ASD-06	Connection set (nipple straight) – (included in the scope of delivery)
DS1-MW-Z	Mounting angle (included in the scope of delivery)
DS1-MW-U	Mounting angle (optional), combination bracket for vertical or horizontal mounting
WS-04	Weather and sun protection hood, 130 x 180 x 135 mm, aus stainless steel **V2A** (1.4301)

Dimensional drawing **DS 1**

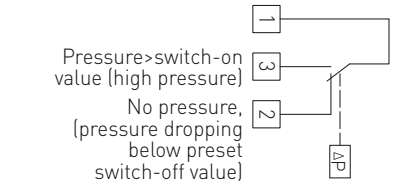

Dimensional drawing **DS 1**
with mounting angle
DS 1-MW-Z

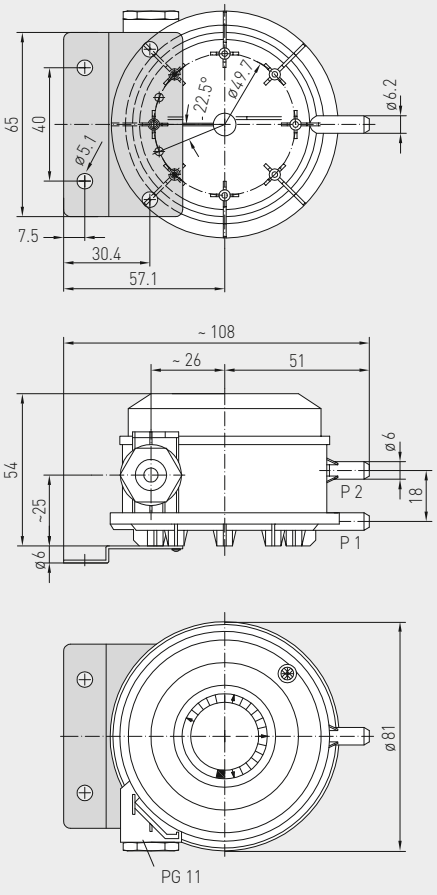

Differential pressure switches for air, with mounting ring, including connection set

The mechanical differential pressure switch / differential pressure monitor **PREM**ASREG® **DS-2** with 4-hole plastic base ring is used for monitoring above-atmospheric, differential and below-atmospheric pressures of clean air and other gaseous, non-aggressive non-combustible media in air ducts, air intake or exhaust devices, as a pressure difference detector or pressure monitor for flow detection at electric heating registers, for monitoring V-belts and filters, as air pressure deficiency protection, for monitoring fans and air dampers, or as a limit value controller. The switchpoint is adjusted using the internal precision scale.

These instruments are factory-calibrated. The differential pressure switch DS 2 is supplied including connection set **ASD-06** (2 m connection hose, two pressure connection nipples, screws) and mounting ring **DS2 -MR**.

DS 2
with mounting ring



Schematic diagram **DS 2**

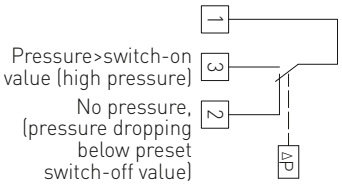

TECHNICAL DATA

Switching capacity: (Contact load)	5 (0.8) A, 250 V AC 4 (0.7) A, 30 V DC
Contact:	single-pole potential-free changeover contact, multi-layer contact, gold-plated (DDC compatible)
Pressure range:	see table, high adjustment accuracy due to individual laser-etched scale for each switch
Enclosure:	base: material PC (10 % GF), colour light grey (similar to RAL 7035), snap-on lid: material PC, transparent, cable gland PG 11 with strain relief
Temperature of medium:	–30...+85 °C
Membrane:	silicone, LSR (Liquid Silicon Rubber, tempered at +200 °C, non-outgassing, LABS-free, no emission of varnish-adhesion inhibiting substances), long-term stability of switching points due to trapezoidal bead membranes
Humidity:	< 90 % r. H., non-precipitating air
Electrical connection:	0.14 - 1.5 mm², via terminal screws with torsion protection
Pressure connection:	P1 (+) for higher pressure P2 (–) for lower pressure Ø 6.2 mm (nipples)
Mounting:	**by 4-hole base ring, plastic** (included in the scope of delivery), recommended mounting position: vertical (pressure connections downward) – factory setting, horizontal (cap up / down)
Protection class:	II (according to EN 60 730)
Protection type:	IP 54 with top cover (according to EN 60529)
Standards:	CE conformity, low-voltage directive 2014 / 35 / EU
Tests:	DVGW (according to DIN 1854), VDE 0630, EN 61058, directive on gas devices 2009 / 142 / EU, CE 0085 A P 0918
FUNCTION	Contact 1 - 2 breaks when pressure / differential pressure rises to the preset value. Contact 1- 3 closes when pressure / differential pressure drops and can be used as signal contact.
ACCESSORIES	
ASD-06	Connection set (nipple straight) – (included in the scope of delivery)
DS2 -MR	Mounting ring (included in the scope of delivery)
WS-04	Weather and sun protection hood, 130 x 180 x 135 mm, aus stainless steel **V2A** (1.4301)

Dimensional drawing **DS 2**
with mounting ring
DS2 -MR

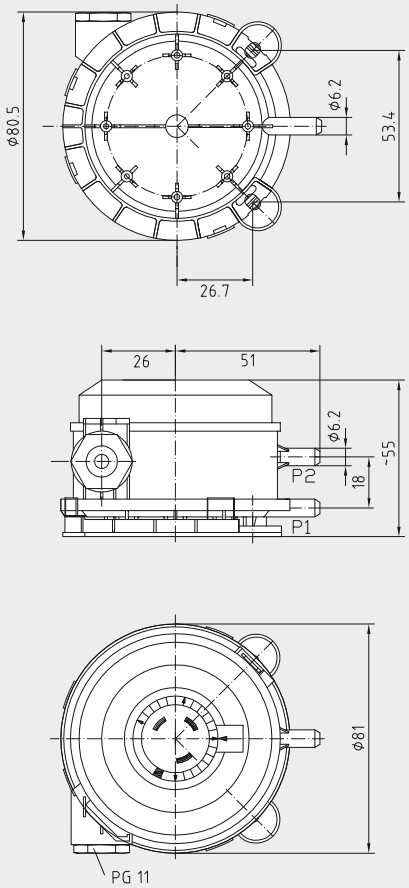

Differential pressure switches for air, including connection set

S+S REGELTECHNIK

Dimensional drawing **DS 1 - MW-Z** Mounting angle

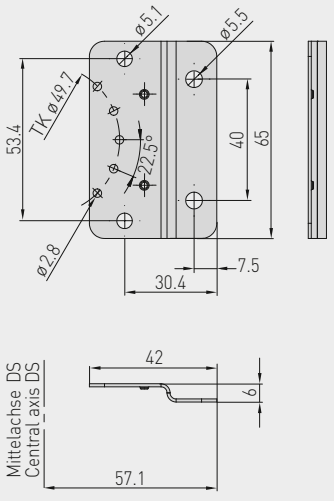

Dimensional drawing **DS 1 - MW-L** Mounting angle

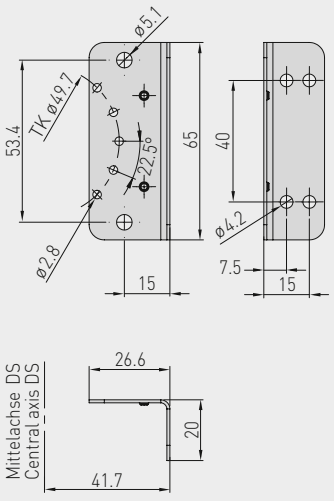

Dimensional drawing **DS 1 - MW-U** Mounting angle

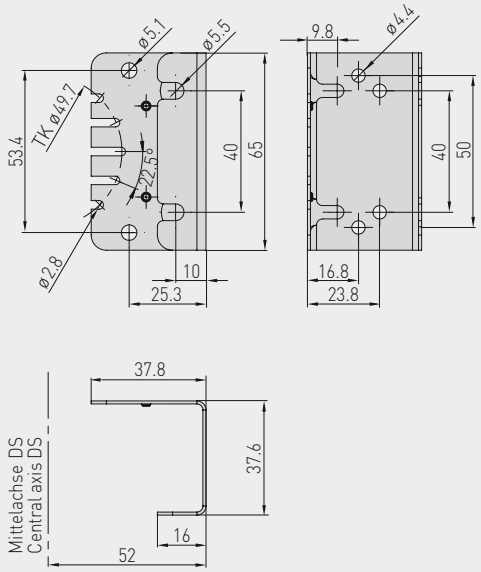

Mounting diagram **DS 1 / DS 2**

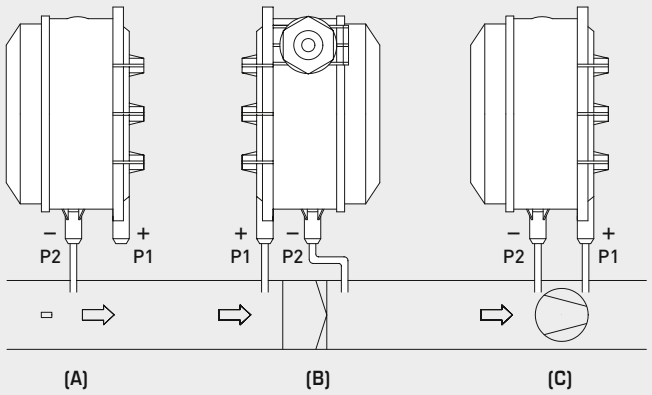

DS 1 / DS 2 Connection



Setting potentiometer (internal setting)

Connecting terminals secured against turning

TYPES OF MONITORING:

(A) Below-atmospheric pressure:
P1 (+) is not connected but open against atmosphere
P2 (–) connected to inside of duct

(B) Filter:
P1 (+) connected upstream of filter
P2 (–) connected downstream of filter

(C) Ventilator:
P1 (+) connected downstream of ventilator
P2 (–) connected upstream of ventilator

Pressure connections at the pressure switch are marked with P1 (+) for higher pressure and P2 (–) for lower pressure.

Conversion table for pressure values:

Unit =	bar	mbar	Pa	kPa	mH_2O
1 Pa	0.00001 bar	0.01 mbar	1 Pa	0.001 kPa	0.000101971 mH_2O
1 kPa	0.01 bar	10 mbar	1000 Pa	1 kPa	0.101971 mH_2O
1 bar	1 bar	1000 mbar	100000 Pa	100 kPa	10.1971 mH_2O
1 mbar	0.001 bar	1 mbar	100 Pa	0.1 kPa	0.0101971 mH_2O
1 mH_2O	0.0980665 bar	98.0665 mbar	9806.65 Pa	9.80665 kPa	1 mH_2O

Dimensional drawing **DS-2-MR** Mounting ring

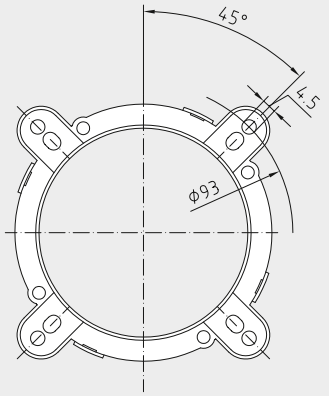

Dimensional drawing **ASD-06** Connection set

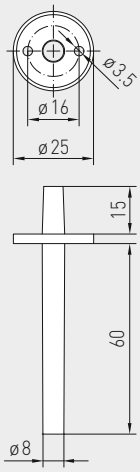

Dimensional drawing **ASD-07** Connection nipple

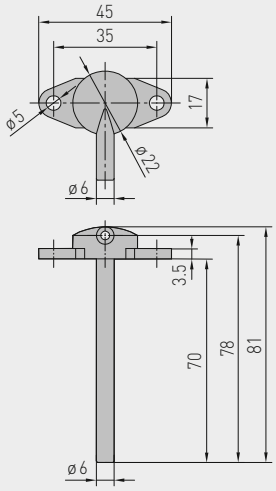

WS-04
Weather and sun protection hood (optional)



ASD-06
Connection set



ASD-07
Connection nipple



PREMASREG® DS 1 Differential pressure switches with mounting angle, *Premium*
PREMASREG® DS 2 Differential pressure switches with mounting ring, *Standard*

Type	Pressure range (adjustable)		Operating Difference approx.	Max. Pressure	Item No.
DS 1 / WG02	*Premium*				**with mounting angle DS-MW-Z**
DS-106	20… 300 Pa	(0.2…3.0 mbar)	0.1 mbar ± 15 %	5000 Pa (50 mbar)	1302-4011-0000-000
DS-106 A	50… 500 Pa	(0.5…5.0 mbar)	0.2 mbar ± 15 %	5000 Pa (50 mbar)	1302-4012-0000-000
DS-106 B	100…1000 Pa	(1.0…10.0 mbar)	0.4 mbar ± 15 %	5000 Pa (50 mbar)	1302-4013-0000-000
DS-106 C	500…2000 Pa	(5.0…20.0 mbar)	1.0 mbar ± 15 %	5000 Pa (50 mbar)	1302-4014-0000-000
DS-106 D	1000…5000 Pa	(10.0…50.0 mbar)	2.5 mbar ± 15 %	7500 Pa (75 mbar)	1302-4015-0000-000
DS 2 / WG03B	*Standard*				**with mounting ring**
DS-205 F	20… 300 Pa	(0.2…3.0 mbar)	0.1 mbar ± 15 %	5000 Pa (50 mbar)	1302-4026-0000-000
DS-205 B	50… 500 Pa	(0.5…5.0 mbar)	0.2 mbar ± 15 %	5000 Pa (50 mbar)	1302-4022-0000-000
DS-205 D	100…1000 Pa	(1.0…10.0 mbar)	0.4 mbar ± 15 %	5000 Pa (50 mbar)	1302-4027-0000-000
DS-205 E	500…2000 Pa	(5.0…20.0 mbar)	1.0 mbar ± 15 %	5000 Pa (50 mbar)	1302-4028-0000-000
Accessories					
DS-MW-Z	Sheet steel **mounting angle** in **Z**-form **(DS 1: included in the scope of delivery)**				7100-0063-0000-000
DS-MW-L	Sheet steel **mounting angle** in **L**-form				7100-0063-1000-000
DS-MW-U	Sheet steel **mounting angle** in **U**-form				7100-0060-9000-000
ASD-06	**Connection set (included in the scope of delivery),** consisting of 2 connection nipples (straight) made of ABS, 2 m PVC hose, soft, and 4 tapping screws				7100-0060-3000-000
ASD-07	**2 connection nipples** (at 90 degree angle) made of plastic, ABS				7100-0060-7000-000
WS-04	**Weather and sun protection hood**, 130 x 180 x 135 mm, stainless steel **V2A** (1.4301)				7100-0040-7000-000
	For further information, see last chapter Accessories!				

PREMASGARD® SHD-SD

**Pressure measuring transducers,
incl. DIN plug-in connectors,
with active output**

S+S REGELTECHNIK

The pressure measuring transducer **PREM**ASGARD® **SHD-SD** measures relative pressures in the bar range. It converts the measurand pressure into standard signals of 0 -10 V or 4...20 mA. Process connection is G ½" straight external pipe thread. SHD-SD is used for pressure measurement in gaseous and liquid media. Applications of this pressure transmitter are in hydraulics, pneumatics, process technology, in mechanical and plant engineering.
Not applicable for ammonia and Freon!

SHD-SD



TECHNICAL DATA

Power supply:	24 V AC / DC for output 0-10 V 7 - 33 V DC for output 4 ... 20 mA
Measuring ranges:	see table (other ranges upon request)
Output signal:	0-10 V, 3-wire, (working resistance > 10 kOhm) or 4... 20 mA, 2-wire, (working resistance < (UB (V) -7 V) / 0,02 A; R_L depending on working resistance
Electrical connection:	0.25 - 1.5 mm², via plug-in connector DIN EN 175301-803-A (included in the scope of delivery)
Pressure connection:	G ½" sealing at the back, and manometer (combined) with profile gasket FPM, special WW G ¼" DIN 3852
Type of pressure:	relative
Measuring principle:	**ceramic measuring cell**
Temperature of medium:	–15...+ 125 °C
Mounting:	directly on pressure line
Enclosure:	stainless steel **V2A** (1.4305)
Connecting head:	plastic, approx. 98 x 50 x 34 mm
Medium contacting parts:	stainless steel **V2A** (1.4305); measuring element ceramic Al_2O_3 (96%); sealing material FPM (Viton)
Response time:	2 ms (1 ms typical)
Load changes:	< 100 Hz
Characteristic line:	± 0.3 %
Overload range / Bursting pressure:	< 4 bar: 3 x FS > 4 bar: 2.5 x FS
Protection class:	III (according to EN 60 730)
Protection type:	IP 65 (according to EN 60 529)
Standards:	CE conformity, electromagnetic compatibility according to EN 61 326, EMC directive 2014 / 30 / EU
Tests:	Drinking water approval according to NSF/ANSI 61/372, UL-certified according to ANSI/UL 61010-1
Optional:	**Display module**, made of plastic, polyamide material, black colour, extra height: approx. 73 mm, pluggable, **factory-calibrated and configured**, for displaying the differential pressure (in bar, other units available upon request)

Dimensional drawing **SHD-SD**

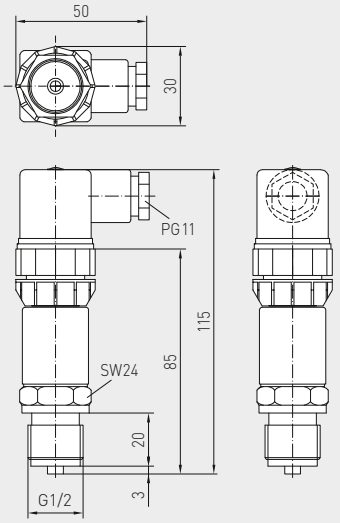

Connecting diagram **SHD-SD-U**

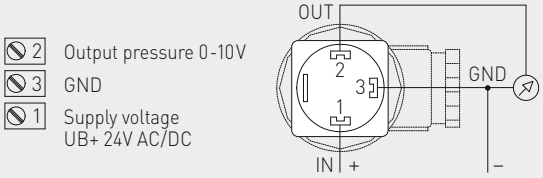

Connecting diagram **SHD-SD-I**

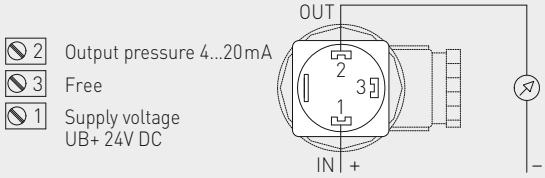

PREMASGARD® SHD-SD Pressure measuring transducers, *Standard*

Type / WG01	Measuring Range	Item No.
SHD-SD-U		**U-variant**
SHD-SD-U 6	0...6 bar	1301-2121-0550-120
SHD-SD-U 10	0...10 bar	1301-2121-0560-120
SHD-SD-U 16	0...16 bar	1301-2121-0570-120

Type / WG01	Measuring Range	Item No.
SHD-SD-I		**I-variant**
SHD-SD-I 6	0...6 bar	1301-2122-0550-000
SHD-SD-I 10	0...10 bar	1301-2122-0560-000
SHD-SD-I 16	0...16 bar	1301-2122-0570-000

The pressure measuring transducer **PREM**ASGARD® **SHD** measures relative pressures in the bar range. It converts the measurand pressure into standard signals of 0-10 V or 4...20 mA. Process connection is G ½" straight external pipe thread. SHD is used for pressure measurement in gaseous and liquid media. Applications of this pressure transmitter are in hydraulics, pneumatics, process technology, in mechanical and plant engineering. The pressure measuring cell is gasketless welded together with the pressure pick-up.

SHD



TECHNICAL DATA

Power supply:	24 V AC / DC for output 0 –10 V 7 - 33 V DC for output 4 ... 20 mA
Measuring ranges:	see table (other ranges upon request)
Output signal:	0-10 V, 3-wire, (working resistance > 10 kOhm) or 4 ... 20 mA, 2-wire, (working resistance < (UB (V) -7 V) / 0.02 A ; R_L depending on working resistance
Electrical connection:	0.25 - 1.5 mm², via plug-in connector DIN EN 175301-803-A (included in the scope of delivery)
Pressure connection:	G ½" sealing at the back, and manometer (combined) with profile gasket FPM, special WW G ¼" DIN 3852
Type of pressure:	relative
Measuring principle:	**steel measuring cell**
Temperature of medium:	–40...+135 °C
Mounting:	directly on pressure line
Enclosure:	stainless steel **V2A** (1.4305)
Connecting head:	plastic, approx. 98 x 50 x 34 mm
Medium contacting parts:	stainless steel **V2A** (1.4305)
Response time:	2 ms (1 ms typical)
Characteristic line:	± 0.3 %
Overload range:	< 6 bar: 5 x of final value > 6 bar: 3 x of final value (max. 1500 bar)
Bursting pressure:	< 6 bar: 10 x of final value > 6 bar: 6 x of final value (max. 2500 bar)
Protection class:	III (according to EN 60 730)
Protection type:	IP 65 (according to EN 60 529)
Standards:	CE conformity, electromagnetic compatibility according to EN 61 326, EMC directive 2014 / 30 / EU
Tests:	Drinking water approval according to NSF/ANSI 61/372, UL-certified according to ANSI/UL 61010-1
Optional:	**Display module**, made of plastic, polyamide material, black colour, extra height: approx. 73 mm, pluggable, **factory-calibrated and configured**, for displaying the differential pressure (in bar, other units available upon request)

Dimensional drawing **SHD**

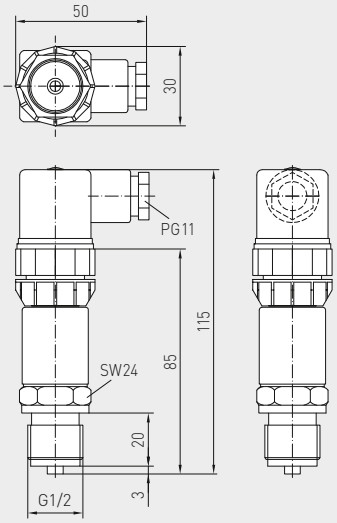

Connecting diagram **SHD-U**

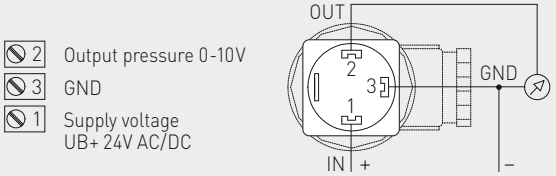

Connecting diagram **SHD-I**

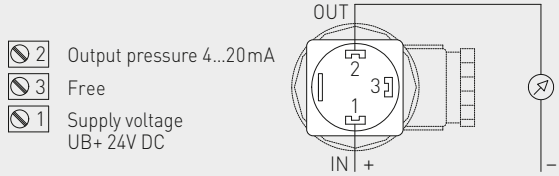

PREMASGARD® SHD Pressure measuring transducers, *Premium*

Type / WG01	Measuring Range	Item No.
SHD-U		**U-variant**
SHD-U 1	0...1 bar	1301-2111-0520-220
SHD-U 2,5	0...2.5 bar	1301-2111-0530-220
SHD-U 6	0...6 bar	1301-2111-0550-220
SHD-U 10	0...10 bar	1301-2111-0560-220
SHD-U 16	0...16 bar	1301-2111-0570-220
SHD-U 25	0...25 bar	1301-2111-0580-220
SHD-U 40	0...40 bar	1301-2111-0590-220

Type / WG01	Measuring Range	Item No.
SHD-I		**I-variant**
SHD-I 1	0...1 bar	1301-2112-0520-120
SHD-I 2,5	0...2.5 bar	1301-2112-0530-120
SHD-I 6	0...6 bar	1301-2112-0550-120
SHD-I 10	0...10 bar	1301-2112-0560-120
SHD-I 16	0...16 bar	1301-2112-0570-120
SHD-I 25	0...25 bar	1301-2112-0580-120
SHD-I 40	0...40 bar	1301-2112-0590-120

PREMASGARD® SHD 400

**Pressure measuring transducers,
incl. DIN plug-in connectors,
with active output**

S+S REGELTECHNIK

The pressure sensor / differential pressure sensor **PREM**ASGARD® **SHD 400** is used to measure above-atmospheric, below-atmospheric, and differential pressures in virtually neutral gaseous and liquid media. A rugged and non-sensitive ceramic pressure measuring cell is used. The measuring pressure acts on the ceramic membrane, causing it to deform. This membrane is fitted with a DMS bridge whose resistance value changes in proportion to the degree of deformation. The electronics integrated in the transmitter housing converts this change in resistance into a standard signal of 0-10 V or 4...20 mA. The process connection is implemented via two internal threads G ⅛".
It is used in all areas of industrial and sanitary measurement technology, such as differential pressure measurement between the supply and return lines in heating systems or for monitoring filters, fans, and compressors.

TECHNICAL DATA

Power supply:	24 V AC / DC (± 20 %) for U-variant 24 V DC (± 20 %) for I-variant
Measuring ranges:	see table
Output signal:	0-10 V or 4...20 mA
Permissible working resistance: (at nominal voltage)	R_L = 2 kΩ for U-variant R_L = 700 Ω for I-variant
Electrical connection:	0.25 - 1.5 mm², via plug-in connector DIN EN 175301-803-A (included in the scope of delivery)
Pressure connection:	G ⅛" internal thread (optional connection types upon request)
Type of pressure:	differential pressure, above- or below atmospheric pressure
Temperature of medium:	–20...+80 °C (non-freezing media)
Mounting:	by 2x M4 screw or fixing plate for wall mounting (installation arbitrary)
Enclosure:	stainless steel **V2A** (1.4305)
Medium contacting parts:	ceramic, stainless steel **V2A** (1.4305), brass, fluorinated rubber
Response time:	< 5 ms
Characteristic line:	< 1 % of final value (at +25 °C)
Overload range:	see table (one-sided max. pressure)
Bursting pressure:	64 bar
Protection class:	III (according to EN 60 730)
Protection type:	IP 65 (according to EN 60 529)
Standards:	CE conformity, electromagnetic compatibility according to EN 61 326, EMC directive 2014 / 30 / EU
ACCESSORIES	
VSD-xx-VA / ms	Fitting set, made of stainless steel VA or brass (see table)
WH-400	Fixing plate for wall mounting (wall holder)

Connections **SHD 400**

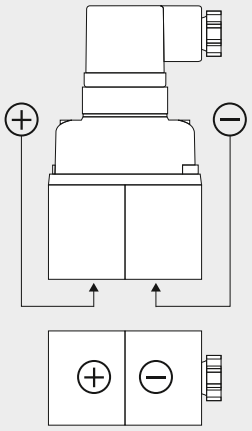

A plus and minus symbol etched on the enclosure identifies the side on which the respective pressure connection is to be connected below:

(+) for higher pressure
(–) for lower pressure



Schematic diagram **SHD 400**

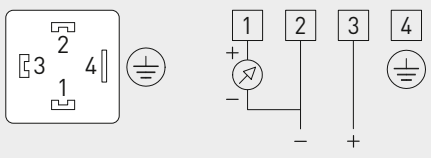

Connecting diagram **SHD 400-U**

1 Output pressure 0-10V
2 UB– GND
3 UB+ 24V AC/DC
4 GND

Connecting diagram **SHD 400-I**

1 Output pressure 4...20mA
2 UB– GND
3 UB+ 24V DC
4 GND

Dimensional drawing **SHD 400**

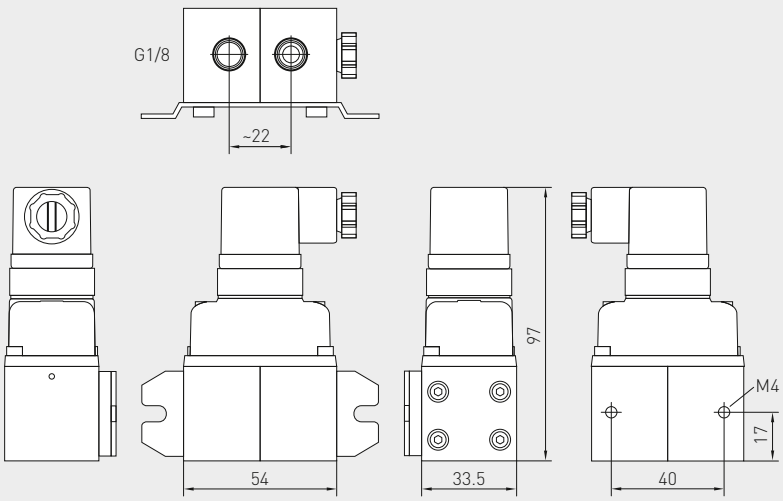

SHD 400



VSD-06-VA
Fitting set
(optional)



WH-400
Wall holder
(optional)



PREMASGARD® SHD 400 Pressure measuring transducers, *Standard*

Type / WG01	Measuring Range	One-sided max. pressure (+)	(–)	System pressure	Output	Item No.
SHD 400 - U						
SHD 400 U VA 2 BAR	0... 2 bar	10 bar	5 bar	16 bar	0-10 V	1301-4131-0850-139
SHD 400 U VA 4 BAR	0... 4 bar	21 bar	15 bar	16 bar	0-10 V	1301-4131-0540-139
SHD 400 U VA 6 BAR	0... 6 bar	21 bar	15 bar	16 bar	0-10 V	1301-4131-0550-139
SHD 400 U VA 10 BAR	0...10 bar	25 bar	25 bar	45 bar	0-10 V	1301-4131-0560-139
SHD 400 - I						
SHD 400 I VA 2 BAR	0... 2 bar	10 bar	5 bar	16 bar	4...20 mA	1301-4132-0850-139
SHD 400 I VA 4 BAR	0... 4 bar	21 bar	15 bar	16 bar	4...20 mA	1301-4132-0540-139
SHD 400 I VA 6 BAR	0... 6 bar	21 bar	15 bar	16 bar	4...20 mA	1301-4132-0550-139
SHD 400 I VA 10 BAR	0...10 bar	25 bar	25 bar	45 bar	4...20 mA	1301-4132-0560-139
Accessories						
VSD-06-MS	Fitting set made of brass, 6 mm					7100-0064-1100-000
VSD-08-MS	Fitting set made of brass, 8 mm					7100-0064-1300-000
VSD-06-VA	Fitting set made of stainless steel VA, 6 mm					7100-0064-1200-000
VSD-08-VA	Fitting set made of stainless steel VA, 8 mm					7100-0064-1400-000
WH-400	Fixing plate for wall mounting (wall holder)					7100-0066-0100-000

PREMASGARD® SHD 692

**Differential pressure transmitters,
incl. DIN plug-in connectors and mounting angle,
with active output**

S+S REGELTECHNIK

The pressure sensor / differential pressure sensor **PREM**ASGARD® **SHD-692** is used for pressure measurement in gaseous and liquid media. It converts the measurand into standard signals of 0-10 V or 4...20 mA. Process connection is 2 x G⅛" - 27 NPT internal thread. SHD-692 differential pressure transmitters are used in piping and hydraulic systems, in mechanical and plant engineering as well as in building automation.
Not applicable for ammonia and Freon!

SHD 692
with display



TECHNICAL DATA

Power supply:	24 V AC (+15 % / –10 %), 18 - 33 V DC for U-variant 24 V DC (± 20 %) for I-variant
Measuring ranges:	see table
Output signal:	0-10 V (3-wire connection) or 4...20 mA (2-wire connection)
Permissible working resistance: (at nominal voltage)	 R_L > 10 kΩ for U-variant R_L < 600 Ω for I-variant
Electrical connection:	0.25 - 1.5 mm², via plug-in connector DIN EN 175301-803-A (included in the scope of delivery)
Pressure connection:	screw pipe connection for 6 mm pipe (G⅛" - 27 NPT internal thread)
Type of pressure:	differential pressure
Measuring principle:	ceramic measuring cell
Medium:	liquid or gaseous
Temperature of medium:	–15...+80 °C
Mounting:	installation arbitrary
Enclosure:	stainless steel **V2A** (1.4305)
Medium contacting parts:	INOX (1.4305), ceramics, sealing material EPDM
Response time:	< 5 ms
Class:	0.5 %
Total error:	< 1.3 %
Overload range:	see table (one-sided max. pressure)
System pressure:	max. 25 bar (P1 + P2)
Bursting pressure:	1.5 x system pressure
Insulating resistance:	≥ 100 MOhm, at +20 °C (500 V DC)
Protection class:	III (according to EN 60 730)
Protection type:	IP 65 (according to EN 60 529)
Standards:	CE conformity, electromagnetic compatibility according to EN 61 326, EMC directive 2014 / 30 / EU
Optional:	**Display-Modul,** made of plastic, polyamide material, black colour, extra height: approx. 73 mm, pluggable, **factory-calibrated and configured**, for displaying the differential pressure (in bar, other units available upon request)

Dimensional drawing **SHD 692**
Mounting angle

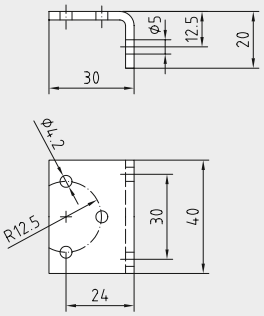

Connecting diagram **SHD 692-U**

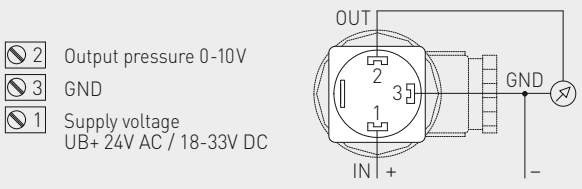

Connecting diagram **SHD 692-I**

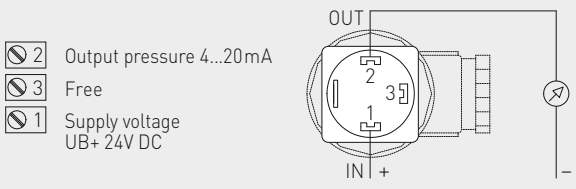

Dimensional drawing **SHD 692**

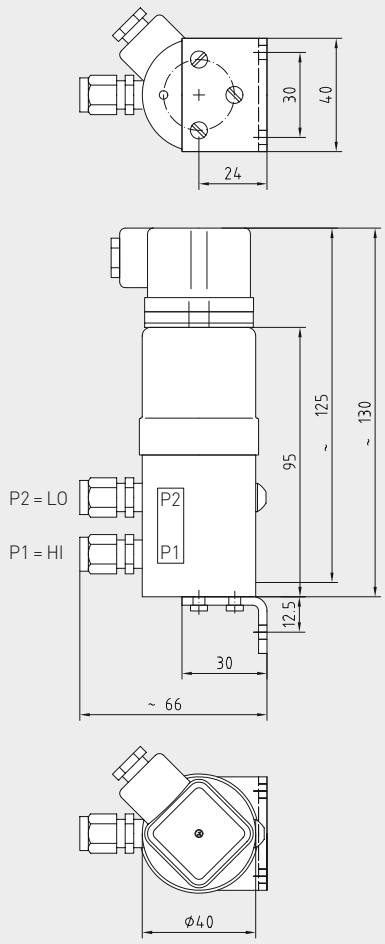

SHD 692
without display



Display module
(optional)



PREMASGARD® SHD 692 Differential pressure transmitters, *Deluxe*

Type / WG02	Measuring Range	One-Sideed max. pressure	Output	Display	Item No.
SHD 692-U					**U-variant**
SHD 692-U-900	0...0.1 bar	0.6 bar	0-10 V		1301-4121-0500-000
SHD 692-U-907	0...0.5 bar	3 bar	0-10 V		1301-4121-0510-000
SHD 692-U-912	0...1 bar	5 bar	0-10 V		1301-4121-0520-000
SHD 692-U-916	0...2.5 bar	12 bar	0-10 V		1301-4121-0530-000
SHD 692-U-918	0...4 bar	12 bar	0-10 V		1301-4121-0540-000
SHD 692-I					**I-variant**
SHD 692-I-900	0...0.1 bar	0.6 bar	4...20 mA		1301-4122-0500-000
SHD 692-I-907	0...0.5 bar	3 bar	4...20 mA		1301-4122-0510-000
SHD 692-I-912	0...1 bar	5 bar	4...20 mA		1301-4122-0520-000
SHD 692-I-916	0...2.5 bar	12 bar	4...20 mA		1301-4122-0530-000
SHD 692-I-918	0...4 bar	12 bar	4...20 mA		1301-4122-0540-000
Optional:	**Display module,** factory-calibrated and configured			■	on request



Light Intensity & Motion

PHOTASGARD® light intensity sensors and **KIN**ASGARD® motion or presence detectors are your perfect choice when it comes to saving energy in climatized and security installations.
These S+S solutions keep your costs of lighting, shading, heating and cooling in the “green” range. Incidentally, they also have a perfect fit in presence detection and security zones.

APPLICATION RANGE

> Heating, ventilation, air conditioning and lighting systems
> Greenhouses, shading and solar protection
> Production facilities and offices in line with occupational health and safety regulations
> Access control, protected areas and security zones
> Parking lots, courtyards and corridors



PHOTASGARD® & **KIN**ASGARD®

374 – 393

Light intensity sensors

AHKF	Outdoor light intensity sensor	**381**
RHKF	Room light intensity sensor	**380**
DHKF	In-ceiling light intensity sensor	**383**

Motion detectors

ABWF	Outdoor motion detector	**385**
RBWF	Room motion detector	**384**
DBWF	In-ceiling motion detector	**387**
DBWF-C	In-ceiling motion detector	**387**

Light intensity and motion detectors

ABWF/LF	Outdoor motion detector and light sensor	**391**
RBWF/LF	Room motion sensor and light sensor	**389**
DBWF/LF/FTF	In-ceiling motion detector, light sensor, temperature sensor and humidity sensor	**393**

Light Intensity & Motion

MADE IN GERMANY

PHOTASGARD® & **KIN**ASGARD®

Multifunctional sensor technology for light and movement

Broad Spectrum

Our active motion and light intensity sensors are designed to be multifunctional. This reduces the diversity of types and expands their possible applications. Thanks to microprocessor technology, almost any measuring range can be represented, including custom specifications. Multi-range switching is selectable via DIP switches.

Optimum Precision

The devices are tested according to the latest criteria. Each sensor is precisely re-adjustable using offset potentiometers. Take advantage of our experience, our development, manufacturing and product know-how and order these products directly from the manufacturer.

Approved Safety

RoHS conforming materials

ESD compliant manufacturing

CE compliance tested by external laboratories

Certified Quality

Our development and production in Nuremberg/Germany is certified by TÜV Thüringen according to DIN EN ISO 9001:2015.

GOST certificates

EAC certified

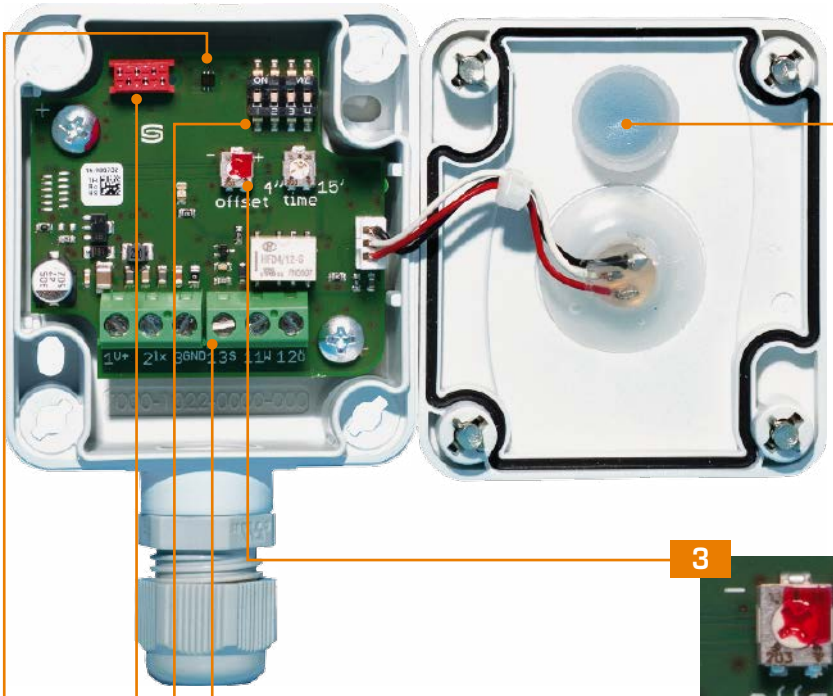

2



Diffusor

With diffusion and absorption rates specially matched to the light intensity sensor, extends the receiving characteristics over a wider angular range

3

Offset Potentiometer

For fine adjustment (zero point offset) and readjustment upon recalibration

4



Screw Terminals

Active output signals 0-10 V or 4...20 mA

1

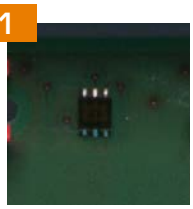

Digital Photo Sensor

With high resolution and resistance to ageing, for a wide linear brightness range of 0 -120 kLux

> Special measuring ranges possible, e.g. for twilight

> High measuring accuracy with max. < 5 % deviation

5

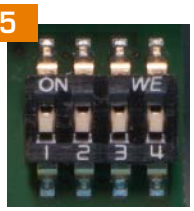

DIP Switches

For multi-range toggling and setting of 4 measuring ranges:

RHKF 0.5 / 1 / 2 / 20 kLux
AHKF 0.5 / 1 / 20 / 60 kLux

6



Quality Assurance

Calibration and balancing are done by means of the bus system

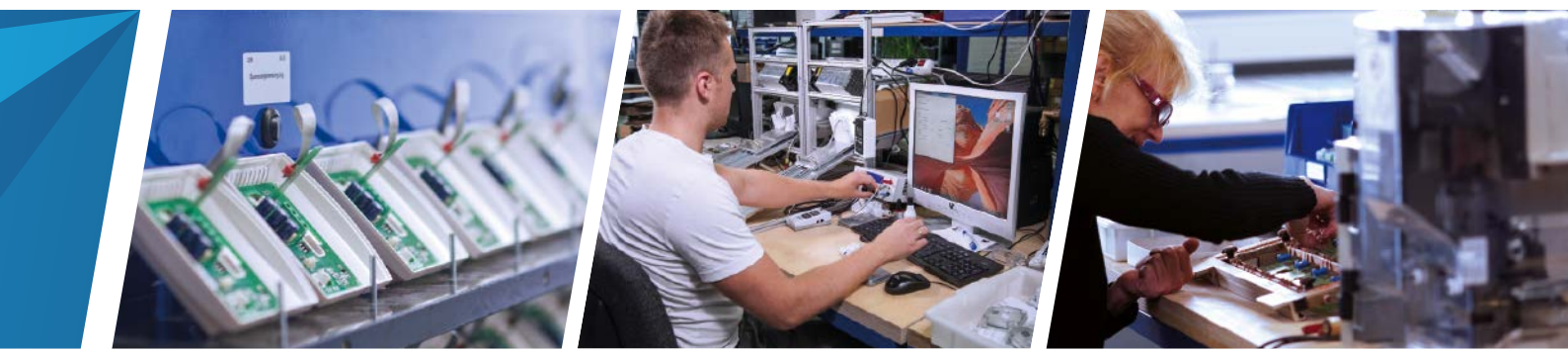

Light sensor (indoor areas) **PHOT**ASGARD®

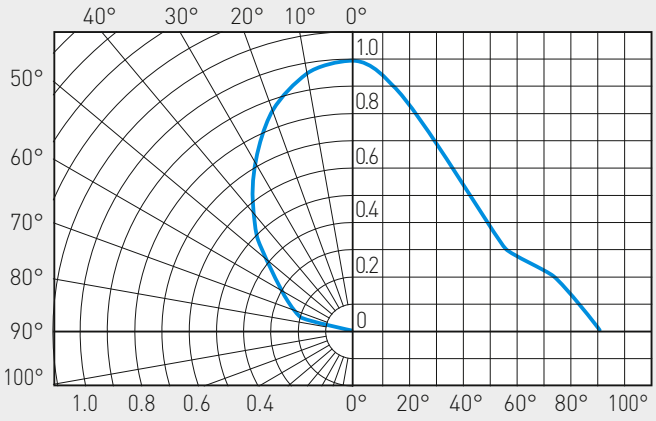

Characteristic curve showing the sensitivity of light sensor (indoor areas) relative to the angle of incidence of light.

Light sensor (outdoor areas) **PHOT**ASGARD®

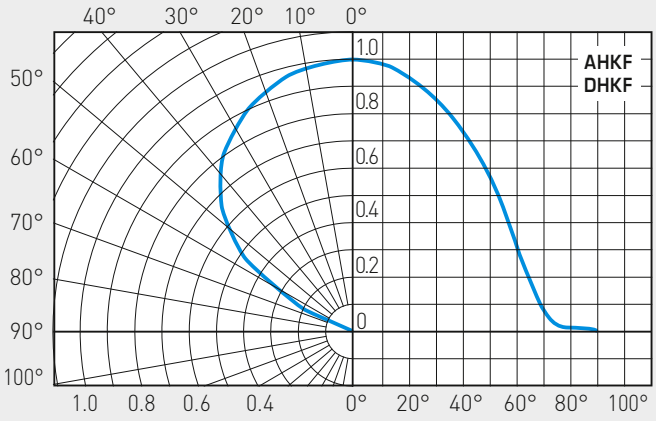

Characteristic curve showing the sensitivity of light sensor (outdoor areas) relative to the angle of incidence of light.

Light sensor (indoor and outdoor areas) **PHOT**ASGARD®

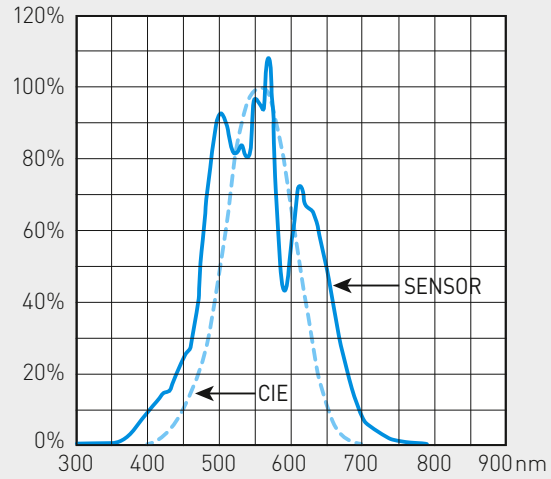

Characteristic curve showing the sensitivity of light sensor on the circuit board in respect of the wavelength of light. The broken line represents the light perception of the human eye.

The light sensor used in **PHOT**ASGARD® light intensity sensors was specifically adapted to the sensitivity of the human eye. Its greatest sensitivity is in the range of 350 nm to 820 nm.

With its special filter, the sensor is therefore ideally suited for measuring exposure to daylight and /or for measuring artificial light of high colour temperature (similar to sunlight).

Aperture angle **KIN**ASGARD®

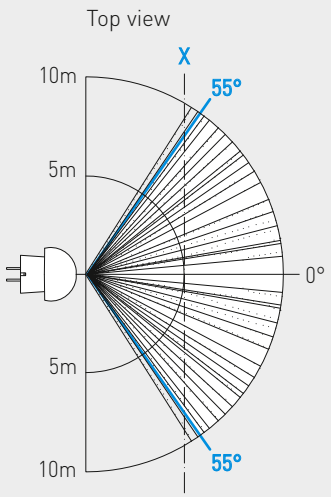

High-end variant infra-red sensor with enlarged aperture angle of 100° or 110° over 360 degrees circumference and 10 m of reach.

Detection range **KIN**ASGARD®

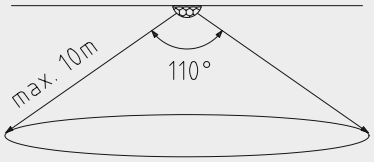

Principle **KIN**ASGARD®

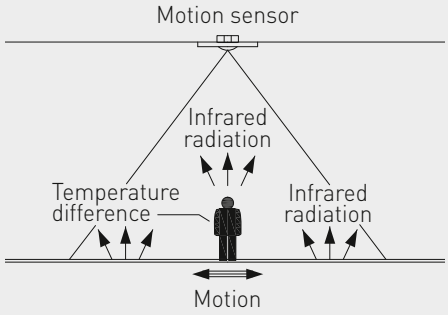

Sensor recognizes the temperature difference resulting from the movement of persons or objects.

In all **KIN**ASGARD® motion sensors and presence detectors, a high-end variant infra-red sensor with enlarged angle of aperture is exclusively used.

The patented lens system with 20 individual lenses results in only very small dark areas that are only a few centimetres wide even at a distance of 10 m, thereby reliably detecting small movements.

The sensor recognizes changes in the infra-red radiation spectrum, meaning heat radiation, resulting from the movement of persons or objects.
Such movements generate a temporary change of the temperature gradient in the field.

Due to the constant presence of body (heat) radiation, this sensor is ideally suitable for detecting persons. The temperature difference between sensor and object must be > 5 K.

Room light intensity sensors with multi-range switching and active output

S+S REGELTECHNIK

The room light intensity sensor **PHOT**ASGARD® **RHKF** with four switchable measuring ranges (four devices in one) measures the luminous intensity with a diffuser and is used to control luminaries, lighting systems, Venetian blinds and canvas blinds, etc., to monitor lighting conditions at workplaces, in storage halls, workshops and corridors, in indoor areas, in industrial halls, in offices as well as in residential and business facilities, for daylight-dependant constant light control, as light intensity or twilight sensor and to control sunshade equipment avoiding unnecessary heating-up of rooms. Therefore it minimizes your variety of types and stock keeping while covering a greater range of universal applications. The sensor used in PHOTASGARD® light intensity sensors was specifically adapted to the sensitivity of the human eye. Its greatest sensitivity is in the range of 350 nm to 820 nm. With its special filter, the sensor is therefore ideally suited for measuring exposure to daylight and / or for measuring artificial light of high colour temperature (similar to sunlight).

RHKF



TECHNICAL DATA

Power supply:	24 V AC (± 20 %); 15...36 V DC for U variant 15...36 V DC for I variant, depending on working resistance, residual ripple stabilised ± 0.3 V
Working resistance:	R_a (ohm) = (U_b -14 V) / 0.02 A for I variant
Load resistance:	R_L > 5 kOhm for U variant
Power consumption:	< 1 W at 24 V DC; < 2 VA at 24 V AC
Sensor:	light sensor with diffuser (see beginning of this chapter)
Measuring ranges:	**multi-range switching** (via DIP switches) with 4 switchable measuring ranges **0...500 Lux / 1 kLux / 5 kLux / 20 kLux** (other individual ranges optional, e. g. 100 kLux)
Output:	4...20 mA or 0-10 V (2- or 3-wire connection)
Deviation:	typically < 5 % of final value
Ambient temperature:	0...+50 °C
Electrical connection:	0.14 - 1.5 mm², via terminal screws
Enclosure:	plastic, material ABS, colour pure white (similar to RAL 9010)
Dimensions:	85 x 85 x 27 mm (Baldur 1)
Installation:	wall mounting or on in-wall flush box, Ø 55 mm, base with 4-hole for mounting on vertically or horizontally installed in-wall flush boxes for cable entry from the back, with predetermined breaking point for on-wall cable entry from top / bottom in case of plain on-wall installation
Protection class:	III (according to EN 60 730)
Protection type:	IP 30 (according to EN 60 529)
Standards:	CE conformity, electromagnetic compatibility according to EN 61 326, EMC directive 2014 / 30 / EU

Measuring ranges (selectable)	DIP 1	DIP 2	DIP 3	DIP 4
0...500 Lux	**ON**	OFF	OFF	OFF
0... **1 kLux** (default)	OFF	**ON**	OFF	OFF
0... 5 kLux	OFF	OFF	**ON**	OFF
0... 20 kLux	OFF	OFF	OFF	**ON**

Connecting diagram **RHKF-U**



1 UB+ supply voltage 24V AC/DC
2 Output light intensity 0-10V in lux
3 UB– GND

Connecting diagram **RHKF-I**



1 UB+ supply voltage 24V AC/DC
2 Output light intensity 4...20mA in lux

Dimensional drawing — Enclosure **Baldur 1 RHKF**

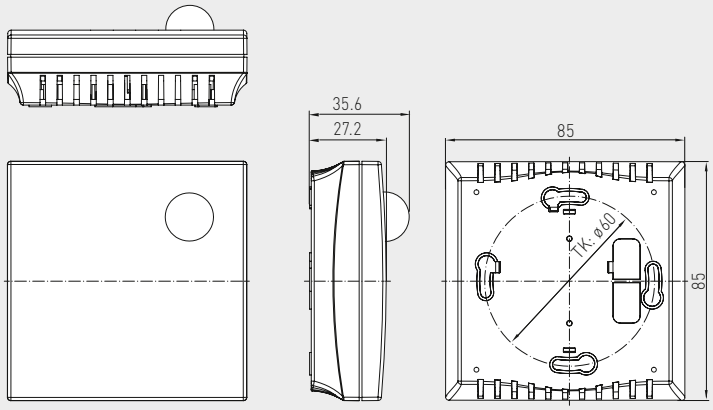

Schematic diagram **RHKF**

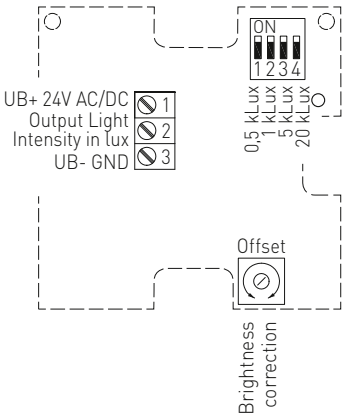

PHOTASGARD® RHKF Room light intensity sensors

Type / WG01	Measuring Range Light Intensity (adjustable)	Output Light Intensity	Item No.
RHKF			
RHKF-I	0...500 Lux / 1 kLux / 5 kLux / 20 kLux	4 ... 20 mA	1601-41A2-2000-000
RHKF-U	0...500 Lux / 1 kLux / 5 kLux / 20 kLux	0-10 V	1601-41A1-2000-000
Extra charge:	Other individual measuring ranges optional, e. g. 100 kLux		on request

The light intensity sensor / twilight sensor **PHOT**ASGARD® **AHKF** with six switchable measuring ranges (six devices in one) measures the luminous intensity and is used to control luminaries, lighting systems, Venetian blinds and canvas blinds, etc., to monitor lighting conditions at workplaces, in greenhouses, storage halls, workshops, corridors, in outdoor areas, in industrial halls, in offices as well as in residential and business facilities, for daylight-dependant constant light control, as light intensity or twilight sensor and as sun protection control to avoid unnecessary room heating. Therefore it minimizes your variety of types and stock keeping while covering a greater range of universal applications. The sensor used in PHOTASGARD® light intensity sensors was specifically adapted to the sensitivity of the human eye. Its greatest sensitivity is in the range of 350 nm to 820 nm. With its special filter, the sensor is therefore ideally suited for measuring exposure to daylight and / or for measuring artificial light of high colour temperature (similar to sunlight).

AHKF



TECHNICAL DATA

Power supply:	24 V AC (±20 %); 15...36 V DC for U variant 15...36 V DC for I variant, depending on working resistance, residual ripple stabilised ± 0.3 V
Working resistance:	R_a (ohm) = (U_b -14 V) / 0.02 A for I variant
Load resistance:	R_L > 5 kOhm for U variant
Power consumption:	< 1 W at 24 V DC; < 2 VA at 24 V AC
Sensor:	light sensor (see beginning of this chapter)
Measuring ranges:	**multi-range switching** (via DIP switches) with 6 switchable measuring ranges **0...500 Lux / 1 kLux / 2 kLux / 5 kLux / 20 kLux / 60 kLux** (other individual ranges optional, e. g. 100 kLux)
Output:	4...20 mA or 0-10 V (2- or 3-wire connection)
Deviation:	typically < 5 % of final value
Ambient temperature:	–30...+70 °C
Electrical connection:	0.14 - 1.5 mm², via terminal screws
Enclosure:	plastic, UV-stabilised, material polyamide, 30 % glass-globe reinforced, with quick-locking screws (slotted / Phillips head combination), colour traffic white (similar to RAL 9016), enclosure cover is transparent!
Enclosure dimensions:	72 x 64 x 43.3 mm (Tyr 1)
Cable gland:	M 16 x 1.5 , including strain relief, exchangeable, max. inner diameter 10.4 mm
Installation:	on-wall
Protection class:	III (according to EN 60 730)
Protection type:	IP 65 (according to EN 60 529)
Standards:	CE conformity, electromagnetic compatibility according to EN 61 326, EMC directive 2014 / 30 / EU

Measuring ranges (selectable)	DIP 1	DIP 2	DIP 3	DIP 4
0...500 Lux	OFF	OFF	OFF	–
0... 1 kLux	**ON**	OFF	OFF	–
0... 2 kLux	OFF	**ON**	OFF	–
0... 5 kLux	**ON**	**ON**	OFF	–
0... **20 kLux** (default)	OFF	OFF	**ON**	–
0... 60 kLux	**ON**	OFF	**ON**	–

Connecting diagram **AHKF-U**



UB+ supply voltage 24V AC/DC
Output light intensity 0-10V in lux
UB– GND

Connecting diagram **AHKF-I**



UB+ supply voltage 24V AC/DC
Output light intensity 4...20mA in lux

Dimensional drawing **AHKF**

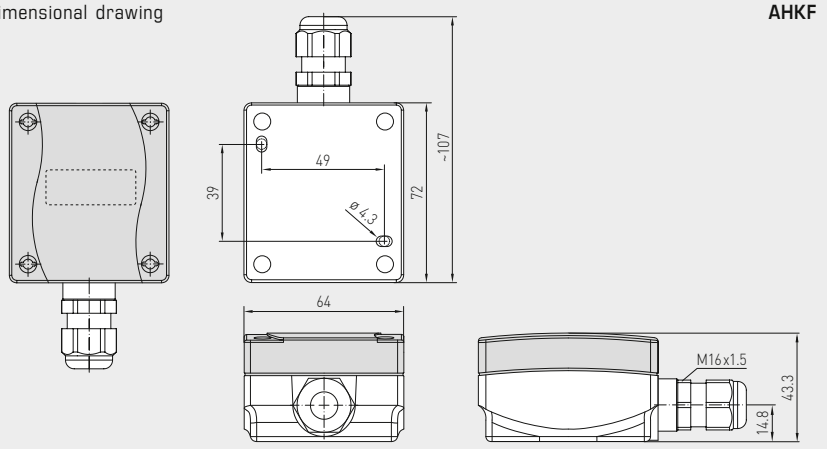

Schematic diagram **AHKF**

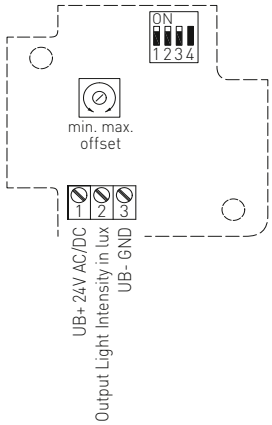

PHOTASGARD® AHKF Outdoor light intensity sensors / twilight sensors

Type / WG01	Measuring Range Light Intensity (adjustable)	Output Light Intensity	Item No.
AHKF			
AHKF-I	0...500 Lux / 1 / 2 / 5 / 20 / 60 kLux	4 ... 20 mA	1601-1112-1000-000
AHKF-U	0...500 Lux / 1 / 2 / 5 / 20 / 60 kLux	0-10 V	1601-1111-1000-000
Extra charge:	Other individual measuring ranges optional, e. g. 100 kLux		on request

PHOTASGARD® DHKF

**In-ceiling light intensity sensors,
with multi-range switching
and active output**

S+S REGELTECHNIK

The light-intensity sensor **PHOT**ASGARD® **DHKF** with six switchable measuring ranges (six devices in one) for installation in suspended ceilings. The connecting head is pluggable for quick and easy mounting. The measuring transducer is accommodated in a separate enclosure.

The sensor used was specifically adapted to the sensitivity of the human eye. Its greatest sensitivity is in the range of 350 nm to 820 nm. With its special filter, the sensor is therefore ideally suited to exposure measurement of daylight and/or for measuring artificial light of high colour temperature (similar to sunlight).

It is used for daylight-dependent constant light control, to control luminaires, lighting systems, Venetian blinds and canvas blinds, and to control light intensity and sun protection hoods to avoid unnecessary heating-up of rooms. It is used in greenhouses, storage halls, industrial halls, workshops, corridors, residential and commercial buildings.

DHKF
Connecting head, pluggable



TECHNICAL DATA

Power supply:	24 V AC (± 20 %); 15...36 V DC for U variant 15...36 V DC for I variant, depending on working resistance, residual ripple stabilised ± 0.3 V
Working resistance:	R_a (ohm) = (U_b -14 V) / 0.02 A for I variant
Load resistance:	R_L > 5 kOhm for U variant
Power consumption:	< 1 W at 24 V DC; < 2 VA at 24 V AC
Sensor:	light sensor (see beginning of this chapter)
Measuring ranges:	**multi-range switching** (via DIP switches) with 6 switchable measuring ranges **0...500 Lux / 1 kLux / 2 kLux / 5 kLux / 20 kLux / 60 kLux** (optional other individual measuring ranges, e. g. 100 kLux)
Output:	4...20 mA or 0-10 V
Deviation:	typically < 5 % of final value
Ambient temperature:	–30...+70 °C
Enclosure:	plastic, UV-stabilised, material polyamide, 30 % glass-globe reinforced, with quick-locking screws (slotted / Phillips head combination), colour traffic white (similar to RAL 9016)
Enclosure dimensions:	72 x 64 x 37.8 mm (Tyr 1)
Cable gland:	M 16 x 1.5 ; including strain relief, exchangeable, max. inner diameter 10.4 mm
Electrical connection:	2- or 3-wire (see connecting diagram), 0.14 - 1.5 mm², via terminal screws
Connecting cable:	PVC, LiYY, 4 x 0.14 mm², cable length (KL) = approx. 2 m
Connecting head:	made of plastic, material polycarbonate (PC), colour white, **pluggable**, Ø = approx. 35 mm, H = approx. 29 mm
Mounting (sensor):	in the suspended ceiling, ceiling cut-out Ø = 30 mm, cover Ø = < 35 mm
Protection class:	III (according to EN 60 730)
Protection type:	IP 65 (according to EN 60 529) enclosure only! IP 30 (according to EN 60 529) sensor in the built-in state
Standards:	CE conformity, electromagnetic compatibility according to EN 61 326, EMC directive 2014 / 30 / EU

Measuring ranges (adjustable)	**DIP 1**	**DIP 2**	**DIP 3**
0...500 Lux	OFF	OFF	OFF
0... 1 kLux	**ON**	OFF	OFF
0... 2 kLux	OFF	**ON**	OFF
0... 5 kLux	**ON**	**ON**	OFF
0... **20 kLux** (default)	OFF	OFF	**ON**
0... 60 kLux	**ON**	OFF	**ON**
Note: **DIP 4, 5, 6** are not assigned!			

Connecting diagram **DHKF-U**



UB+ supply voltage 24V AC/DC
Output light intensity 0-10V in lux
free
UB– GND

Connecting diagram **DHKF-I**



UB+ supply voltage 24V AC/DC
Output light intensity 4...20mA in lux

Schematic diagram **DHKF**

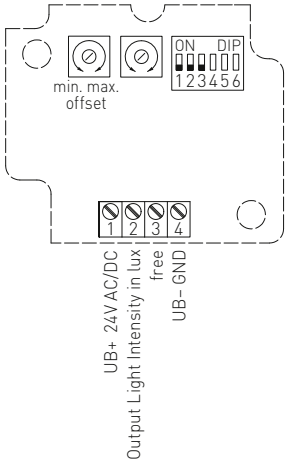

Dimensional drawing **DHKF**

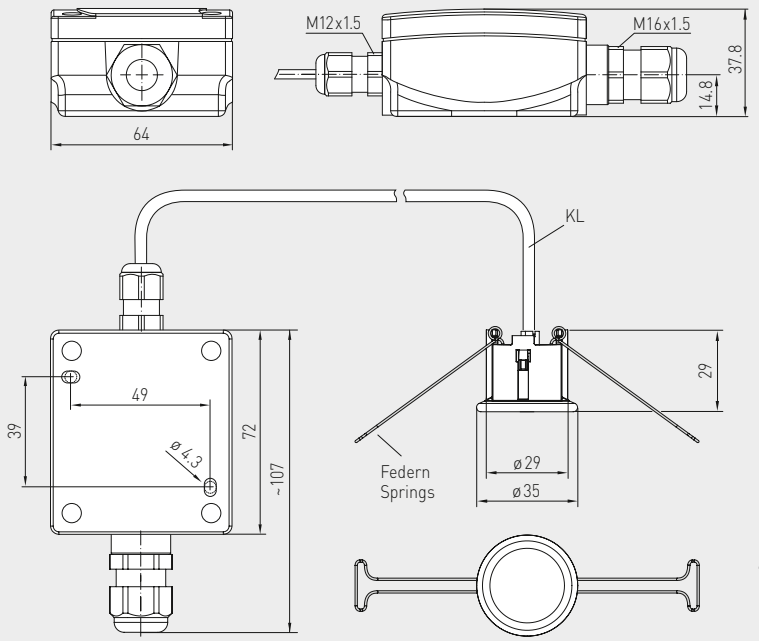

DHKF



PHOTASGARD® DHKF In-ceiling light intensity sensors			
Type / WG01	**Measuring Range** Light Intensity (adjustable)	**Output** Light Intensity	**Item No.**
DHKF			
DHKF I	0...500 Lux / 1 / 2 / 5 / 20 / 60 kLux	4 ... 20 mA	1601-6122-1000-000
DHKF U	0...500 Lux / 1 / 2 / 5 / 20 / 60 kLux	0-10 V	1601-6121-1000-000
Extra charge:	Other individual measuring ranges optional, e. g. 100 kLux		on request

S+S REGELTECHNIK

Room motion sensor with switching output

The motion sensor and presence detector **KIN**ASGARD® **RBWF** detects the presence of persons and motions and has a switching output (changeover contact). The sensor detects motions over an aperture angle of 110° and a perimeter of 360°. The patented lens system with 20 individual lenses results in only very small dark areas that are only a few centimetres wide even at a distance of 10 m, thereby reliably detecting small movements. Elegant enclosure made of plastic with snap-on lid, base with 4-hole attachment for installation on vertically or horizontally installed in-wall flush boxes, with predetermined breaking point for on-wall cable entry in case of on-wall installation. The room motion sensor is used to monitor and recognise conditions and for the motion-dependent control of room functions, e.g. for lowering temperatures in unused rooms as a motion detector. This residential room motion detector is installed in corridors, in outdoor areas, in industrial halls, in offices, in residential rooms and business facilities.

RBWF



TECHNICAL DATA

Power supply:	24 V AC (± 20 %); 15...36 V DC
Power consumption:	< 1 W at 24 V DC; < 2 VA at 24 V AC
Sensor:	infra-red motion sensor (see beginning of this chapter)
Detection range:	perimeter 360°, aperture angle 90° / 110°, reach approx. 10 m, circular
Motion detection:	of persons and objects, necessary temperature difference between subject and surroundings ≥ 5 K
Output:	without / with motion + presence, potential-free changeover contact (24 V), 1 A ohmic load
After-running time:	adjustable from 4 s to 16 min
Ambient temperature:	0...+50 °C
Electrical connection:	0.14 - 1.5 mm², via terminal screws
Enclosure:	plastic, material ABS, colour pure white (similar to RAL 9010)
Dimensions:	85 x 85 x 27 mm (Baldur 1)
Mounting:	wall mounting or on in-wall flush box, Ø 55 mm, base with 4-hole for mounting on vertically or horizontally installed in-wall flush boxes for cable entry from the back, with predetermined breaking point for on-wall cable entry from top / bottom in case of plain on-wall installation
Protection class:	III (according to EN 60 730)
Protection type:	IP 30 (according to EN 60 529)
Standards:	CE conformity, electromagnetic compatibility according to EN 61 326, EMC directive 2014 / 30 / EU

Connecting diagram **RBWF**

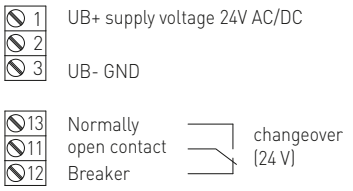

Schematic diagram **RBWF**

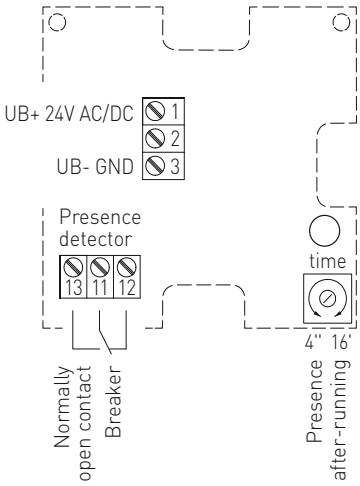

Dimensional drawing — Enclosure **Baldur 1 RBWF**

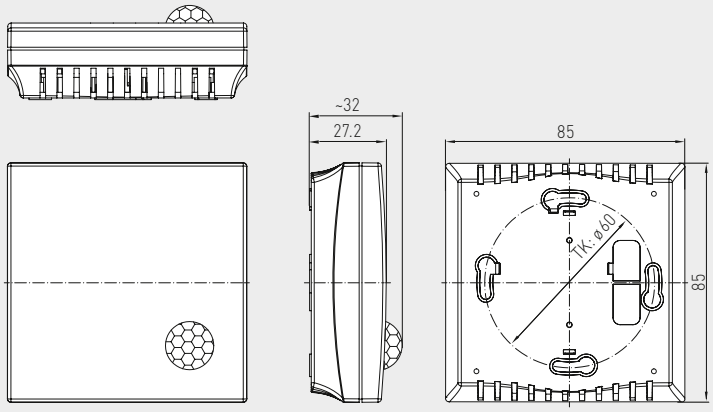

KINASGARD® **RBWF** Room motion sensor			
Type / WG01	**Detection** Presence + Motion	**Output** Presence + Motion	**Item No.**
RBWF			
RBWF-W	Yes / No (relay on / off)	Changeover contact	1401-41A0-4000-000

The motion sensor and presence detector **KIN**ASGARD® **ABWF** detects the presence of persons and motions. It is used to observe and recognise conditions and for motion-dependent control of room functions, e.g. as a motion detector to lower temperatures in unused rooms. The motion sensor is used in corridors, in outdoor areas, in industrial halls, in offices, residential rooms and business facilities. The sensor detects motions over an aperture angle of 110° and a perimeter of 360°. The patented lens system with 20 individual lenses results in only very small dark areas that are only a few centimetres wide even at a distance of 10 m, thereby reliably detecting small movements. The sensor recognizes changes in the infra-red radiation spectrum, so in heat radiation, resulting form the movement of persons or objects. Such movements generate a temporary change of the temperature gradient in the field. Due to the constant presence of body (heat) radiation, this sensor is ideally suitable for detecting persons. The temperature difference between sensor and object must be > 5 K.

ABWF



TECHNICAL DATA

Power supply:	24 V AC (± 20 %); 15...36 V DC
Power consumption:	< 1 W at 24 V DC; < 2 VA at 24 V AC
Sensor:	infra-red motion sensor (see beginning of this chapter)
Detection range:	perimeter 360°, aperture angle 90° / 110°, reach approx. 10 m, circular
Motion detection:	of persons and objects, required temperature difference between subject and surroundings ≥ 5 K
Output:	without / with motion + presence, potential-free changeover contact (24 V), 1 A ohmic load
After-running time:	adjustable from 4 s to 16 min
Ambient temperature:	–10...+50 °C
Electrical connection:	0.14 - 1.5 mm², via terminal screws
Enclosure:	plastic, UV-stabilised, material polyamide, 30 % glass-globe reinforced, with quick-locking screws (slotted / Phillips head combination), colour traffic white (similar to RAL 9016)
Enclosure dimensions:	72 x 64 x 37.8 mm (Tyr 1)
Cable gland:	M 16 x 1.5, including strain relief, exchangeable, max. inner diameter 10.4 mm
Installation:	on-wall
Protection class:	III (according to EN 60 730)
Protection type:	IP 65 (according to EN 60 529)
Standards:	CE conformity, electromagnetic compatibility according to EN 61 326, EMC directive 2014 / 30 / EU

Connecting diagram **ABWF**

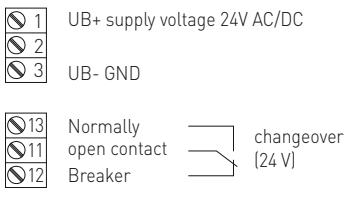

Dimensional drawing **ABWF**

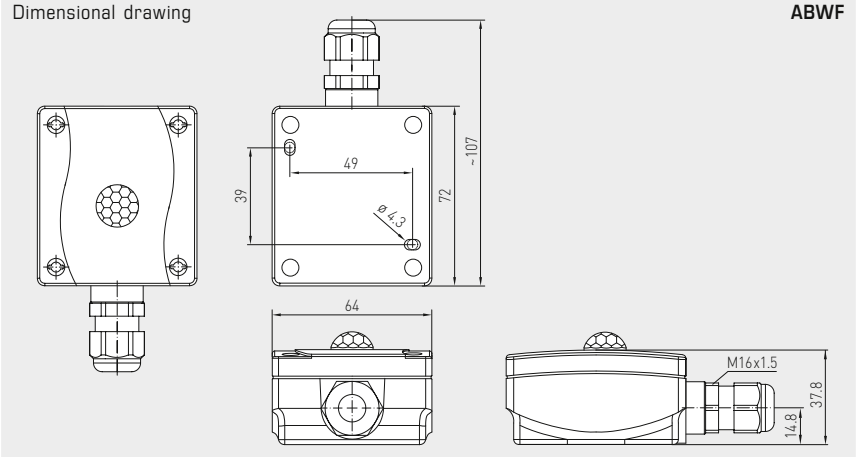

Schematic diagram **ABWF**

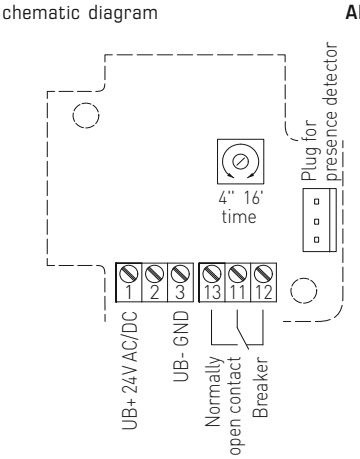

KINASGARD® ABWF	Outdoor motion sensor		
Type / WG01	**Detection** Presence + Motion	**Output** Presence + Motion	**Item No.**
ABWF			
ABWF-W	Yes / No (relay on / off)	Changeover contact	1401-1110-4000-000

KINASGARD® DBWF
KINASGARD® DBWF-C

In-ceiling motion sensor with switching output

S+S REGELTECHNIK

The in-ceiling motion sensor and presence detector **KIN**ASGARD® **DBWF / DBWF-C** detects the presence of persons and movements and has a switching contact as an output. It has been designed for monitoring and detecting statuses and for motion-dependent control of room functions, e.g. for lowering the temperature of unused rooms.
The in-ceiling motion sensor is used for installation in suspended ceilings in corridors, offices, as well as in residential and business facilities. The connecting head is pluggable for quick, easy mounting. The measuring transducer is accommodated in a separate enclosure.
The sensor detects motions over an aperture angle of 110° and a perimeter of 360°.
The patented lens system with 20 individual lenses results in only very small dark areas that are only a few centimetres wide even at a distance of 10 m, thereby reliably detecting small movements.

DBWF
DBWF-C
connecting head, pluggable



TECHNICAL DATA

Power supply:	24 V AC (± 20 %); 15...36 V DC
Power consumption:	< 1 W at 24 V DC; < 2 VA at 24 V AC
Sensor:	infra-red motion sensor (see beginning of this chapter)
Detection range:	perimeter 360°, aperture angle 90° / 110°, reach approx. 10 m, circular, at an installation height of approx. 3 m the sensor covers a detection radius (r) of approx. 3.4 m
Motion detection:	of persons and objects, necessary temperature difference between subject and surroundings ≥ 5 K
After-running time:	adjustable from 4 seconds to 16 minutes
Ambient temperature:	–10...+50 °C
Connecting head:	plastic, material polycarbonate (PC), colour white, **pluggable**
Connecting cable:	PVC, LiYY, 4 x 0.14 mm², cable length (KL) = approx. 2 m
Electrical connection:	0.14 - 1.5 mm² via terminal screws
Mounting (sensor):	in the suspended ceiling, ceiling cutout Ø = 30 mm, cover Ø = < 35 mm
Protection type (sensor):	IP 30 (according to EN 60 529)
Protection class (sensor):	III (according to EN 60 730)
Standards:	CE-conformity, electromagnetic compatibility according to EN 61 326, EMC Directive 2014 / 30 / EU

DBWF measuring transducer	
Output:	potential-free **changeover contact** (24 V), 1 A ohmic load
Enclosure:	plastic, UV-stabilised, material polyamide, 30 % glass-globe reinforced, with quick-locking screws (slotted / Phillips head combination), colour traffic white (similar to RAL 9016)
Enclosure dimensions:	72 x 64 x 37.8 mm (Tyr 1)
Cable gland:	M 16 x 1.5; including strain relief, exchangeable, max. inner diameter 10.4 mm
Protection type (enclosure):	IP 65 (according to EN 60 529)

DBWF-C measuring transducer	
Output:	potential-free **normally open contact**, signal relay, max. 24 V / 0.5 A
Enclosure:	plastic, material PVC, colour black
Enclosure dimensions:	55 x 20 x 15 mm (compact form)
Protection type (enclosure):	IP 20 (according to EN 60 529)

Schematic diagram **DBWF**

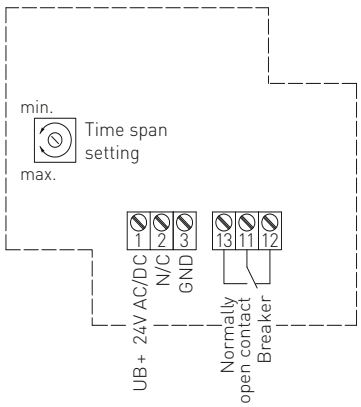

Schematic diagram **DBWF-C**

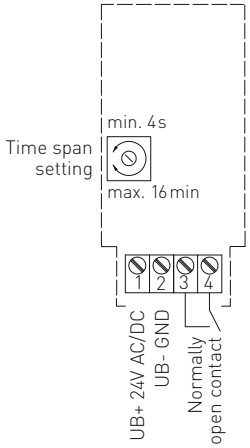

Connection diagram **DBWF**

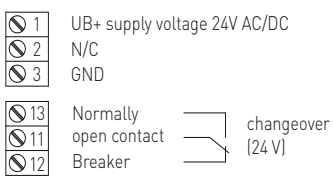

Connection diagram **DBWF-C**

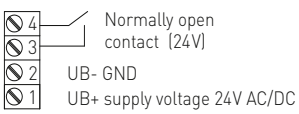

Dimensional drawing

DBWF

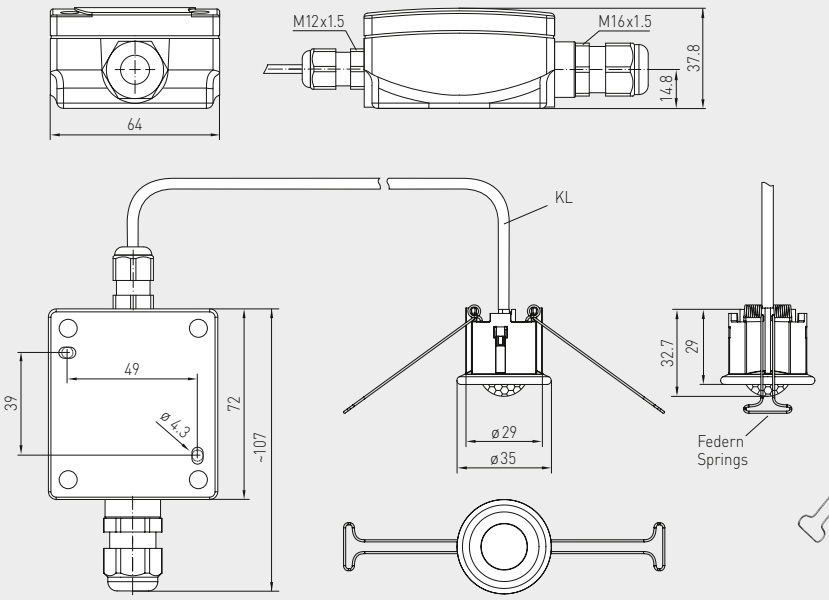

DBWF



Dimensional drawing

DBWF-C
compact form

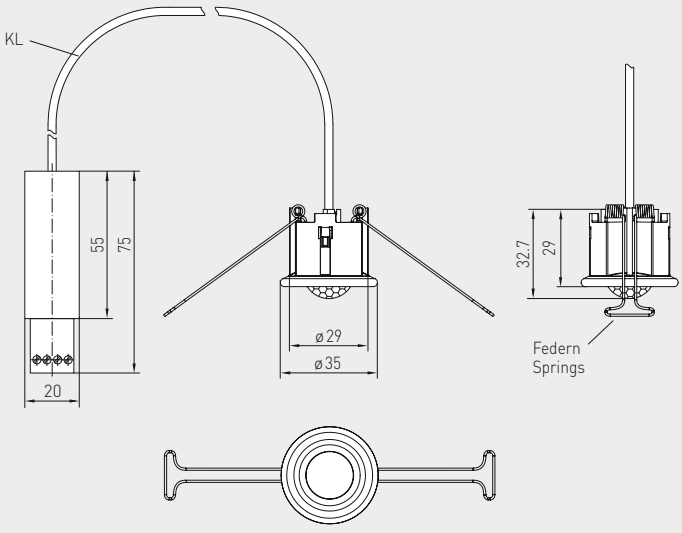

DBWF-C
compact form



KINASGARD® DBWF **KINASGARD® DBWF-C**	In-ceiling motion sensor In-ceiling motion sensor, compact form		
Type / WG01	**Detection** Presence + Movement	**Output** Presence + Movement	**Item no.**
DBWF			
DBWF-W	Yes / No (relay on / off)	Changeover contact	1401-6120-3000-000
DBWF-C			
DBWF-C	Yes / No (relay on / off)	Normally open contact	1401-6130-1000-006

S+S REGELTECHNIK

Room motion sensor and light sensor,
multisensors with active and switching output

The room motion and light sensor and presence detector **KIN**ASGARD® **RBWF-LF** is a combined instrument that detects motion and light intensity using a diffuser as well as the presence of persons and is used to recognize conditions. RBWF-LF issues a standard signal of 0 - 10 V or 4...20 mA for light intensity and has a switching (normally open contact) output for detecting motion.

This multi-sensor is used in building automation, in corridors, at workplaces, in industrial halls, in offices and business facilities for the control of lighting as needed, e.g. to control sunshade equipment, for daylight-dependant constant light control, for activating Venetian blinds or luminaries, for automatic energy conservation, and to avoid unnecessary heating-up or cooling of unoccupied rooms.

TECHNICAL DATA

Power supply:	24 V AC (± 20 %); 15...36 V DC for U variant 15...36 V DC for I variant, depending on working resistance, residual ripple stabilised ± 0.3 V
Working resistance:	R_a (ohm) = (U_b -14 V) / 0.02 A for I variant
Load resistance:	R_L > 5 kOhm for U variant
Power consumption:	< 1 W at 24 V DC; < 2 VA at 24 V AC
Sensor:	infra-red motion sensor and light sensor with diffuser (see beginning of this chapter)
Output, motion sensor:	without / with motion + presence, potential-free normally open contact (24 V), 1 A ohmic load
After-running time:	adjustable from 4 s to 16 min
Measuring ranges:	**multi-range switching** (via DIP switches) with 4 switchable measuring ranges **0...500 Lux / 1 kLux / 5 kLux / 20 kLux** (other individual ranges optional, e. g. 100 kLux)
Output, light sensor:	0 -10 V (linearised, active, 3-wire connection) or 4...20 mA
Deviation, light sensor:	typically < 5 % of final value
Ambient temperature:	0...+50 °C
Electrical connection:	0.14 - 1.5 mm², via terminal screws
Enclosure:	plastic, material ABS, colour pure white (similar to RAL 9010)
Dimensions:	85 x 85 x 27 mm (Baldur 1)
Installation:	wall mounting or on in-wall flush box, Ø 55 mm, base with 4-hole for mounting on vertically or horizontally installed in-wall flush boxes for cable entry from the back, with predetermined breaking point for on-wall cable entry from top / bottom in case of plain on-wall installation
Protection class:	III (according to EN 60 730)
Protection type:	IP 20 (according to EN 60 529)
Standards:	CE conformity, electromagnetic compatibility according to EN 61 326, EMC directive 2014 / 30 / EU

Measuring ranges (selectable)	DIP 1	DIP 2	DIP 3	DIP 4
0...500 Lux	**ON**	OFF	OFF	OFF
0... **1 kLux** (default)	OFF	**ON**	OFF	OFF
0... 5 kLux	OFF	OFF	**ON**	OFF
0... 20 kLux	OFF	OFF	OFF	**ON**

Schematic diagram **RBWF/LF**

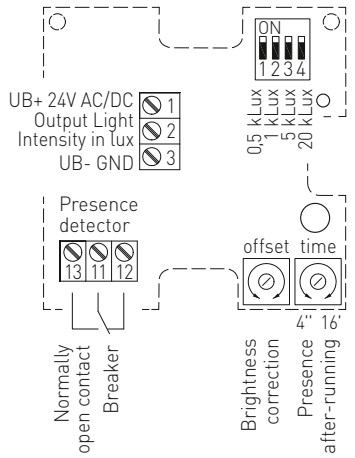

Connecting diagram **RBWF/LF-U**

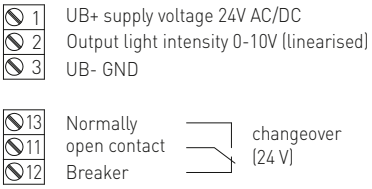

Connecting diagram **RBWF/LF-I**

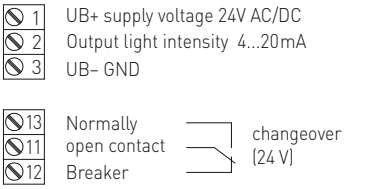

Dimensional drawing

Enclosure **Baldur 1**
RBWF/LF

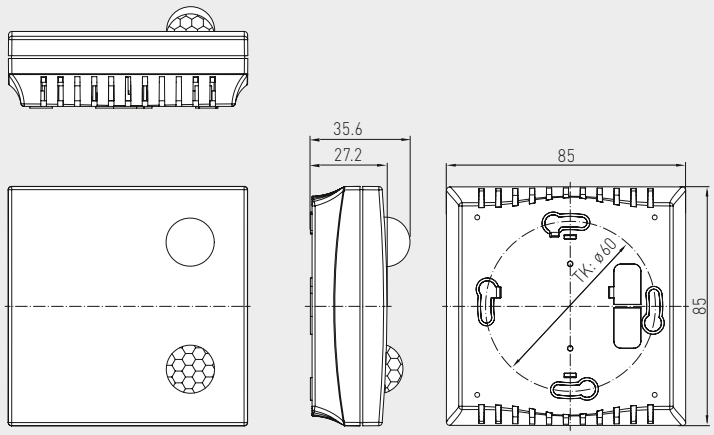

RBWF/LF



KINASGARD® RBWF/LF	Room motion sensor and light sensor		
Type / WG01	**Detection, Measuring Range**	**Output**	**Item No.**
RBWF-LF-U			
1. Presence + Motion	Yes / No (relay on / off)	Changeover contact	1401-41A1-1100-000
2. Light Intensity	0...500 Lux / 1 kLux / 5 kLux / 20 kLux	0 -10 V (linearisiert)	
RBWF-LF-I			
1. Presence + Motion	Yes / No (relay on / off)	Changeover contact	1401-41A1-3200-000
2. Light Intensity	0...500 Lux / 1 kLux / 5 kLux / 20 kLux	4...20 mA	
Extra charge:	Other individual measuring ranges optional, e. g. 100 kLux		on request

S+S REGELTECHNIK

**Outdoor motion sensor and light sensor,
multisensors with active and switching output**

The room motion and light sensor and presence detector **KIN**ASGARD® **ABWF / LF** is a combined instrument that detects motions and light intensity as well as the presence of persons and is used to recognize conditions. ABWF / LF issues a standard signal of 0 - 10 V or 4...20 mA for light intensity and has a switching (changeover contact) output for the detection of motions.

The motion sensor / presence detector detects the presence of persons and motions. It is used to monitor and recognise conditions and for motion-dependent control of room functions, e.g. as a motion detector to lower temperatures in unused rooms. The motion sensor is used in corridors, in outdoor areas, in industrial halls, in offices, residential rooms and business facilities.

The light intensity sensor / twilight sensor with six switchable measuring ranges (six devices in one) measures the luminous intensity and is used to control luminaries, lighting systems, Venetian blinds and canvas blinds, etc., to monitor lighting conditions at workplaces, in greenhouses, storage halls, workshops, corridors, in outdoor areas, in industrial halls, in offices as well as in residential and business facilities, for daylight-dependant constant light control, as light intensity or twilight sensor and to control sunshade equipment avoiding unnecessary heating-up of rooms.

TECHNICAL DATA

Power supply:	24 V AC (± 20 %); 15...36 V DC for U variant 15...36 V DC for I variant, depending on working resistance, residual ripple stabilised ± 0.3 V
Working resistance:	R_a (ohm) = (U_b -14 V) / 0.02 A for I variant
Load resistance:	R_L > 5 kOhm for U variant
Power consumption:	< 1 W at 24 V DC; < 2 VA at 24 V AC
Sensor:	infra-red motion sensor and light sensor (see beginning of this chapter)
Output, motion sensor:	without / with motion + presence, potential-free normally open contact (24 V), 1 A ohmic load
After-running time:	adjustable from 4 s to 16 min
Measuring ranges:	**multi-range switching** (via DIP switches) with 6 switchable measuring ranges **0...500 Lux / 1 kLux / 2 kLux / 5 kLux / 20 kLux / 60 kLux** (other individual ranges optional, e. g. 100 kLux)
Output:	0 -10 V (linearised, active, 3-wire connection) or 4...20 mA
Deviation, light sensor:	typically < 5 % of final value
Ambient temperature:	–10...+50 °C
Electrical connection:	0.14 - 1.5 mm², via terminal screws
Enclosure:	plastic, UV-stabilised, material polyamide, 30 % glass-globe reinforced, with quick-locking screws (slotted / Phillips head combination), colour traffic white (similar to RAL 9016)
Enclosure dimensions:	72 x 64 x 37.8 mm (Tyr 1)
Cable gland:	M 16 x 1.5, including strain relief, exchangeable, max. inner diameter 10.4 mm
Installation:	on-wall
Protection class:	III (according to EN 60 730)
Protection type:	IP 30 (according to EN 60 529)
Standards:	CE conformity, electromagnetic compatibility according to EN 61 326, EMC directive 2014 / 30 / EU

Measuring ranges (selectable)	DIP 1	DIP 2	DIP 3	DIP 4
0...500 Lux	OFF	OFF	OFF	–
0... 1 kLux	**ON**	OFF	OFF	–
0... 2 kLux	OFF	**ON**	OFF	–
0... 5 kLux	**ON**	**ON**	OFF	–
0... **20 kLux** (default)	OFF	OFF	**ON**	–
0... 60 kLux	**ON**	OFF	**ON**	–

Schematic diagram **ABWF/LF**

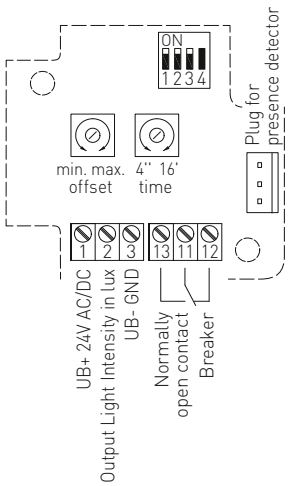

Connecting diagram **ABWF/LF-U**

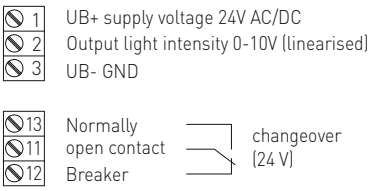

Connecting diagram **ABWF/LF-I**

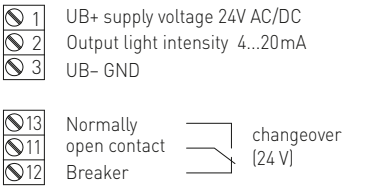

Dimensional drawing **ABWF/LF**

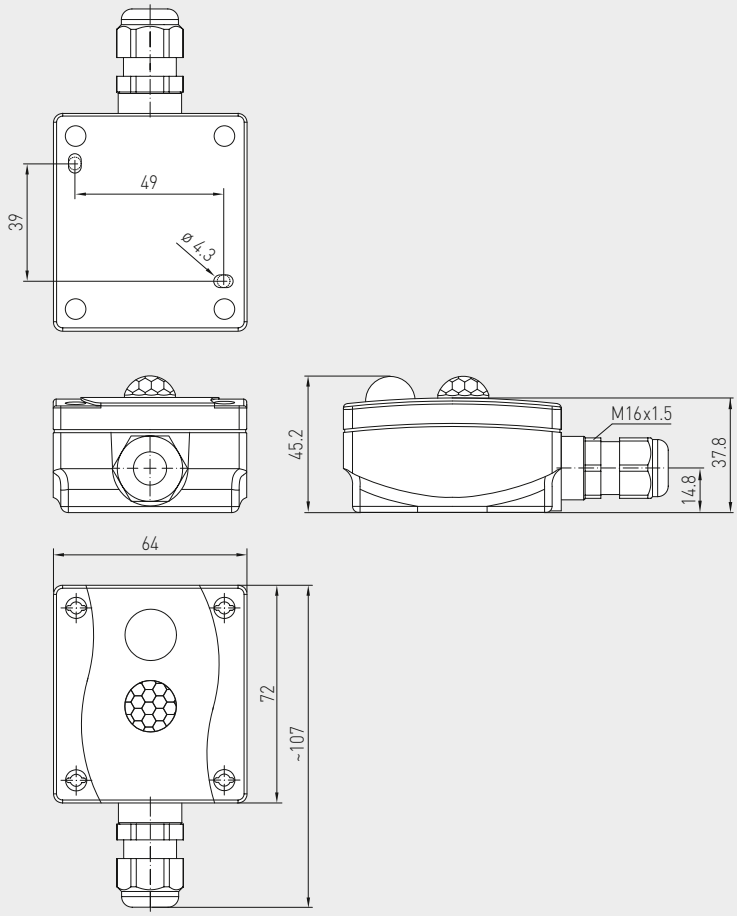

ABWF/LF



KINASGARD® ABWF/LF	Outdoor motion sensor and light sensor		
Type / WG01	**Detection, Measuring Range**	**Output**	**Item No.**
ABWF-LF-U			
1. Presence + Motion	Yes / No (relay on / off)	Changeover contact	1401-1111-2100-000
2. Light Intensity	0…500 Lux / 1 / 2 / 5 / 20 / 60 kLux	**0 – 10 V** (linearised)	
ABWF-LF-I			
1. Presence + Motion	Yes / No (relay on / off)	Changeover contact	1401-1111-3200-000
2. Light Intensity	0…500 Lux / 1 / 2 / 5 / 20 / 60 kLux	**4...20 mA** (linearised)	
Extra charge:	Other individual measuring ranges optional, e. g. 100 kLux		on request

KINASGARD® DBWF/LF/FTF

In-ceiling motion detector, light, humidity and temperature sensor, multisensors with switching output

S+S REGELTECHNIK

The in-ceiling sensor **KIN**ASGARD® **DBWF/ LF/ FTF** is used to detect persons within a distance of up to 10 meters and to measure luminous intensity or brightness, relative humidity and temperature. It has been designed for installation in suspended ceilings.

The sensor detects **motion** over an aperture angle of 110° and a perimeter of 360°. The patented lens system with 20 individual lenses results in only very small dark areas that are only a few centimetres wide even at a distance of 10 m, thereby reliably detecting small movements. If motion is detected, the potential-free relay output is switched. The hold time of the output, measured from the moment of the last detected movement, can be preset internally in the device via potentiometer within a range of 4 seconds to approx. 17 minutes.

For the **temperature and humidity**, an analogue output 0 - 10 V corresponding to 0...+50 °C or 0...100 % r. H. is available. Deviations due to the mounting position and location can be compensated internally using one offset regulator respectively.

For **luminous intensity or brightness** of 0...1000 lux or 0...5000 lux (selectable via DIP switches), an analogue output 0 - 10 V is also available. It is also possible to activate the motion output depending on brightness with the help of a jumper.

Fields of application for the DBWF / LF / FTF include residential room monitoring, automatic switching of lights, control technology, alarm technology, and motion-dependent control of room functions, e. g. for lowering the temperature in unused rooms.

TECHNICAL DATA

Power supply:	24 V AC / DC (half-wave rectification, read the instructions!)
Power consumption:	< 3.6 VA at 24 V DC
Electrical connection:	0.14 - 1.5 mm², via terminal screws
Outputs:	0 -10 V or inverted 10 - 0 V (selectable via DIP switches)
MOTION	
Sensor:	infra-red motion sensor (see beginning of this chapter)
Detection range:	perimeter 360°, aperture angle 90° / 110°, reach approx. 10 m, circular, at an installation height of approx. 3 m the sensor covers a detection radius (r) of approx. 3.4 m
Motion detection:	of persons and objects, necessary temperature difference between subject and surroundings ≥ 5 K
Output, motion sensor:	potential-free changeover contact, for switching safety extra-low voltage only, up to 1 A
After-running time:	adjustable from 4 s to 17 min
LIGHT INTENSITY	
Sensor:	light sensor with diffusor (see beginning of this chapter)
Measuring range, light sensor:	0...1000 lux / 0...5000 lux (selectable via DIP switches)
Output, light sensor:	0 - 10 V
Deviation, light sensor:	typically < ± 10 % of final value (referred to calibration reference source, approx. 5700 K)
Temperature drift:	< ± 5 % of final value / 10 K at +20 °C
HUMIDITY	
Measuring range, humidity:	0...100 % r.H. (output corresponding to 0 - 10 V)
Operating range, humidity:	10...95 % r.H. (non-precipitating air)
Deviation, humidity:	typically **± 3 % r.H.** (20...80 %); at +20 °C, otherwise ± 5 % r. H.
Output, humidity:	0 -10 V
TEMPERATURE	
Measuring range, temperature:	0...+50 °C (output corresponding to 0 - 10 V) other measuring ranges on request!
Operating range, temperature:	0...+50 °C
Deviation, temperature:	typically ± 0.8 K at +20 °C, under standard conditions
Output, temperature:	0 -10 V
Ambient temperature:	0...+50 °C
Storage temperature:	–20...+50 °C
Enclosure:	steel, white painted
Enclosure dimensions:	cover: Ø 90 mm, height of enclosure: 30 mm
Installation dimensions:	ceiling cutout: Ø 80 mm installation depth: < 45 mm (incl. connector system) on-wall protrusion: > 13 mm (motion sensor) > 20 mm (humidity sensor)
Sensor protection:	mounted inside ceiling installation housing
Protection class:	III (according to EN 60 730)
Protection type (enclosure):	IP 20 (according to EN 60 529)
Standards:	CE conformity, electromagnetic compatibility according to EN 61 326, EMC directive 2014 / 30 / EU

Function output (direction adjustable)	**DIP 1**
normal (default) 0 % = 0 V 100 % = 10 V	OFF
inverted 0 % = 10 V 100 % = 0 V	**ON**

Brightness (adjustable measuring range)	**DIP 3**
0... **1000 Lux** (default)	OFF
0... 5000 Lux	**ON**

Motion (mode selectable)	**DIP 4**
Motion mode (default) Motion detector is independent of threshold value	OFF
Auto mode If the set threshold value is not reached, the motion detector is active	**ON**

Schematic diagram **DBWF/LF/FTF**
Circuit board

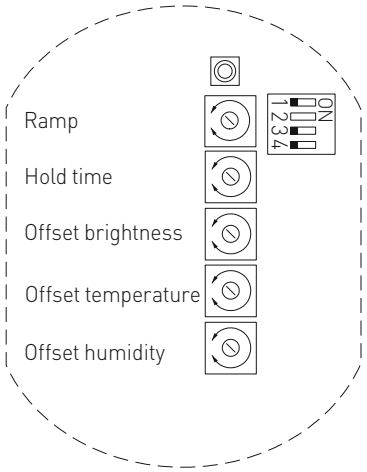

DIP switch 2 is not assigned!

Dimensional drawing **DBWF/LF/FTF**

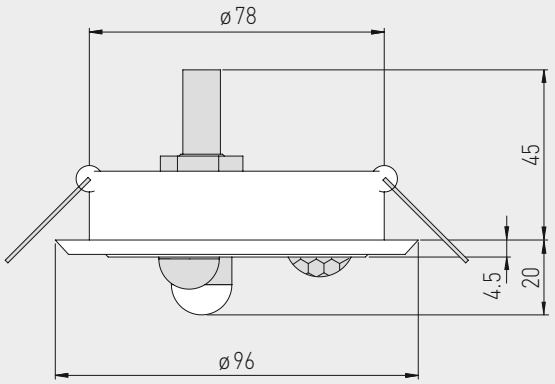

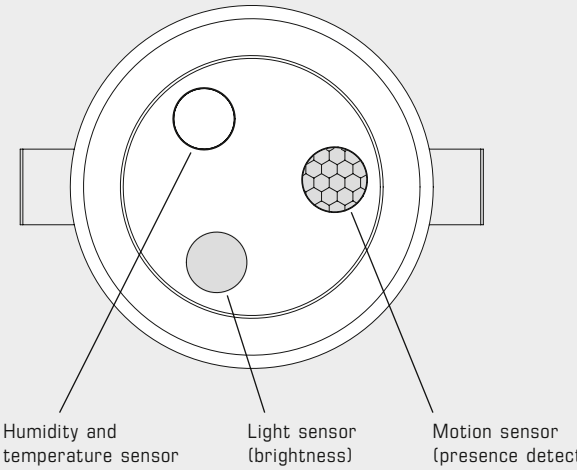

DBWF/LF/FTF





Connecting diagram
Rear side of enclosure **DBWF/LF/FTF**

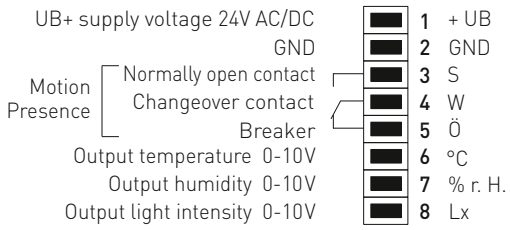

KINASGARD® DBWF/LF/FTF In-ceiling motion, light, temperature and humidity sensor			
Type / WG02	**Detection, Measuring Range**	**Output**	**Item No.**
DBWF-LF-FTF-W			
1. Presence + Motion	yes / no (relay on / off)	Changeover contact	1401-6114-3100-000
2. Light Intensity	0...1000 lux / 0...5000 lux (DIP)	0-10 V (linearised)	
3. Temperature	0 ... 50 °C	0 - 10 V	
4. Humidity	0...100 % r.H.	0 - 10 V	
Outputs: **0-10 V or inverted 10-0 V** (selectable via DIP switches)			



Air Quality & Flow

High CO_2 values and VOC loads are bad for energy bills and physical comfort. With **AER**ASGARD® air control and **RHE**ASGARD® flow sensors, you can efficiently monitor and control the quality of air on rooms. And our **RHE**ASREG® flow monitors and controllers make sure you stay in control of all air, gas and liquid lines.

APPLICATION RANGE

> Ventilation and air conditioning
> Ventilator flow monitoring, butterfly valves, heating registers and humidifiers
> Energy management
> Residential, working and conference rooms
> Movie theaters, showrooms and retail stores
> Institutes and laboratories



AERASGARD®, **RHE**ASGARD® & **RHE**ASREG®

394 – 441

CO_2 sensors

* with changeover contact

FSCO$_2$	In-wall CO_2 sensor	**413**
FSTM-CO$_2$	In-wall temperature and CO_2 sensor	**413**
RCO$_2$-SD	Room CO_2 sensor	**407**
RCO$_2$-W	Room CO_2 sensor	* **407**
RTM-CO$_2$-SD	Room temperature and CO_2 sensor	**411**
RFTM-CO$_2$-W	Room humidity, temperature and CO_2 sensor	* **411**
ACO$_2$-SD	On-wall CO_2 sensor	**415**
ACO$_2$-W	On-wall CO_2 sensor	* **415**
ATM-CO$_2$-SD	On-wall temperature and CO_2 sensor	**421**
AFTM-CO$_2$-W	On-wall humidity, temperature and CO_2 sensor	* **421**
KCO$_2$-SD	Duct CO_2 sensor	**429**
KCO$_2$-W	Duct CO_2 sensor	* **429**
KTM-CO$_2$-SD	Duct temperature and CO_2 sensor	**435**
KFTM-CO$_2$-W	Duct humidity, temperature and CO_2 sensor	* **435**

VOC sensors

* with changeover contact

RLQ-SD	Room air quality sensor	**403**
RLQ-W	Room air quality sensor	* **403**
KLQ-SD	Duct air quality sensor	**425**
KLQ-W	Duct air quality sensor	* **425**

VOC- and CO_2 sensors

* with changeover contact

RLQ-CO$_2$-W	Room air quality and CO_2 sensor	* **411**
RFTM-LQ-CO$_2$-W	Room humidity, temperature, air quality and CO_2 sensor	* **411**
ALQ-CO$_2$-W	On-wall air quality and CO_2 sensor	* **421**
AFTM-LQ-CO$_2$-W	On-wall humidity, temperature, air quality and CO_2 sensor	* **421**
KLQ-CO$_2$-W	Duct air quality and CO_2 sensor	* **435**
KFTM-LQ-CO$_2$-W	Duct humidity, temperature, air quality and CO_2 sensor	* **435**

Airflow monitors

KLGF	Duct air flow monitor	**437**
KLSW	Duct air flow monitor	**437**
SW	Flow monitor	**441**
WFS	Wind vane switch	**439**

Air Quality & Flow

AERASGARD®, **RHE**ASGARD® & **RHE**ASREG®
Multifunctional sensor technology for air quality and more

Broad Spectrum
Our active devices for measuring and regulating CO_2, mixed gases and flows are designed to be multifunctional. This reduces the diversity of types and expands their possible applications. Thanks to micro-processor technology, almost any measuring range can be represented, including custom specifications. DIP switches are used to select functions such as multi-range switching, automatic mode, and manual calibration.

Optimum Precision
The devices are tested according to the latest criteria. Take advantage of our experience, our development, manufacturing and product know-how and order these products directly from the manufacturer.

Approved Safety

RoHS conforming materials

ESD compliant manufacturing

CE compliance tested by external laboratories

Certified Quality

Our development and production in Nuremberg/Germany is certified by TÜV Thüringen according to DIN EN ISO 9001:2015.

GOST certificates

EAC certified

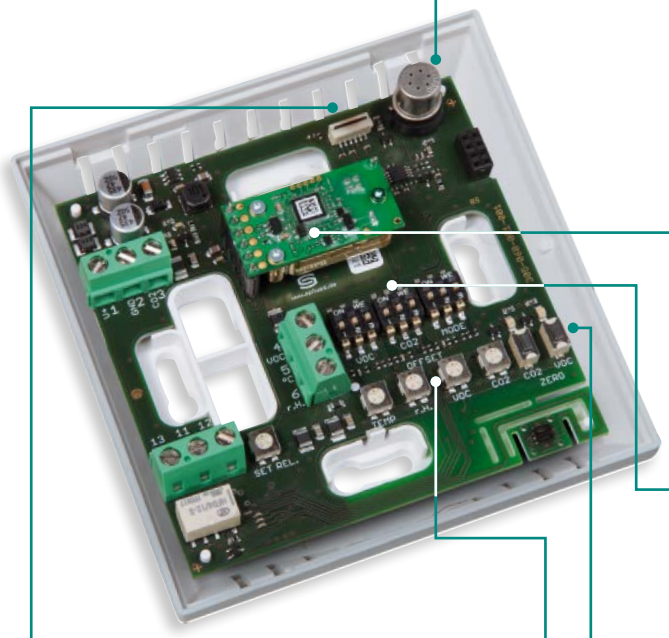

1



VOC Sensor

For mixed gases and air quality

2

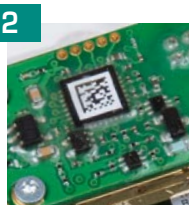

CO_2 Sensor

Calibration and balancing is done by means of the bus system in climate cabinets

3



DIP Switches

For individual adjustment of measuring ranges, output, automatic zero point and relay assignment

4



Trigger

For CO_2 or VOC zero point

6



Optional Display

With backlighting

5



Potentiometer

For setting the relay thresholds for CO_2 and VOC.
For setting the offsets for temperature, humidity, CO_2 and VOC



PLEUROFORM™

Multi-channel pipe for simultaneous measuring of CO_2 and VOC or gas pressure, with threaded end for receiving an additional screw-in humidity/temperature sensor

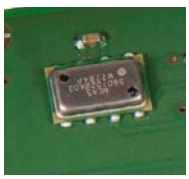

Air Pressure Compensation

Premium duct sensors with barometric air pressure compensation of CO_2 readings



Due to the increasing demands for accuracy, low maintenance, and long-term stability, we have further developed and improved our established switchable measuring system. The new generation of devices now includes two-beam measurement technology and atmospheric pressure compensation for CO_2 measurement.

Single-beam measurement method

The single-beam measurement method is particularly suitable for applications where the rooms to be monitored are periodically unoccupied. A prerequisite for reliable measurement results is a regular supply of fresh air – at least three times in seven days. This is the most frequent application.

Dual-beam measurement method

The dual-beam measurement method consists of a reference channel and a measuring channel. In this case, the reference channel operates in a spectrum that is not influenced by the CO_2 concentration of the medium. Ageing, soiling, and drifts affect both channels. With the help of these relationships, the phenomena mentioned can be largely offset without having to rely on a supply of fresh air. The dual-beam measurement method is always used if the application involved unusual circumstances – such as rooms that are in continuous use, 24 hours a day, 7 days a week.

Compensation

In building automation up to now, compensating for the influence of atmospheric pressure was neglected. Due to low- and high-pressure weather conditions and differing altitudes above sea level, barometric pressure variations of up to ± 100 mbar can apply. This can result in measurement errors of up to ± 16 % of the measured value in an uncompensated systems. Our new generation of devices features an integrated atmospheric pressure measurement that compensates CO_2 reading accordingly.

S+S Regeltechnik supplies measuring instruments for CO_2 or VOC measurement in various types of design and, in contrast to other manufacturers, combined devices for CO_2 **and** VOC measurement with separate sensors for both of these measurands in addition to several switchable measuring ranges.

The most important aspect of ventilation on an as-needed basis is the general room air quality, often also referred to as the "comfort zone". Aside from the generally known and accepted control variables, such as relative humidity and temperature, CO_2 and VOC concentrations in the air are also important parameters to be controlled. Each individual interprets room air and its quality differently.

For that reason, air quality can only be defined in rather general terms. The air must be perceived as pleasant by a majority of people and it must not lead to any discomfort. Air must not contain any hazardous concentrations of pollutants. In this respect, the opinions of persons entering the room are decisive. This is because they soon become accustomed to their surroundings and therefore to the various pollution burdens, which they then no longer notice. An important function of systems for energy-saving ventilation on an as-needed basis is to guarantee good room air quality.

Carbon dioxide

A measuring system based on NDIR (non-dispersive infra-red sensor) technology for CO_2 measurement consists of a light source and a receptor. A certain range of wavelengths of light radiated by the source is damped and absorbed by CO_2 molecules in the measured section. This damping is detected by the receptor.

In building automation applications, detection of the CO_2 content in air is primarily undertaken to control non-smoking rooms occupied by varying numbers of persons, such as conference rooms, break rooms, cinemas, schools, etc. Here, the increased CO_2 content caused by the presence of persons is interpreted as a "deterioration" of the air quality.

Over the last few years, a standard measuring range of 0...2000 ppm (parts per million) has become established for CO_2 measuring instruments. Although this measuring range covers the recommended maximum CO_2 concentrations for working and residential rooms (1000...1500 ppm), in practice however it became apparent that in many applications the measuring range of 2000 ppm does not suffice. Therefore, we have developed and launched a new generation of devices with switchable upper measuring range limits of 2000 ppm, 5000 ppm, and 10000 ppm.

Mixed gas VOC

VOC is the abbreviation for Volatile Organic Compounds. According to the definition by the World Health Organization WHO, VOC are organic substances with a boiling range from +60 to +250°C.

Examples of VOCs include compounds of the substance groups alkanes / alkenes, aromatic compounds, terpenes, halogenated hydrocarbons, esters, aldehydes, and ketones. There is a large number of naturally occurring VOCs, some of which are also released into the atmosphere in substantial quantities, e.g. terpenes and isoprene from forests.

Environmental pollution by VOC caused by human activities increased significantly throughout the last century. The biggest contributor is traffic, followed in second place by the construction sector with construction chemistry products such as coating compounds, adhesives, or sealing compounds. Potential sources of VOC in indoor spaces in addition to construction materials include furnishing objects, cleaning and care products, hobby and do-it-yourself products, office chemicals and, above all, tobacco smoke. An essential carrier of VOC is floor carpeting. Odour problems due to VOC can also be caused be microbes, or metabolic substances from bacteria and fungi.

It is precisely these types of substances mentioned and their increased occurrence that are ascertained. Since the air to be monitored contains a multitude of different substances to which the sensor reacts and since gas mixtures are forming, this sensor does not function selectively but reflects the overall air quality. Also the statement as to what constitutes "good air" or "bad air" cannot be definitively made, as this is an entirely subjective sensation. Ventilation is recommended starting from a value between 60 - 80 % VOC.

The sensor alters its conductivity depending on the concentration, the nature, and the mixture ratio of reducing molecules in ambient air.

CO_2 and / or VOC?

The above explanations demonstrate that there are applications for CO_2 measurement, for VOC measurement, but from our perspective, above all, for a combination of both measurands. The crucial factor in this respect is that both of these measurands are not convertible into each other and derivations to or from one another cannot be made. A NDIR CO_2 measuring instrument measures selectively and cannot detect any VOC, a VOC mixed gas sensor cannot recognize CO_2 molecules.

The new duct sensor featuring the Tyr 2 enclosure design with **PLEUROFORM**™ multi-channel pipe handles this separation perfectly, can record both CO_2 concentration as well as VOC mixed gas (or gas pressure) and, if necessary, can function as a genuine multifunctional device that delivers humidity and temperature data.

AERASGARD® RLQ-W
AERASGARD® RLQ-SD

Room air quality sensor (VOC) and measuring transducer, self-calibrating, with multi-range switching and active/switching output

S+S REGELTECHNIK

RLQ-W
RLQ-SD



The maintenance-free microprocessor-controlled room sensor **AER**ASGARD® **RLQ-SD** with automatic calibration (fixed) is used for determining the air quality based on a mixed gas sensor/VOC sensor. The measurement value is converted into standard signal of 0-10 V.

The maintenance-free microprocessor-controlled room sensor **AER**ASGARD® **RLQ-W** with automatic calibration (can be deactivated via DIP switches) is used for determining the air quality based on a mixed gas sensor/VOC sensor. The measurement value is converted into standard signal of 0-10 V or 4...20 mA. Optional with traffic light indicator (five coloured LEDs).

Elegant enclosure made of plastic, with snap-on lid, base with 4-hole attachment, for installation on vertically or horizontally installed flush-mounted boxes, with predetermined breaking point for surface-mounted connection or in enclosure made of stainless steel (top and bottom parts are stainless steel, the cover is screwed on), vandal-proof version e.g. for schools, barracks and public buildings.

It is used
- For air quality measurement in offices, hotels, meeting rooms and convention centres, apartments, stores, and restaurants, etc.
- For quantitative evaluation of room air pollution with contaminating gases (cigarette smoke, body perspiration, exhaled breathing air, solvent vapours, emissions from building members and cleaning agents)
- For adjustable sensitivity regarding the maximum air contamination to be expected
- For room ventilation as-needed, enabled by air changes only taking place when air is polluted while conserving energy at the same time.

The sensor's service life depends on the type of burden and gas concentration and is more than 60 months under normal load conditions. The new design allows you to choose between three sensitivity ranges that are adjusted using DIP switches, giving you three measuring ranges: LOW for low, MEDIUM (default) for medium, and HIGH for high VOC sensitivity. VOC is the abbreviation for volatile organic compounds. According to the definition by the World Health Organization WHO, VOC are organic substances with a boiling range from +60 to +250 °C. Examples of VOCs include compounds of the substance groups alkanes/alkenes, aromatic compounds, terpenes, halogenated hydrocarbons, esters, aldehydes, and ketones. There is a large number of naturally occurring VOCs, some of which are also released into the atmosphere in substantial quantities, e.g. terpenes and isoprene from forests. For more information, please refer to beginning of this chapter.

TECHNICAL DATA

Power supply:	24 V AC / DC (± 10 %)
Power consumption:	< 1.5 W / 24 V DC typical; < 2.9 VA / 24 V AC typical; peak current 200 mA
Sensor:	VOC sensor (metal oxide) (VOC = volatile organic compounds), with manual calibration (via zero button), **RLQ-SD** with automatic calibration (fixed) **RLQ-W** with automatic calibration (can be deactivated via DIP switches)
Measuring range:	0...100 % air quality; referred to calibrating gas; **multi-range switching** (selectable via DIP switches) VOC sensibility low, medium, high
Output:	(0 V = clean air, 10 V = polluted air) **RLQ-SD** 0-10 V (fixed) **RLQ-W** 0-10 V **or** 4...20 mA, working resistance < 800 Ω (selectable via DIP switches), with offset potentiometer (± 10 % of the measuring range)
Relay output:	**RLQ-SD** without changeover contact **RLQ-W** with potential-free **changeover contact** (24 V / 1 A) (switchpoint can be adjusted from 0...100 % of the output signal)
Measuring accuracy:	± 20 % of final value (referred to calibrating gas)
Service life:	> 60 months
Gas exchange:	by diffusion
Warm-up time:	approx. 1 hour
Ambient temperature:	0...+ 50 °C
Response time:	approx. 1 minute
Electrical connection:	0.14 - 1.5 mm², via screw terminals
Enclosure:	plastic, material ABS, colour pure white (similar to RAL 9010), stainless steel **V2A** (1.4301) enclosure optional
Dimensions:	85 x 85 x 27 mm (Baldur 1) 100 x 100 x 25 mm (stainless steel)
Installation:	wall mounting or on in-wall flush box, Ø 55 mm, base with 4-hole for mounting on vertically or horizontally installed in-wall flush boxes for cable entry from the back, with predetermined breaking point for on-wall cable entry from top / bottom in case of plain on-wall installation
Protection class:	III (according to EN 60 730)
Protection type:	IP 30 (according to EN 60 529)
Standards:	CE conformity, electromagnetic compatibility according to EN 61 326, EMC Directive 2014 / 30 / EU, Low Voltage Directive 2014 / 35 / EU
Optional:	**with traffic light indicator** (five coloured LEDs, see table) for displaying the air quality.

Dimensional drawing

RLQ-W
RLQ-SD

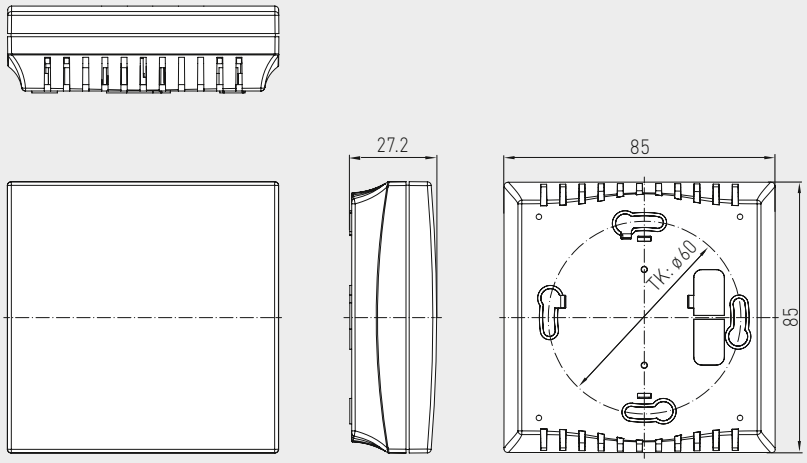

RLQ-W-A
with LEDs



Dimensional drawing

RLQ-W VA

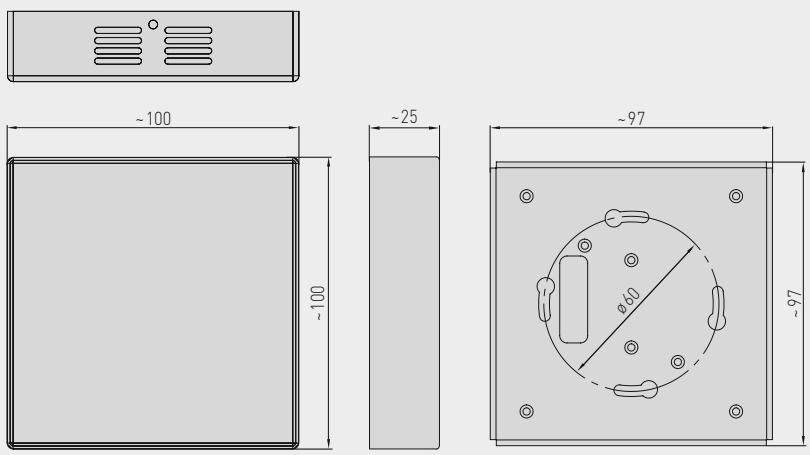

RLQ-W VA
(stainless steel enclosure)



AERASGARD® RLQ-W
AERASGARD® RLQ-SD

Room air quality sensor (VOC) and measuring transducer, self-calibrating, with multi-range switching and active/switching output

S+S REGELTECHNIK

Connecting diagram **RLQ-W**

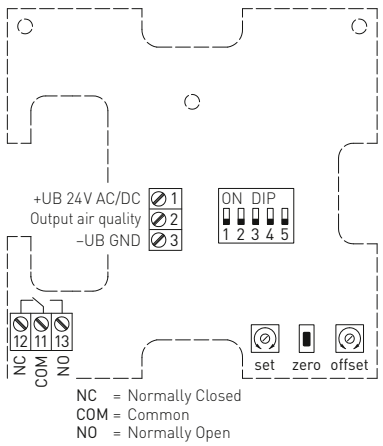

Connecting diagram **RLQ-SD**

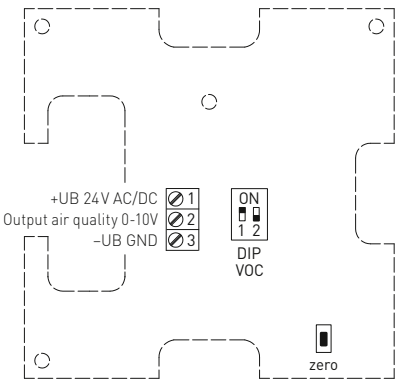

Schematic diagram **RLQ-W**

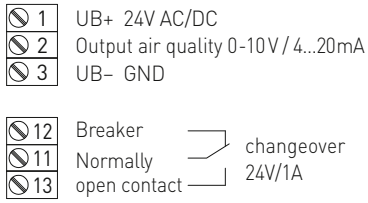

Schematic diagram **RLQ-SD**

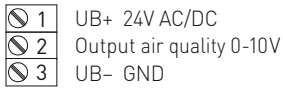

DIP switches		**RLQ-W**
VOC sensitivity	**DIP 1**	**DIP 2**
LOW	OFF	OFF
MEDIUM (default)	**ON**	OFF
HIGH	OFF	**ON**
VOC automatic zero point		**DIP 3**
deactivated		OFF
activated (default)		**ON**
Output		**DIP 4**
Voltage 0-10 V (default)		OFF
Current 4...20 mA		**ON**
Traffic light (5x LEDs)		**DIP 5**
deactivated		OFF
activated		**ON**

DIP switches		**RLQ-SD**
VOC sensitivity	**DIP 1**	**DIP 2**
LOW	OFF	OFF
MEDIUM (default)	**ON**	OFF
HIGH	OFF	**ON**

Traffic light indicator					RLQ-W-A
VOC content	**LED 1** green	**LED 2** green	**LED 3** yellow	**LED 4** yellow	**LED 5** red
0 %	25 %	–	–	–	–
5 %	50 %	–	–	–	–
10 %	75 %	–	–	–	–
15 %	**100 %**	–	–	–	–
20 %		25 %	–	–	–
25 %		50 %	–	–	–
30 %		75 %	–	–	–
35 %		**100 %**	–	–	–
40 %			25 %	–	–
45 %			50 %	–	–
50 %			75 %	–	–
55 %			**100 %**	–	–
60 %				25 %	–
65 %				50 %	–
70 %				75 %	–
75 %				**100 %**	–
80 %					25 %
85 %					50 %
90 %					75 %
95 %					**100 %**
100 %					

Once the aforementioned values have been reached, the respective LED becomes active (with increasing luminosity of 25 %, 50 %, 75 % and 100 %); LEDs that are already active continue to be illuminated.

RLQ-W-A
with LEDs



AERASGARD® RLQ-SD Room air quality sensor (VOC) and measuring transducer, *Standard*
AERASGARD® RLQ-W Room air quality sensor (VOC) and measuring transducer, *Premium*

Type / WG02	Measuring Range VOC	Output VOC	Equipment	Item No.
RLQ-SD		(fixed)		
RLQ-SD-U	0...100 %	0-10 V	–	1501-61C0-1001-200
RLQ-W		(switchable)		
RLQ-W	0...100 %	0-10 V / 4...20 mA	Changeover contact	1501-61C0-7301-200
RLQ-W VA	0...100 %	0-10 V / 4...20 mA	Changeover contact, stainless steel enclosure	1501-61C0-7301-205
RLQ-W-A		(switchable)		**with traffic light**
RLQ-W-A	0...100 %	0-10 V / 4...20 mA	Changeover contact, LEDs	1501-61C0-7331-200
	A = with "traffic light" (five coloured LEDs) for displaying the air quality (VOC).			
Note:	This unit **must not** be used as safety-relevant device!			

AERASGARD® RCO_2-W
AERASGARD® RCO_2-SD

Room CO_2 sensor and measuring transducer, self-calibrating, with multi-range switching and active/switching output

S+S REGELTECHNIK

The maintenance-free microprocessor-controlled room sensor **AER**ASGARD® **RCO_2-SD** with automatic calibration (fixed) is used for recording the CO_2 content of the air within a range of 0...2000 ppm. The measurement value is converted into standard signal of 0-10 V.

The maintenance-free microprocessor-controlled room sensor **AER**ASGARD® **RCO_2-W** with automatic calibration (can be deactivated via DIP switches) is used for detecting the CO_2 content of the air within a range of 0...2000 ppm or 0...5000 ppm. The measurement value is converted into standard signal of 0-10 V or 4...20 mA. Optional with traffic light indicator (five coloured LEDs).

Elegant enclosure made of plastic, with snap-on lid, based with 4-hole attachment, for installation on vertically or horizontally installed flush-mounted boxes, with predetermined breaking point for surface-mounted connection or in enclosure made of stainless steel (top and bottom parts are stainless steel, the cover is screwed on), vandal-proof version e.g. for schools, barracks and public buildings.

The CO_2 content of the air is measured using an optical NDIR sensor (non-dispersive infra-red technology). The detection range of the CO_2 sensor is calibrated for standard applications such as monitoring residential rooms and conference rooms. Room ventilation on an as-needed basis, improved well-being and customer benefit, increased comfort as well as reduced operating costs through energy conservation. For more information, see the start of the chapter!

TECHNICAL DATA

Power supply:	24 V AC / DC (± 10 %)
Power consumption:	< 1.5 W / 24 V DC typical; < 2.9 VA / 24 V AC typical; peak current 200 mA
Sensor:	Optical NDIR sensor (non-dispersive infra-red technology), with manual calibration (via zero button), **RCO_2-SD** with automatic calibration (fixed) **RCO_2-W** with automatic calibration (can be deactivated via DIP switches)
Measuring range:	**RCO_2-SD** 0...2000 ppm (fixed) **RCO_2-W** 0...2000 ppm **or** 0...5000 ppm (selectable via DIP switches)
Output:	**RCO_2-SD** 0-10 V (fixed) **RCO_2-W** 0-10 V **or** 4...20 mA, working resistance < 800 Ω (selectable via DIP switches), with offset potentiometer (± 10 % of the measuring range)
Relay output:	**RCO_2-SD** without changeover contact **RCO_2-W** with potential-free **changeover contact** (24 V / 1 A)
Measuring accuracy:	typically ± 30 ppm ± 3 % of measured value
Temperature dependence:	± 5 ppm / °C or ± 0.5 % of measured value / °C (whichever is higher)
Pressure dependence:	± 0.13 % / mm Hg
Long-term stability:	< 2 % in 15 years
Gas exchange:	by diffusion
Ambient temperature:	0...+ 50 °C
Warm up time:	approx. 1 hour
Response time:	< 2 minutes
Electrical connection:	0.14 - 1.5 mm^2, via screw terminals
Enclosure:	plastic, material ABS, colour pure white (similar to RAL 9010), stainless steel enclosure optional **V2A** (1.4301)
Dimensions:	85 x 85 x 27 mm (Baldur 1) 100 x 100 x 25 mm (stainless steel)
Installation:	wall mounting or on in-wall flush box, Ø 55 mm, base with 4-hole for mounting on vertically or horizontally installed in-wall flush boxes for cable entry from the back, with predetermined breaking point for on-wall cable entry from top / bottom in case of plain on-wall installation
Protection class:	III (according to EN 60 730)
Protection type:	IP 30 (according to EN 60 529)
Standards:	CE conformity, electromagnetic compatibility according to EN 61 326, EMC Directive 2014 / 30 / EU, Low Voltage Directive 2014 / 35 / EU
Optional:	**with traffic light indicator** (five coloured LEDs, see table) for displaying the CO_2 concentration **with display** (see **AER**ASGARD® **RFTM-LQ-CO_2**) for displaying the actual CO_2 content in ppm

Dimensional drawing

RCO_2-W
RCO_2-SD

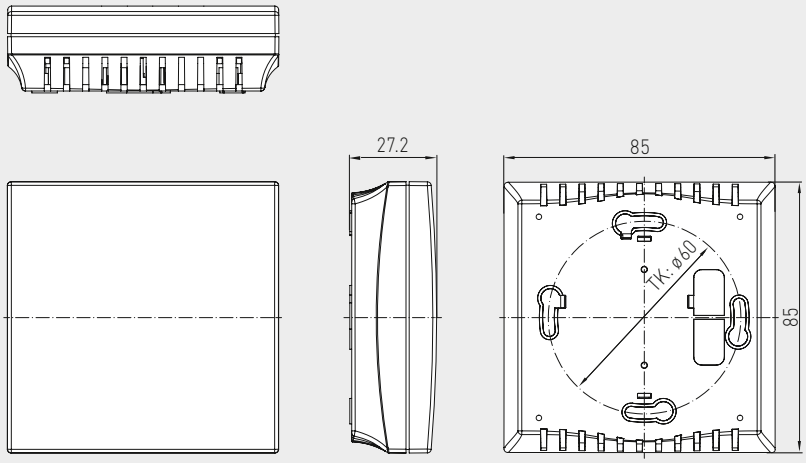

RCO_2-W
RCO_2-SD



Dimensional drawing

RCO_2-W VA

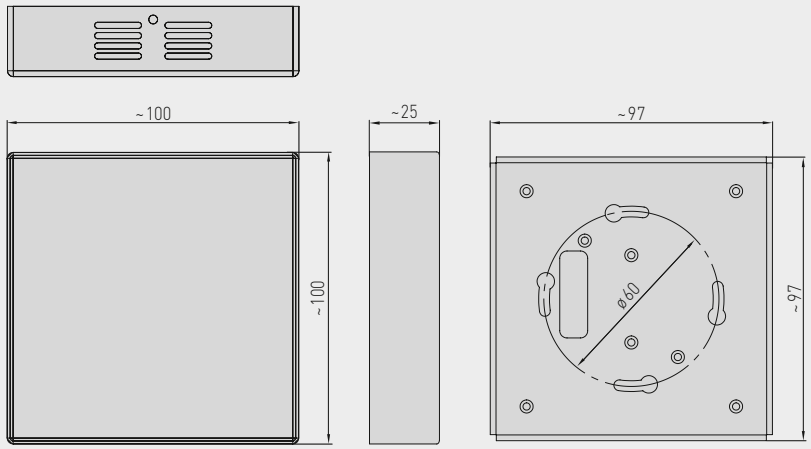

RCO_2-W VA
(stainless steel enclosure)



AERASGARD® RCO_2-W
AERASGARD® RCO_2-SD

Room CO_2 sensor and measuring transducer, self-calibrating, with multi-range switching and active/switching output

S+S REGELTECHNIK

Connecting diagram **RCO_2-W**

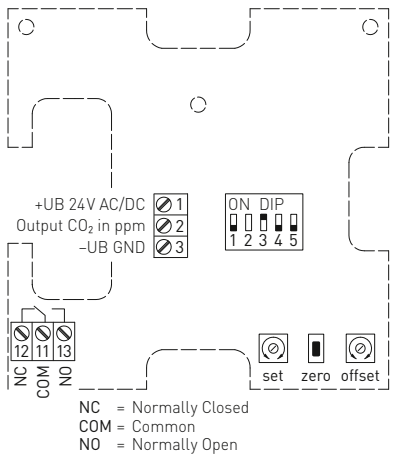

NC = Normally Closed
COM = Common
NO = Normally Open

Connecting diagram **RCO_2-SD**

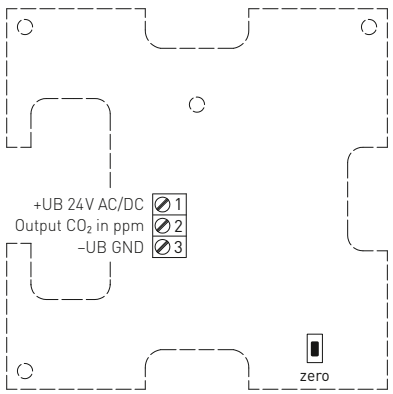

Schematic diagram **RCO_2-W**

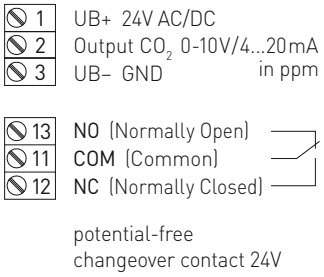

Schematic diagram **RCO_2-SD**

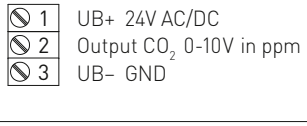

DIP switches	**RCO_2-W**
CO_2 content	**DIP 1**
0...2000 ppm (default)	OFF
0...5000 ppm	**ON**
CO_2 automatic zero point	**DIP 3**
deactivated	OFF
activated (default)	**ON**
Output	**DIP 4**
Voltage 0-10 V (default)	OFF
Current 4...20 mA	**ON**
Traffic light (5x LEDs)	**DIP 5**
deactivated	OFF
activated	**ON**
Note: **DIP 2** is not assigned!	

Traffic light indicator							RCO_2-W-A
CO_2 content in ppm 0...2000 ppm	0...5000 ppm	**LED 1** green	**LED 2** green	**LED 3** yellow	**LED 4** yellow	**LED 5** red	
–	350	50 %	–	–	–	–	
–	500	75 %	–	–	–	–	
350	**750**	**100 %**	–	–	–	–	
400	1000		25 %	–	–	–	
500	1250		50 %	–	–	–	
600	1500		75 %	–	–	–	
700	**1750**		**100 %**	–	–	–	
800	2000			25 %	–	–	
900	2250			50 %	–	–	
1000	2500			75 %	–	–	
1100	**2750**			**100 %**	–	–	
1200	3000				25 %	–	
1300	3250				50 %	–	
1400	3500				75 %	–	
1500	**3750**				**100 %**	–	
1600	4000					25 %	
1700	4250					50 %	
1800	4500					75 %	
1900	**4750**					**100 %**	
2000	5000						

Once the aforementioned values have been reached, the respective LED becomes active (with increasing luminosity of 25 %, 50 %, 75 % and 100 %); LEDs that are already active continue to be illuminated.

RCO_2-W-A
with LEDs



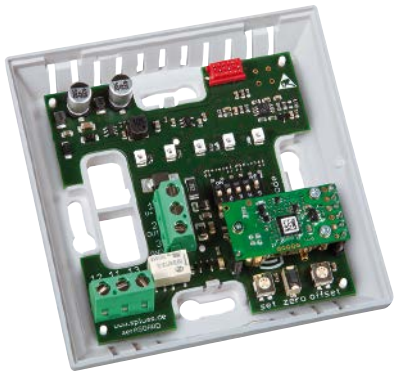

AERASGARD® RCO_2-SD Room CO_2 sensor and measuring transducer, *Standard*
AERASGARD® RCO_2-W Room CO_2 sensor and measuring transducer, *Premium*

Type / WG02	Measuring Range CO_2	Output CO_2	Equipment	Display	Item No. (Baldur 1)
RCO_2-SD	(fixed)	(fixed)			
RCO2-SD-U	0...2000 ppm	0-10 V	–		1501-61A0-1001-200
RCO_2-W	(switchable)	(switchable)			
RCO2-W	0...2000 ppm / 0...5000 ppm	0-10 V / 4...20 mA	Changeover contact		1501-61A0-7301-200
RCO2-W VA	0...2000 ppm / 0...5000 ppm	0-10 V / 4...20 mA	Changeover contact, stainless steel enclosure		1501-61A0-7301-205
RCO2-W DISPLAY	0...2000 ppm / 0...5000 ppm	0-10 V / 4...20 mA	Changeover contact, display	■	see **RFTM-LQ-CO_2**
RCO_2-W-A	(switchable)	(switchable)			**with traffic light**
RCO2-W-A	0...2000 ppm / 0...5000 ppm	0-10 V / 4...20 mA	Changeover contact, LEDs		1501-61A0-7331-200
	A = with "traffic light" (five coloured LEDs) for displaying the CO_2 concentration.				
Note:	This unit **must not** be used as safety-relevant device!				

AERASGARD® RCO_2-W / RLQ-CO_2-W
AERASGARD® RFTM-(LQ)-CO_2-W / RTM-CO_2-SD

Multifunctional room sensors and measuring transducers, for humidity, temperature, air quality (VOC) and CO_2 content, calibratable, with active/switching output

S+S REGELTECHNIK

The maintenance-free microprocessor-controlled room sensor **AER**ASGARD® **RTM-CO_2-SD** with automatic calibration (fixed) is used for detecting the CO_2 content of the air within a range of 0...2000 ppm and the temperature within a range of 0...+50°C. The measured values are converted into standard signals of 0-10 V.

The maintenance-free microprocessor-controlled room sensor **AER**ASGARD® **RFTM-LQ-CO_2-W** and **RCO_2-W / RLQ-CO_2-W** with automatic calibration (can be deactivated via DIP switches) is used for detecting the overall room climate. It measures CO_2 within a range of 0...2000 ppm or 0...5000 ppm, air quality (VOC) in one of three sensitivity levels that can be selected LOW / MEDIUM (default) / HIGH, temperature within a range of 0...+50°C as well as relative humidity of 0...100 % r.H. The measured values are converted into standard signals of 0-10 V oder 4...20 mA (selectable via DIP switches). As an option, the measured values can be shown continuously in the illuminated display.

Elegant enclosure made of plastic, with snap-on lid, base with 4-hole attachment, for installation on vertically or horizontally installed in-wall flush boxes, with predetermined breaking point for on-wall cable entry.

The relative humidity (% r.H.) quotient of water vapour partial pressure divided by the saturation vapour pressure at the respective gas temperature. A digital, long-term stable sensor used as measuring element for relative air humidity and temperature guarantees exact measurement results. The air quality is determined based on a (VOC) gas mixture sensor. The CO_2 content of the air is measured using an optical NDIR sensor (non-dispersive infra-red technology).

For more information, see the start of the chapter!

TECHNICAL DATA

Voltage supply:	24 V AC / DC (± 10 %)
Power consumption:	**RCO_2-W / RTM-CO_2-SD:** < 1.5 W / 24 V DC typical; < 2.9 VA / 24 V AC typical; peak current 200 mA **RLQ-CO_2-W / RFTM-LQ-CO_2-W:** < 4.4 W / 24 V DC typical; < 6.4 VA / 24 V AC typical; peak current 200 mA
Outputs:	**RTM-CO_2-SD** 0-10 V (fixed) **Rxx-CO_2-W** 0-10 V **or** 4...20 mA, working resistance < 800 Ω (selectable via DIP switches, selected variant applies for all outputs), with offset potentiometer (± 10 % of the measuring range)
Relay output:	**RTM-CO_2-SD** without changeover contact **Rxx-CO_2-W** with potential-free **changeover contact** (24 V / 1 A) (assignment selectable via DIP switches, switchpoint adjustable)
HUMIDITY	
Sensors:	**digital humidity sensor with integrated temperature sensor,** low hysteresis, high long-term stability
Measuring range, humidity:	0...100 % r. H.
Operating range, humidity:	0...95 % r. H. (without dew formation)
Deviation, humidity:	typically **± 2.0** % (20...80 % r. H.) at +25 °C, otherwise ± 3.0 %
Output, humidity:	0-10 V **or** 4...20 mA (selectable via DIP switches)
TEMPERATURE	
Measuring range, temperature:	0...+ 50 °C
Operating range, temperature:	0...+ 50 °C
Temperature deviation:	typically ± 0.2 K at +25 °C
Output, temperature:	**RTM-CO_2-SD** 0-10 V (fixed) **Rxx-CO_2-W** 0-10 V **or** 4...20 mA (selectable via DIP switches)
AIR QUALITY (VOC)	
Sensor, VOC:	VOC sensor (metal oxide) (VOC = volatile organic compounds), with manual calibration (via zero button) and with automatic calibration (can be deactivated via DIP switches)
Measuring range, VOC:	0...100 % air quality; referred to calibrating gas; **multi-range switching** (selectable via DIP switches) VOC sensitivity low, medium, high
Output, VOC:	0-10 V (0 V = clean air, 10 V = polluted air) **or** 4...20 mA (selectable via DIP switches, switchpoint can be adjusted from 0...100 % of the output signal)
Measuring accuracy, VOC:	± 20 % of final value (referred to calibrating gas)
Service life:	> 60 months (under normal load conditions)
CARBON DIOXIDE (CO_2)	
Sensor, CO_2:	optical NDIR sensor (non-dispersive infra-red technology), with manual calibration (via zero button), **RTM-CO_2-SD** with automatic calibration (fixed) **Rxx-CO_2-W** with automatic calibration (can be deactivated via DIP switches)
Measuring range, CO_2:	**RTM-CO_2-SD** 0...2000 ppm (fixed) **Rxx-CO_2-W** 0...2000 ppm **or** 0...5000 ppm (selectable via DIP switches)
Output, CO_2:	**RTM-CO_2-SD** 0-10 V (fixed) **Rxx-CO_2-W** 0-10 V **or** 4...20 mA (selectable via DIP switches)
Measuring accuracy, CO_2:	typically ± 30 ppm ± 3 % of measured value
Temperature dependence, CO_2:	± 5 ppm / °C or ± 0.5 % of measured value / °C (whichever is higher)

(continued on next page!)

AERASGARD® RCO_2-W / RLQ-CO_2-W
AERASGARD® RFTM-(LQ)-CO_2-W / RTM-CO_2-SD

Multifunctional room sensors and measuring transducers, for humidity, temperature, air quality (VOC) and CO_2 content, calibratable, with active/switching output

Dimensional drawing

RCO_2-W with display
RLQ-CO_2-W
RFTM-LQ-CO_2-W
RTM-CO_2-SD

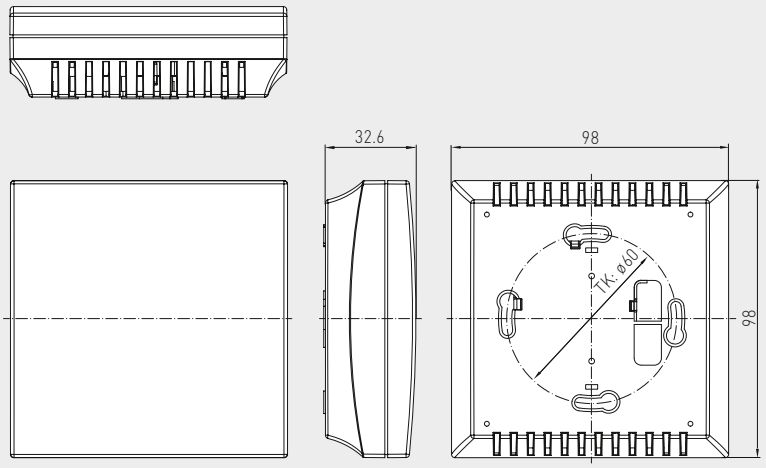

RLQ-CO_2-W
RFTM-LQ-CO_2-W
RTM-CO_2-SD



Dimensional drawing

Stainless steel enclosure
(See picture on next page)

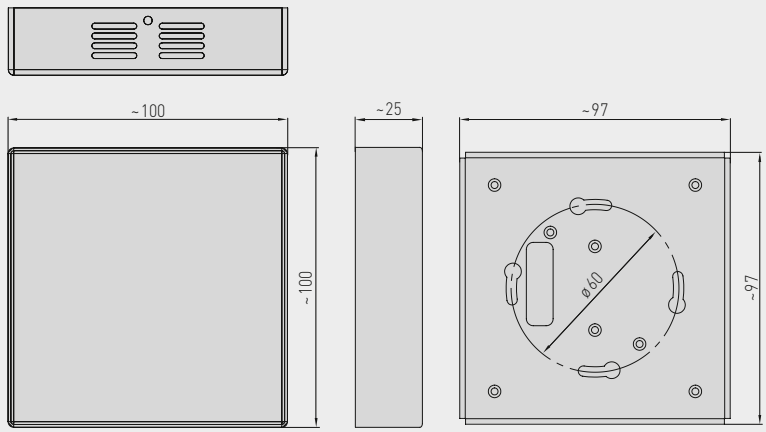

RCO_2-W
RLQ-CO_2-W
RFTM-LQ-CO_2-W
without display



TECHNICAL DATA (continued)

Pressure dependence:	± 0.13 % / mm Hg
Long-term stability:	< 2 % in 15 years
Gas exchange:	by diffusion
Ambient temperature:	0...+ 50 °C
Warm up time:	approx. 1 hour
Response time:	< 2 minutes
Electrical connection:	0.14 - 1.5 mm², via screw terminals
Enclosure:	plastic, material ABS, colour pure white (similar to RAL 9010), stainless steel **V2A** (1.4301) enclosure optional
Dimensions:	98 x 98 x 33 mm (Baldur 2)
Installation:	wall mounting or on in-wall flush box, Ø 55 mm, base with 4 holes, for attachment to vertically or horizontally installed in-wall flush boxes for rear cable entry, with predetermined breaking point for cable entry from top / bottom in case of plain on-wall installation
Protection class:	III (according to EN 60 730)
Protection type:	IP 30 (according to EN 60 529)
Standards:	CE conformity, electromagnetic compatibility according to EN 61 326, EMC Directive 2014 / 30 / EU, Low Voltage Directive 2014 / 35 / EU
Optional:	**display with illumination,** two line, cutout approx. 36 x 15 mm (W x H), for displaying actual humidity, actual temperature, air quality and / or the actual CO_2 content

AERASGARD® RCO_2-W / RLQ-CO_2-W
AERASGARD® RFTM-(LQ)-CO_2-W / RTM-CO_2-SD

Multifunctional room sensors and measuring transducers, for humidity, temperature, air quality (VOC) and CO_2 content, calibratable, with active/switching output

S+S REGELTECHNIK

Schematic diagram **RFTM-LQ-CO_2-W**

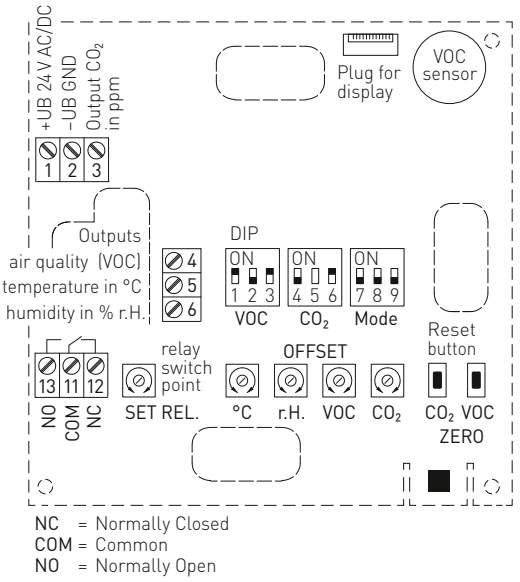

NC = Normally Closed
COM = Common
NO = Normally Open

Schematic diagram **RTM-CO_2-SD**

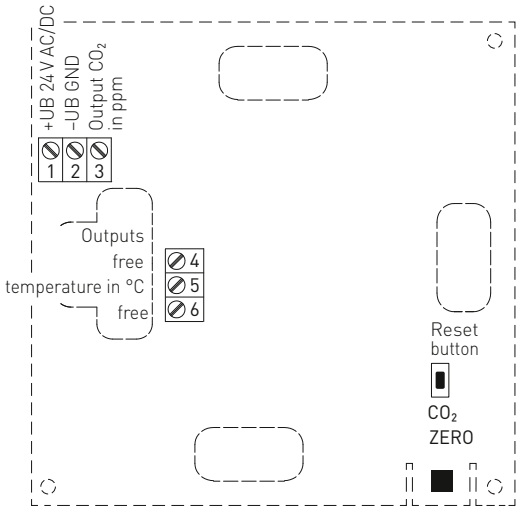

DIP switches	RFTM-LQ-CO_2-W	
VOC sensitivity	**DIP 1**	**DIP 2**
LOW	OFF	OFF
MEDIUM (default)	**ON**	OFF
HIGH	OFF	**ON**
VOC automatic zero point		**DIP 3**
deactivated		OFF
activated (default)		**ON**
CO_2 content		**DIP 4**
0...2000 ppm (default)		OFF
0...5000 ppm		**ON**
CO_2 automatic zero point		**DIP 6**
deactivated		OFF
activated (default)		**ON**
Relay assignment	**DIP 7**	**DIP 8**
CO_2 (default): 600...1900 ppm / 900...4700 ppm	OFF	OFF
VOC: 10...95 %	**ON**	OFF
Temperature: +5...+48 °C	OFF	**ON**
Humidity: 10...95% r.H.	**ON**	**ON**
Output		**DIP 9**
Voltage 0-10 V (default)		OFF
Current 4...20 mA		**ON**
Note: **DIP 5** is not assigned!		

RFTM-LQ-CO_2-W
(Baldur 2)



Stainless steel enclosure
(optionally available upon request)



Humidity table
MR: 0...100 % r. H.

% r.H.	U_A in V	I_A in mA	% r.H.	U_A in V	I_A in mA
0	0	4.0	**50**	5.0	12.0
5	0.5	4.8	**55**	5.5	12.8
10	1.0	5.6	**60**	6.0	13.6
15	1.5	6.4	**65**	6.5	14.4
20	2.0	7.2	**70**	7.0	15.2
25	2.5	8.0	**75**	7.5	16.0
30	3.0	8.8	**80**	8.0	16.8
35	3.5	9.6	**85**	8.5	17.6
40	4.0	10.4	**90**	9.0	18.4
45	4.5	11.2	**95**	9.5	19.2
Continued at the right ...			**100**	10.0	20.0

Temperature table
MR: 0...+50 °C

°C	U_A in V	I_A in mA
0	0	4.0
5	1.0	5.6
10	2.0	7.2
15	3.0	8.8
20	4.0	10.4
25	5.0	12.0
30	6.0	13.6
35	7.0	15.2
40	8.0	16.8
45	9.0	18.4
50	10.0	20.0

AERASGARD® RTM-CO_2-SD	Room temperature and CO_2 sensor, *Standard*
AERASGARD® RCO2-W	Room CO_2 sensor, *Premium*
AERASGARD® RLQ-CO_2-W	Room air quality (VOC) and CO_2 sensor, *Premium*
AERASGARD® RFTM-CO_2-W	Multifunctional room sensor for humidity, temperature and CO_2 content, *Deluxe*
AERASGARD® RFTM-LQ-CO_2-W	Multifunctional room sensor for humidity, temperature, CO_2 content and air quality (VOC), *Deluxe*

Type / WG02	Measuring Range Humidity	Temperature	CO_2	VOC	Equipment Display	Item No. (Baldur 2)
RTM-CO_2-SD			(fixed)			
RTM-CO2-SD-U	–	0...+50 °C	0...2000 ppm	–	–	1501-61B2-1001-200
RCO2-W			(switchable)			
RCO2-W (without display)	–	–	0...2000 / 5000 ppm	–	W	see **RCO2-W / RCO2-SD**
RCO2-W-DISPLAY	–	–	0...2000 / 5000 ppm	–	W ■	1501-61B0-7321-200
RLQ-CO_2-W			(switchable)			
RLQ-CO2-W	–	–	0...2000 / 5000 ppm	0...100 %	W	1501-61B1-7301-200
RLQ-CO2-W DISPLAY	–	–	0...2000 / 5000 ppm	0...100 %	W ■	1501-61B1-7321-200
RFTM-CO_2-W			(switchable)			
RFTM-CO2-W	0...100 % r.H.	0...+50 °C	0...2000 / 5000 ppm	–	W	1501-61B6-7301-200
RFTM-CO2-W DISPLAY	0...100 % r.H.	0...+50 °C	0...2000 / 5000 ppm	–	W ■	1501-61B6-7321-200
RFTM-LQ-CO_2-W			(switchable)			
RFTM-LQ-CO2-W	0...100 % r.H.	0...+50 °C	0...2000 / 5000 ppm	0...100 %	W	1501-61B8-7301-200
RFTM-LQ-CO2-W DISPLAY	0...100 % r.H.	0...+50 °C	0...2000 / 5000 ppm	0...100 %	W ■	1501-61B8-7321-200
Outputs:	**0-10 V or 4...20 mA** (selectable via DIP switches, selected variant applies for all outputs) – *Standard* room sensor **RTM-CO_2-SD** with fixed output 0-10 V!					
Equipment:	**W = changeover contact** – *Standard* room sensor **RTM-CO_2-SD** without changeover contact!					
Note:	This unit **must not** be used as safety-relevant device!					

AERASGARD® $FSCO_2$
AERASGARD® $FSTM\text{-}CO_2$

Room CO_2 and temperature sensor or measuring transducer, in-wall in the panel switch programme, with active output

NEW

S+S REGELTECHNIK

The room sensor **AER**ASGARD® **$FSCO_2$ / $FSTM\text{-}CO_2$** in the in-wall enclosure is used for measuring the CO_2 content and temperature of the air. It converts the measured values into a standard signal of 0-10 V.

The CO_2 content of the air is measured using an optical NDIR sensor (non-dispersive infra-red technology). A digital, long-term stable sensor is used for temperature measurement.

The in-wall sensor is mounted in high-quality panel switch programmes, ideally of the brands Gira, Berker, Merten, Jung, Siemens or Busch-Jaeger (using in-wall adapters) either individually or in combination with light switches, socket outlets, etc.

It is used in non-aggressive, dust-free environments, in refrigeration, air conditioning and clean room technology, and in interior rooms, such as living rooms, offices, hotels, etc.

Mounting diagram **in-wall**

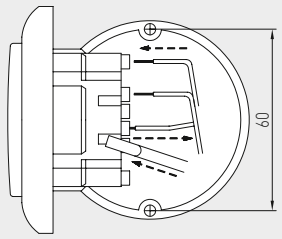

TECHNICAL DATA

Power supply:	24 V AC / DC (± 10 %)
Power consumption:	< 1.5 W / 24 V DC; < 2.9 VA / 24 V AC
CARBON DIOXIDE (CO_2)	
Sensor, CO_2:	**optical NDIR sensor** (non-dispersive infra-red technology), with manual calibration (via zero button) and automatic calibration (fixed)
Long-term stability:	< 2 % in 15 years
Measuring range, CO_2:	0...2000 ppm
Output, CO_2:	0-10 V
Measuring accuracy, CO_2:	typically ± 30 ppm ± 3 % of measured value
Temperature dependence, CO_2:	± 5 ppm / °C or ± 0.5 % of measured value / °C (whichever is higher)
Pressure dependence:	± 0.13 % / mm Hg
Gas exchange:	by diffusion
Warm up time:	approx. 1 hour
Response time:	< 2 minutes
TEMPERATURE	
Sensor:	**digital temperature sensor,** low hysteresis, high long-term stability
Long-term stability:	± 1 % per year
Measuring range:	0...+50 °C
Deviation, temperature:	typically ± 0.8 K at +25 °C
Output, temperature:	0-10 V
Mounting:	in-wall flush box Ø 55 mm
Electrical connection:	0.14 - 1.5 mm², via screw terminals
Ambient temperature:	Storage –35...+85 °C; Operation 0...+50 °C
Permitted humidity:	max. 90 % r.H., non-precipitating air
Medium:	clean air and other non-aggressive, non-combustible gases
Protection class:	III (according to EN 60 730)
Protection type:	IP 20 (according to 60 529)
Standards:	CE-conformity, electromagnetic compatibility according to EN 61 326, EMC Directive 2014 / 30 / EU
SWITCH PROGRAMME	
Manufacturer:	GIRA System 55 (other switch programmes, manufacturers, colours as well as prices available upon request)
Enclosure:	plastic, the standard colour is pure glossy white (similar to RAL 9010) (other colours are available upon request with colour variants depending on the respective light switch programme)

Connection diagram **$FSCO_2$**

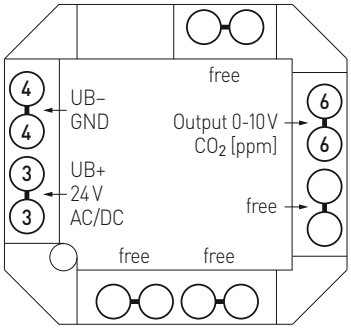

Connection diagram **$FSTM\text{-}CO_2$**

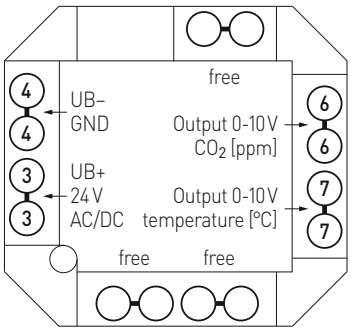

Dimensional drawing

$FSCO_2$
$FSTM\text{-}CO_2$

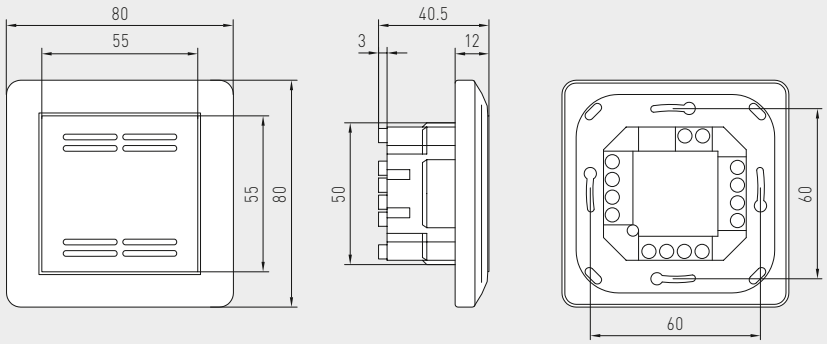

$FSCO_2$
$FSTM\text{-}CO_2$



CO_2 content table
MR: 0...2000 ppm

ppm	U_A [V]	ppm	U_A [V]
0	0.00	**1000**	5.0
350	1.75	**1100**	5.5
400	2.00	**1200**	6.0
450	2.25	**1300**	6.5
500	2.50	**1400**	7.0
550	2.75	**1500**	7.5
600	3.00	**1600**	8.0
700	3.50	**1700**	8.5
800	4.00	**1800**	9.0
900	4.50	**1900**	9.5
Continued to the right ...		**2000**	10.0

Temperature table
MR: 0...+50 °C

°C	U_A [V]
0	0.0
5	1.0
10	2.0
15	3.0
20	4.0
25	5.0
30	6.0
35	7.0
40	8.0
45	9.0
50	10.0

AERASGARD® $FSCO_2$ Room CO_2 sensor or measuring transducer, in-wall
AERASGARD® $FSTM\text{-}CO_2$ Room temperature and CO_2 sensor or measuring transducer, in-wall

Type / WG02	Measuring Range CO_2	Measuring Range Temperature	Output CO_2	Output Temperature	Item No.
$FSCO_2$					
FSCO2-U	0...2000 ppm	–	0-10 V	–	1501-9120-1001-162
$FSTM\text{-}CO_2$					
FSTM-CO2-U	0...2000 ppm	0...+50 °C	0-10 V	0-10 V	1501-9122-1001-162

AERASGARD® ACO_2-W
AERASGARD® ACO_2-SD

On-wall CO_2 sensor and measuring transducer, self-calibrating, with multi-range switching and active / switching output

S+S REGELTECHNIK

The maintenance-free microprocessor-controlled on-wall sensor **AER**ASGARD® **ACO_2-SD** with automatic calibration (fixed) is used for detecting the CO_2 content of the air within a range of 0...2000 ppm or 0...5000 ppm. The measurement value is converted into standard signal of 0-10 V.

The maintenance-free microprocessor-controlled on-wall sensor **AER**ASGARD® **ACO_2-W** with automatic calibration (can be deactivated via DIP switches) is used for detecting the CO_2 content of the air within a range of 0...2000 ppm or 0...5000 ppm. The measurement value is converted into standard signal of 0-10 V or 4...20 mA.

The CO_2 content of the air is measured using an optical NDIR sensor (non-dispersive infra-red technology). The detection range of the CO_2 sensor is calibrated for standard applications such as monitoring residential rooms and conference rooms. Room ventilation on an as-needed basis, improved well-being and customer benefit, increased comfort as well as reduced operating costs through energy conservation are just some of the benefits of employing AERASGARD® CO_2 sensors.

A measuring system based on NDIR (non-dispersive infra-red technology) for CO_2 measurement consists of a light source and a receptor. A certain range of wavelengths of light radiated by the source is damped and absorbed by CO_2 molecules in the measured section. This damping is detected by the receptor.

For more information, see the start of the chapter.

TECHNICAL DATA

Power supply:	24 V AC / DC (± 10 %)
Power consumption:	< 1.5 W / 24 V DC typical; < 2.9 VA / 24 V AC typical; Peak current 200 mA
Sensor:	optical NDIR sensor (non-dispersive infra-red technology), with manual calibration (via zero button), **ACO_2-SD** with automatic calibration (fixed) **ACO_2-W** with automatic calibration (can be deactivated via DIP switches)
Measuring range:	**Multi-range switching** (selectable via DIP switches) 0...2000 ppm; 0...5000 ppm
Output:	**ACO_2-SD** 0-10 V (fixed) **ACO_2-W** 0-10 V **or** 4...20 mA, working resistance < 800 Ω (selectable via DIP switches), with offset potentiometer (± 10 % of the measuring range)
Relay output:	**ACO_2-SD** without changeover contact **ACO_2-W** with potential-free **changeover contact** (24 V / 1 A), switchpoint adjustable
Measuring accuracy:	typically ± 30 ppm ± 3 % of measured value
Temperature dependence:	± 5 ppm / °C or ± 0.5 % of measured value / °C (whichever is higher)
Pressure dependence:	± 0.13 % / mm Hg
Long-term stability:	< 2 % in 15 years
Gas exchange:	by diffusion
Warm up time:	approx. 1 hour
Ambient temperature:	–10...+60 °C
Response time:	approx. 1 minute
Electrical connection:	0.14 - 1.5 mm², via screw terminals
Enclosure:	plastic, UV-stabilised, material polyamide, 30 % glass-globe reinforced, with quick-locking screws (slotted / Phillips head combination), colour traffic white (similar to RAL 9016)
Enclosure dimensions:	126 x 90 x 50 mm (Tyr 2)
Cable gland:	M 16 x 1.5; including strain relief, exchangeable
Process connection:	by screws
Protection class:	III (according to EN 60 730)
Protection type:	IP 65 (according to EN 60 529)
Standards:	CE conformity, electromagnetic compatibility according to EN 61 326, EMC Directive 2014 / 30 / EU
Optional:	**with display** (see **AER**ASGARD® **AFTM-LQ-CO_2**) for displaying the actual CO_2 content in ppm
ACCESSORIES	
WS-03	Weather and sun protection hood, 200 x 180 x 150 mm, stainless steel **V2A** (1.4301)

Schematic diagram **ACO_2-SD**

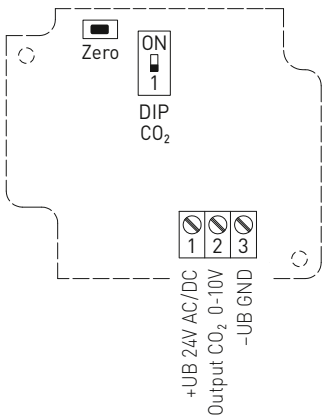

Connecting diagram **ACO_2-SD**

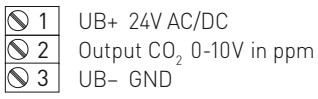

Schematic diagram **ACO_2-W**

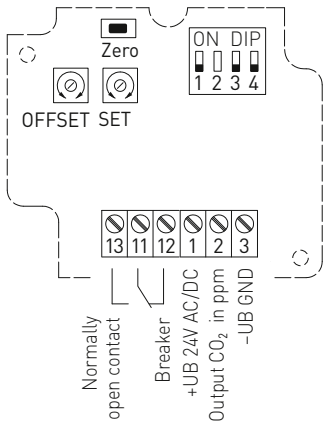

Connecting diagram **ACO_2-W**

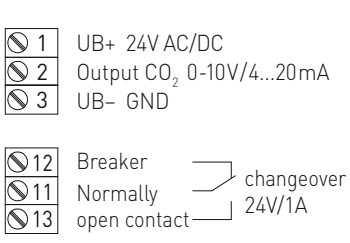

Dimensional drawing

ACO_2-W
ACO_2-SD

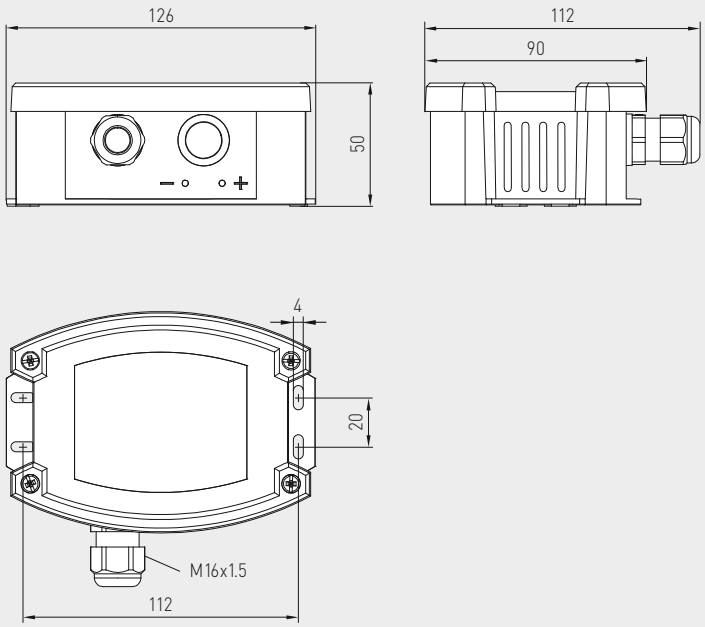

ACO_2-W
ACO_2-SD



DIP switch	**ACO_2-W**
CO_2 content	**DIP 1**
0...2000 ppm (default)	OFF
0...5000 ppm	**ON**
CO_2 automatic zero point	**DIP 3**
deactivated	OFF
activated (default)	**ON**
Output	**DIP 4**
Voltage 0-10 V (default)	OFF
Current 4...20 mA	**ON**
Note: **DIP 2** is not assigned!	

DIP switch	**ACO_2-SD**
CO_2 content	**DIP 1**
0...2000 ppm (default)	OFF
0...5000 ppm	**ON**

WS-03
Weather and sun protection hood (optional)



AERASGARD® ACO_2-SD On-wall CO_2 sensor and measuring transducer, *Standard*
AERASGARD® ACO_2-W On-wall CO_2 sensor and measuring transducer, *Premium*

Type / WG02B	Measuring Range CO_2	Output CO_2	Equipment	Display	Item No.
ACO_2-SD	(switchable)	(fixed)			
ACO2-SD-U	0...2000 ppm / 0...5000 ppm	0-10 V	–		1501-7110-1001-200
ACO_2-W	(switchable)	(switchable)			
ACO2-W	0...2000 ppm / 0...5000 ppm	0-10 V / 4...20 mA	changeover contact		1501-7110-7301-200
ACO2-W-DISPLAY	0...2000 ppm / 0...5000 ppm	0-10 V / 4...20 mA	changeover contact, display	■	see **AFTM-LQ-CO_2**
Note:	This unit **must not** be used as safety-relevant device!				

ACCESSORIES		
WS-03	**Weather and sun protection hood**, 200 x 180 x 150 mm, stainless steel **V2A** (1.4301)	7100-0040-6000-000
	For further information see last chapter!	

AERASGARD® ACO_2-W / ALQ-CO_2-W
AERASGARD® AFTM-(LQ)-CO_2-W / ATM-CO_2-SD

Multifunctional on-wall sensors and measuring transducers, for humidity, temperature, CO_2 content and air quality (VOC), calibratable, with active/switching output

S+S REGELTECHNIK

The maintenance-free, microprocessor-controlled on-wall sensor **AER**ASGARD® **ATM-CO_2-SD** with automatic calibration (fixed) is used for detecting the CO_2 content of the air within a range of 0...2000 ppm or 0...5000 ppm as well as the temperature within a range of –35...+80 °C. The measured values are converted into standard signals of 0-10 V.

The maintenance-free microprocessor-controlled on-wall sensor **AER**ASGARD® **AFTM-LQ-CO_2-W** and **ACO_2-W / ALQ-CO_2-W** with automatic calibration (can be deactivated via DIP switches) is used for detecting the overall room climate. It measures CO_2 within a range of 0...2000 ppm or 0...5000 ppm, air quality (VOC) in one of three sensitivity levels that can be selected LOW / MEDIUM (default) / HIGH, temperature within a range of –35...+80 °C as well as relative humidity of 0...100 % r.H. The measured values are converted into standard signals of 0-10 V or 4...20 mA (selectable via DIP switches). As an option, the measured values can be shown continuously in the illuminated display.

The relative humidity (% r.H.) quotient of water vapour partial pressure divided by the saturation vapour pressure at the respective gas temperature. A digital, long-term stable sensor used as measuring element for relative air humidity and temperature guarantees exact measurement results.

The CO_2 content of the air is measured using an optical NDIR sensor (non-dispersive infra-red technology). The detection range of the sensors is calibrated for standard applications such as monitoring residential rooms and conference rooms. Room ventilation on an as-needed basis, improved well-being and customer benefit, increased comfort as well as reduced operating costs through energy conservation are just some of the benefits of employing the AERASGARD® CO_2 sensor.

The explanations above demonstrate that there are applications for CO_2 measurements, for VOC measurements, but from our perspective, above all, for a combination of both measurands. The crucial factor in this respect is that both of these measurands are not convertible into each other and derivations to or from one another cannot be made. An NDIR CO_2 measuring instrument measures selectively and cannot detect any VOC; a VOC mixed gas sensor cannot recognize CO_2 molecules. For more information, see the start of the chapter.

TECHNICAL DATA

Voltage supply:	24 V AC / DC (± 10 %)
Power consumption:	< 4.8 W / 24 V DC typical; < 6.8 VA / 24 V AC typical; peak current 200 mA
Outputs:	**ATM-CO_2-SD** 0-10 V (fixed) **Axx-CO_2-W** 0-10 V **or** 4...20 mA, working resistance < 800 Ω (selectable via DIP switches, selected variant applies for all outputs), with offset potentiometer (± 10 % of the measuring range)
Relay output:	**ATM-CO_2-SD** without changeover contact **Axx-CO_2-W** with potential-free **changeover contact** (24 V / 1 A) (assignment selectable via DIP switches, switchpoint adjustable)
HUMIDITY	
Sensors:	**digital humidity sensor with integrated temperature sensor,** low hysteresis, high long-term stability
Sensor protection:	**plastic** sinter filter, Ø 16 mm, L = 35 mm, exchangeable (optional **metal** sinter filter, Ø 16 mm, L = 32 mm)
Measuring range, humidity:	0...100 % r. H.
Operating range, humidity:	0...95 % r. H. (without dew formation)
Deviation of humidity:	typically **± 2.0** % (20...80 % r. H.) at +25 °C, otherwise ± 3.0 %
Output, humidity:	0-10 V **or** 4...20 mA (selectable via DIP switches)
TEMPERATURE	
Measuring range, temperature:	–35...+80 °C
Operating range, temperature:	–10...+60 °C
Temperature deviation:	typically ± 0.4 K at 25 °C
Output, temperature:	**ATM-CO_2-SD** 0-10 V (fixed) **Axx-CO_2-W** 0-10 V **or** 4...20 mA (selectable via DIP switches)
AIR QUALITY (VOC)	
Sensor, VOC:	VOC sensor (metal oxide) (VOC = volatile organic compounds), with manual calibration (via zero button) and with automatic calibration (can be deactivated via DIP switches)
Measuring range, VOC:	0...100 % air quality; referred to calibrating gas; **multi-range switching** (selectable via DIP switches) VOC sensitivity low, medium, high
Output, VOC:	0-10 V (0 V = clean air, 10 V = polluted air) **or** 4...20 mA (selectable via DIP switches, switchpoint can be adjusted from 0...100 % of the output signal)
Measuring accuracy, VOC:	± 20 % of final value (referred to calibrating gas)
Service life:	> 60 months (under normal load conditions)
CARBON DIOXIDE (CO_2)	
Sensor, CO_2:	optical NDIR sensor (non-dispersive infra-red technology), with manual calibration (via zero button), **ATM-CO_2-SD** with automatic calibration (fixed) **Axx-CO_2-W** with automatic calibration (can be deactivated via DIP switches)
Measuring range, CO_2:	0...2000 ppm **or** 0...5000 ppm (selectable via DIP switches)
Output, CO_2:	**ATM-CO_2-SD** 0-10 V (fixed) **Axx-CO_2-W** 0-10 V **or** 4...20 mA (selectable via DIP switches)
Measuring accuracy, CO_2:	typically ± 30 ppm ± 3 % of measured value
Temperature dependence, CO_2:	± 5 ppm / °C or ± 0.5 % of measured value / °C (whichever is higher)

continued on next page!

AERASGARD® ACO_2-W / ALQ-CO_2-W
AERASGARD® AFTM-(LQ)-CO_2-W / ATM-CO_2-SD

Multifunctional on-wall sensors and measuring transducers, for humidity, temperature, CO_2 content and air quality (VOC), calibratable, with active/switching output

Dimensional drawing **AFTM-LQ-CO_2-W**

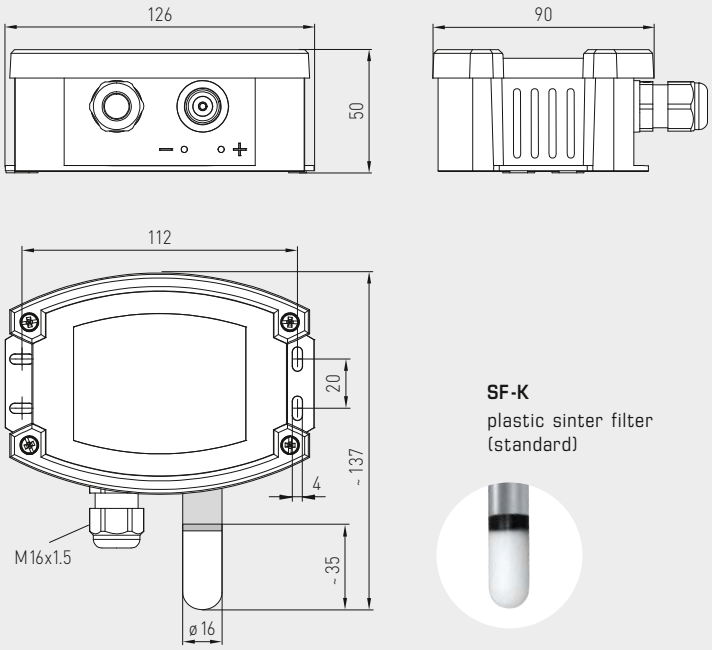

SF-K
plastic sinter filter
(standard)

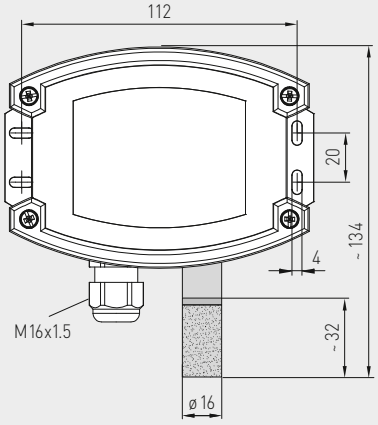

SF-M
metal sinter filter
(optional)



AFTM-LQ-CO_2-W
with plastic sinter filter
(standard)



AFTM-LQ-CO_2-W
with display and
plastic sinter filter
(standard)



TECHNICAL DATA (continued)

Pressure dependence:	± 0.13 % / mm Hg
Long-term stability:	< 2 % in 15 years
Gas exchange:	by diffusion
Ambient temperature:	–10...+60 °C
Response time:	< 2 minutes
Electrical connection:	0.14 - 1.5 mm², via screw terminals
Enclosure:	plastic, UV-stabilised, material polyamide, 30 % glass-globe reinforced, with quick-locking screws (slotted / Phillips head combination), colour traffic white (similar to RAL 9016), enclosure cover for display is transparent!
Enclosure dimensions:	126 x 90 x 50 mm (Tyr 2)
Cable gland:	M 16 x 1.5; including strain relief, exchangeable
Protective tube:	**stainless steel V2A** (1.4301), Ø 16 mm, NL = 55 mm
Process connection:	by screws
Protection class:	III (according to EN 60 730)
Protection type:	IP 65 (according to EN 60 529)
Standards:	CE conformity, electromagnetic compatibility according to EN 61 326, EMC Directive 2014 / 30 / EU
Optional:	three-line **display with illumination,** cutout approx. 70 x 40 mm (W x H), for displaying actual humidity, actual temperature, air quality and/or the actual CO_2 content

AERASGARD® ACO_2-W / ALQ-CO_2-W
AERASGARD® AFTM-(LQ)-CO_2-W / ATM-CO_2-SD

Multifunctional on-wall sensors and measuring transducers, for humidity, temperature, CO_2 content and air quality (VOC), calibratable, with active/switching output

S+S REGELTECHNIK

Schematic diagram **AFTM-LQ-CO_2-W**

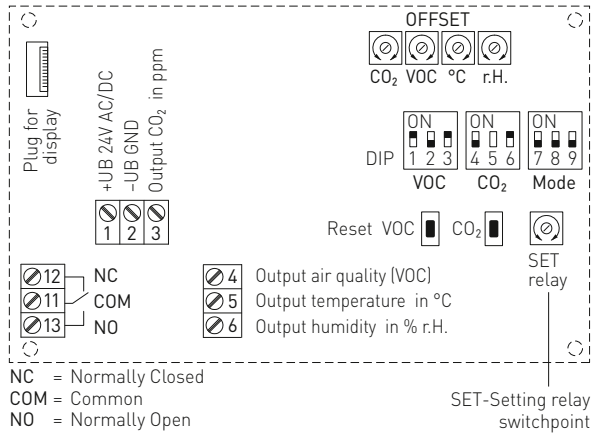

Schematic diagram **ATM-CO_2-SD**

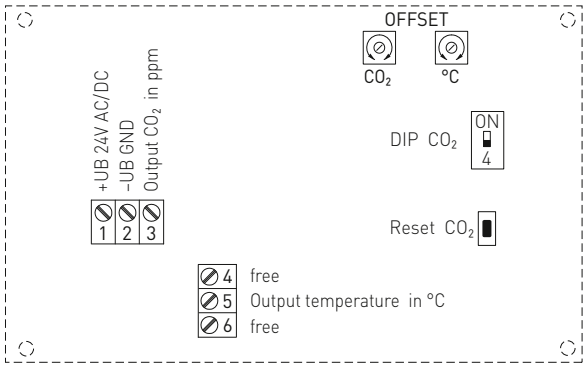

DIP switches	**AFTM-LQ-CO_2-W**	
VOC sensitivity	**DIP 1**	**DIP 2**
LOW	OFF	OFF
MEDIUM (default)	**ON**	OFF
HIGH	OFF	**ON**
VOC automatic zero point		**DIP 3**
deactivated		OFF
activated (default)		**ON**
CO_2 content		**DIP 4**
0...2000 ppm (default)		OFF
0...5000 ppm		**ON**
CO_2 automatic zero point		**DIP 6**
deactivated		OFF
activated (default)		**ON**
Relay assignment	**DIP 7**	**DIP 8**
CO_2 (default): 600...1900 ppm / 900...4700 ppm	OFF	OFF
VOC: 10...95 %	**ON**	OFF
Temperature: –23...+74 °C	OFF	**ON**
Humidity: 10...95% r.H.	**ON**	**ON**
Output		**DIP 9**
Voltage 0-10 V (default)		OFF
Current 4...20 mA		**ON**
Note: **DIP 5** is not assigned!		

DIP switches	**ATM-CO_2-SD**
CO_2 content	**DIP 4**
0...2000 ppm (default)	OFF
0...5000 ppm	**ON**

AERASGARD® ACO_2-W / ALQ-CO_2-W
AERASGARD® AFTM-(LQ)-CO_2-W / ATM-CO_2-SD

Multifunctional on-wall sensors and measuring transducers, for humidity, temperature, CO_2 content and air quality (VOC), calibratable, with active/switching output

AFTM-LQ-CO_2-W
with display



Humidity table
MR: 0...100 % r. H.

% r.H.	U_A in V	I_A in mA	% r.H.	U_A in V	I_A in mA
0	0	4.0	**60**	6.0	13.6
5	0.5	4.8	**65**	6.5	14.4
10	1.0	5.6	**70**	7.0	15.2
15	1.5	6.4	**75**	7.5	16.0
20	2.0	7.2	**80**	8.0	16.8
25	2.5	8.0	**85**	8.5	17.6
30	3.0	8.8	**90**	9.0	18.4
35	3.5	9.6	**95**	9.5	19.2
40	4.0	10.4	**100**	10.0	20.0
45	4.5	11.2			
50	5.0	12.0			
55	5.5	12.8			

Continued at the right ...

Temperature table
MR: –35...+80 °C

°C	U_A in V	I_A in mA	°C	U_A in V	I_A in mA
-35	0.0	4.0	**+25**	5.2	12.3
-30	0.4	4.7	**+30**	5.7	13.0
-25	0.9	5.4	**+35**	6.1	13.7
-20	1.3	6.1	**+40**	6.5	14.4
-15	1.7	6.8	**+45**	7.0	15.1
-10	2.2	7.5	**+50**	7.4	15.8
-5	2.6	8.2	**+55**	7.8	16.5
0	3.0	8.9	**+60**	8.3	17.2
+5	3.5	9.6	**+65**	8.7	17.9
+10	3.9	10.3	**+70**	9.1	18.6
+15	4.3	11.0	**+75**	9.6	19.3
+20	4.8	11.7	**+80**	10.0	20.0

Continued at the right ...

AERASGARD® ACO_2-W / ALQ-CO_2-W
AERASGARD® AFTM-(LQ)-CO_2-W / ATM-CO_2-SD

Multifunctional on-wall sensors and measuring transducers, for humidity, temperature, CO_2 content and air quality (VOC), calibratable, with active/switching output

S+S REGELTECHNIK

Dimensional drawing

ACO_2-W
ALQ-CO_2-W

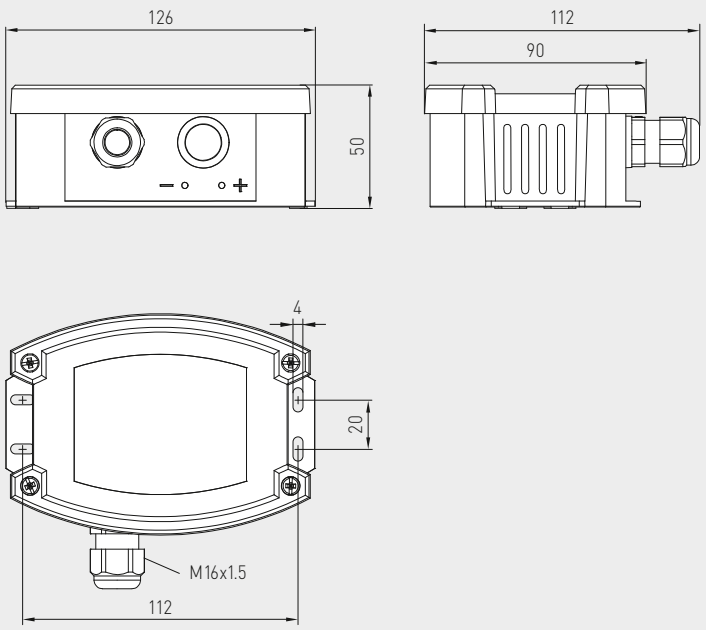

ACO_2-W
ALQ-CO_2-W





Dimensional drawing

AFTM-CO_2-W
AFTM-LQ-CO_2-W
ATM-CO_2-SD

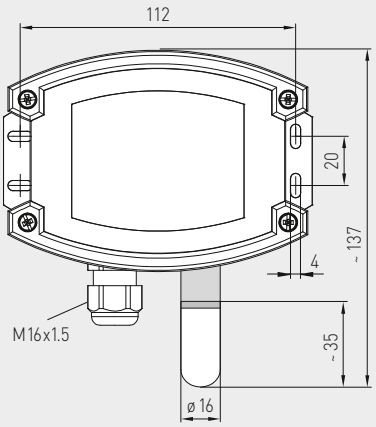

SF-K
plastic sinter filter
(standard)



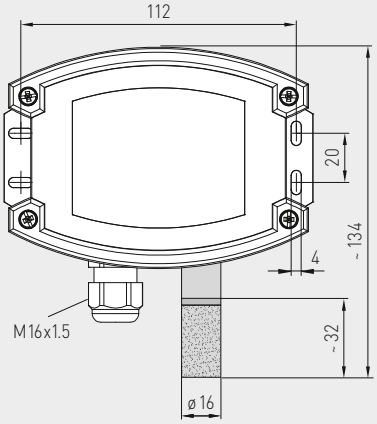

SF-M
metal sinter filter
(optional)



AFTM-CO_2-W
AFTM-LQ-CO_2-W
ATM-CO_2-SD
with metal sinter filter
(optional)





AERASGARD® ACO_2-W / ALQ-CO_2-W
AERASGARD® AFTM-(LQ)-CO_2-W / ATM-CO_2-SD

Multifunctional on-wall sensors and measuring transducers, for humidity, temperature, CO_2 content and air quality (VOC), calibratable, with active/switching output

WS-03
Weather and sun protection hood (optional)



AFTM-CO_2-W
AFTM-LQ-CO_2-W
ATM-CO_2-SD
with plastic sinter filter (standard)



AERASGARD® **ATM-CO_2-SD**	On-wall temperature and CO_2 sensor, *Standard*
AERASGARD® **ACO_2-W**	On-wall CO_2 sensor, *Premium*
AERASGARD® **ALQ-CO_2-W**	On-wall air quality (VOC) and CO_2 sensor, *Premium*
AERASGARD® **AFTM-CO_2-W**	Multifunctional on-wall sensor for humidity, temperature and CO_2 content, *Deluxe*
AERASGARD® **AFTM-LQ-CO_2-W**	Multifunctional on-wall sensor for humidity, temperature, CO_2 content and air quality (VOC), *Deluxe*

Type / WG02	Measuring Range Humidity	Temperature	CO_2	VOC	Equipment Display	Item No. (Baldur 2)
ATM-CO_2-SD			(switchable)			
ATM-CO2-SD-U	–	–35…+80 °C	0…2000 / 5000 ppm	–	–	1501-7112-1001-200
ACO_2-W			(switchable)			
ACO2-W (without display)	–	–	0…2000 / 5000 ppm	–	W	see **ACO_2-W / ACO_2-SD**
ACO2-W-DISPLAY	–	–	0…2000 / 5000 ppm	–	W ■	1501-7110-7371-200
ALQ-CO_2-W			(switchable)			
ALQ-CO2-W	–	–	0…2000 / 5000 ppm	0…100 %	W	1501-7111-7301-200
ALQ-CO2-W-DISPLAY	–	–	0…2000 / 5000 ppm	0…100 %	W ■	1501-7111-7371-200
AFTM-CO_2-W			(switchable)			
AFTM-CO2-W	0…100 % r.H.	–35…+80 °C	0…2000 / 5000 ppm	–	W	1501-7116-7301-200
AFTM-CO2-W-DISPLAY	0…100 % r.H.	–35…+80 °C	0…2000 / 5000 ppm	–	W ■	1501-7116-7371-200
AFTM-LQ-CO_2-W			(switchable)			
AFTM-LQ-CO2-W	0…100 % r.H.	–35…+80 °C	0…2000 / 5000 ppm	0…100 %	W	1501-7118-7301-200
AFTM-LQ-CO2-W DISPLAY	0…100 % r.H.	–35…+80 °C	0…2000 / 5000 ppm	0…100 %	W ■	1501-7118-7371-200
Outputs:	**0-10 V or 4…20 mA** (selectable via DIP switches, selected variant applies for all outputs) – *Standard* on-wall sensor **ATM-CO_2-SD** with fixed output 0-10 V!					
Equipment:	**W = changeover contact** – *Standard* on-wall sensor **ATM-CO_2-SD** without changeover contact!					
Note:	This unit **must not** be used as safety-relevant device!					
ACCESSORIES						
SF-M	**Metal** sinter filter, Ø 16 mm, L = 32 mm, exchangeable stainless steel **V4A** (1.4404)					7000-0050-2200-100
WS-03	**Weather and sun protection hood**, 200 x 180 x 150 mm, stainless steel **V2A** (1.4301)					7100-0040-6000-000
	For further information see last chapter!					

AERASGARD® KLQ-W
AERASGARD® KLQ-SD

Duct air quality sensors (VOC) and measuring transducers, including installation flange, self-calibrating, with multi-range switching and active/switching output

S+S REGELTECHNIK

Patented quality product (patent no. DE 10 2014 010 719.1)

The maintenance-free microprocessor-controlled duct sensor **AER**ASGARD® **KLQ-SD** with automatic calibration (fixed), enclosure with snap-on lid, is used for determining the air quality based on a mixed gas sensor/VOC sensor. The measurement value is converted into standard signal of 0-10 V.

The maintenance-free microprocessor-controlled duct sensor **AER**ASGARD® **KLQ-W** with automatic calibration (can be deactivated via DIP switches), enclosure with quick-locking screws, is used for determining the air quality or based on a mixed gas sensor/VOC sensor. The measurement value is converted into standard signal of 0-10 V or 4...20 mA.

It is used

- For air quality measurement in offices, hotels, meeting rooms and convention centres, apartments, stores, and restaurants, etc.
- For quantitative evaluation of room air pollution with contaminating gases (cigarette smoke, body perspiration, exhaled breathing air, solvent vapours, emissions from building members and cleaning agents)
- For adjustable sensitivity regarding the maximum air contamination to be expected
- For room ventilation as-needed, enabled by air changes only taking place when air is polluted while conserving energy at the same time.

The sensor's service life depends on the type of burden and gas concentration and is more than 60 months under normal load conditions. The new design allows you to choose between three sensitivity ranges that are adjusted using DIP switches, giving you three measuring ranges: LOW for low, MEDIUM (default) for medium, and HIGH for high VOC sensitivity. VOC is the abbreviation for volatile organic compounds. According to the definition by the World Health Organization WHO, VOC are organic substances with a boiling range from +60 to +250 °C. Examples of VOCs include compounds of the substance groups alkanes/alkenes, aromatic compounds, terpenes, halogenated hydrocarbons, esters, aldehydes, and ketones. There is a large number of naturally occurring VOCs, some of which are also released into the atmosphere in substantial quantities, e.g. terpenes and isoprene from forests. For more information, please refer to beginning of this chapter.



TECHNICAL DATA

Power supply:	24 V AC / DC (± 10 %)
Power consumption:	< 1.5 W / 24 V DC typical; < 2.9 VA / 24 V AC typical; peak current 200 mA
Sensor:	VOC sensor (metal oxide) (VOC = volatile organic compounds), with manual calibration (via zero button), **KLQ-SD** with automatic calibration (fixed) **KLQ-W** with automatic calibration (can be deactivated via DIP switches)
Measuring range:	0...100 % air quality; referred to calibrating gas; **multi-range switching** (selectable via DIP switches) VOC sensibility low, medium, high
Output:	(0 V = clean air, 10 V = polluted air) **KLQ-SD** 0-10 V (fixed) **KLQ-W** 0-10 V **or** 4...20 mA, working resistance < 800 Ω (selectable via DIP switches), with offset potentiometer (± 10 % of the measuring range)
Relay output:	**KLQ-SD** without changeover contact **KLQ-W** with potential-free **changeover contact** (24 V / 1 A), switchpoint adjustable
Measuring accuracy:	± 20 % of final value (referred to calibrating gas)
Service life:	> 60 months
Gas exchange:	by diffusion
Warm-up time:	approx. 1 hour
Response time:	approx. 1 minute, minimum flow rate 0.3 m/s (air)
Ambient temperature:	–10...+60 °C
Electrical connection:	0.14 - 1.5 mm², via terminals
Enclosure:	plastic, UV-stabilised, material polyamide, 30 % glass-globe-reinforced, colour traffic white (similar to RAL 9016), **KLQ-SD** **with snap-on lid,** **KLQ-W** **with quick-locking screws** (slotted / Phillips head combination)
Enclosure dimensions:	72 x 64 x 37.8 mm (Tyr 1/Tyr 01 without display) 72 x 64 x 43.3 mm (Tyr 1 with display)
Cable gland:	M 16 x 1.5, including strain relief, exchangeable, max. inner diameter 10.4 mm
Protective tube:	**PLEUROFORM**™, material polyamide (PA6), with torsion protection, Ø 20 mm, NL = 202.5 mm, v_{max} = 30 m/s (air)
Process connection:	by mounting flange, plastic (included in the scope of delivery)
Protection class:	III (according to EN 60 730)
Protection type:	**KLQ-SD** **IP 43** (according to EN 60 529) enclosure only! **KLQ-W** **IP 65** (according to EN 60 529) enclosure only!
Standards:	CE conformity, electromagnetic compatibility according to EN 61 326, EMC Directive 2014 / 30 / EU
ACCESSORIES	See last chapter

MFT-20-K
Mounting flange, plastic



Dimensional drawing

KLQ-W
KLQ-SD

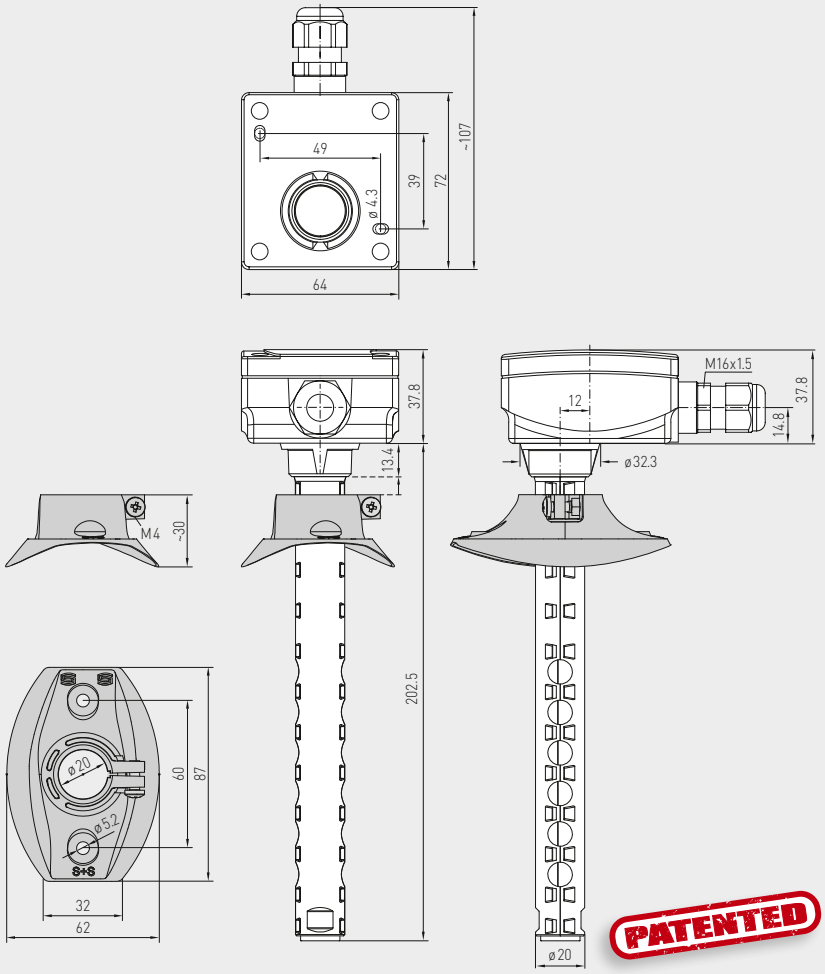

KLQ-SD
with snap-on lid
(IP 43)



KLQ-W
with quick-locking
screws (IP 65)



Mounting diagram

KLQ-W
KLQ-SD

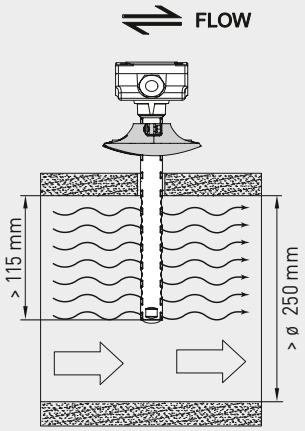

AERASGARD® KLQ-W
AERASGARD® KLQ-SD

Duct air quality sensors (VOC) and measuring transducers, including installation flange, self-calibrating, with multi-range switching and active/switching output

S+S REGELTECHNIK

Schematic diagram **KLQ-W**

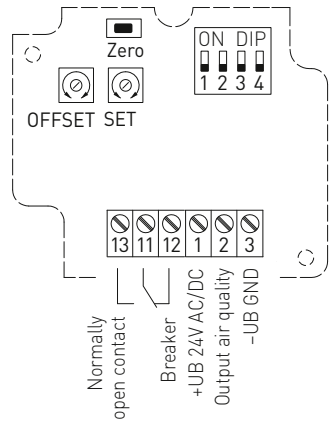

Schematic diagram **KLQ-SD**

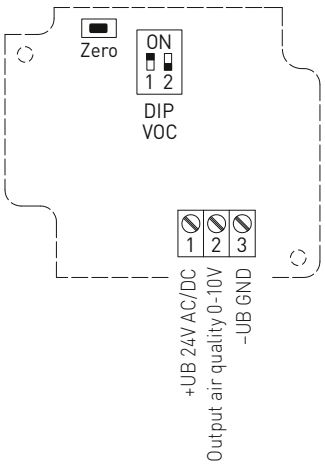

Connecting diagram **KLQ-W**

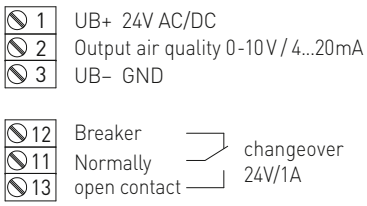

Connecting diagram **KLQ-SD**

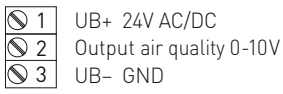

DIP switches	KLQ-W	
VOC sensitivity	**DIP 1**	**DIP 2**
LOW	OFF	OFF
MEDIUM (default)	**ON**	OFF
HIGH	OFF	**ON**
VOC automatic zero point		**DIP 3**
deactivated		OFF
activated (default)		**ON**
Output		**DIP 4**
Voltage 0-10 V (default)		OFF
Current 4...20 mA		**ON**

DIP switches	KLQ-SD	
VOC sensitivity	**DIP 1**	**DIP 2**
LOW	OFF	OFF
MEDIUM (default)	**ON**	OFF
HIGH	OFF	**ON**

AERASGARD® KLQ-SD Duct air quality sensor and measuring transducer, *Standard*
AERASGARD® KLQ-W Duct air quality sensor and measuring transducer, *Premium*

Type / WG02	Measuring Range VOC	Output VOC	Equipment	Item No.
KLQ-SD		(fixed)		**IP 43**
KLQ-SD-U	0...100 %	0-10 V	–	1501-3170-1001-200
KLQ-W		(switchable)		**IP 65**
KLQ-W	0...100 %	0-10 V / 4...20 mA	changeover contact	1501-3150-7301-200
Note:	This unit **must not** be used as safety-relevant device!			

AERASGARD® KCO_2-W
AERASGARD® KCO_2-SD

Duct CO_2 sensors and measuring transducers, incl. mounting flange, self-calibrating, with multi-range switching and active / switching output

S+S REGELTECHNIK

Patented quality product (patent no. DE 10 2014 010 719.1)

The maintenance-free microprocessor-controlled duct sensor **AER**ASGARD® **KCO_2-SD** with automatic calibration (fixed), enclosure with snap-on lid, without display, is used for detecting the CO_2 content of the air within a range of 0...2000 ppm or 0...5000 ppm. The measurement value is converted into standard signal of 0-10 V.

The maintenance-free microprocessor-controlled duct sensor **AER**ASGARD® **KCO_2-W** with automatic calibration (can be deactivated via DIP switches), enclosure with quick-locking screws, optionally with / without display, is used for detecting the CO_2 content of the air within a range of 0...2000 ppm or 0...5000 ppm. The measurement value is converted into standard signal of 0-10 V or 4...20 mA.

The CO_2 content of the air is measured using an optical NDIR sensor (non-dispersive infra-red technology). The detection range of the CO_2 sensor is calibrated for standard applications such as monitoring residential rooms and conference rooms. Room ventilation on an as-needed basis, improved well-being and customer benefit, increased comfort as well as reduced operating costs through energy conservation are just some of the benefits of employing AERASGARD® CO_2 sensors.

A measuring system based on NDIR (non-dispersive infra-red technology) for CO_2 measurement consists of a light source and a receptor. A certain range of wavelengths of light radiated by the source is damped and absorbed by CO_2 molecules in the measured section. This damping is detected by the receptor. For more information, see the start of the chapter.

TECHNICAL DATA

Power supply:	24 V AC / DC (± 10 %)
Power consumption:	< 1.5 W / 24 V DC typical; < 2.9 VA / 24 V AC typical; Peak current 200 mA
Sensor:	optical NDIR sensor (non-dispersive infra-red technology), with manual calibration (via zero button), **KCO_2-SD** with automatic calibration (fixed) **KCO_2-W** with automatic calibration (can be deactivated via DIP switches)
Measuring range:	**Multi-range switching** (selectable via DIP switches) 0...2000 ppm; 0...5000 ppm
Output:	**KCO_2-SD** 0-10 V (fixed) **KCO_2-W** 0-10 V **or** 4...20 mA, working resistance < 800 Ω (selectable via DIP switches), with offset potentiometer (± 10 % of the measuring range)
Relay output:	**KCO_2-SD** without changeover contact **KCO_2-W** with potential-free **changeover contact** (24 V / 1 A), switchpoint adjustable
Measuring accuracy:	typically ± 30 ppm ± 3 % of measured value
Temperature dependence:	± 5 ppm / °C or ± 0.5 % of measured value / °C (whichever is higher)
Pressure dependence:	± 0.13 % / mm Hg
Long-term stability:	< 2 % in 15 years
Gas exchange:	by diffusion
Warm up time:	approx. 1 hour
Ambient temperature:	–10...+60 °C
Response time:	approx. 1 minute, minimum flow rate 0.3 m / s (air)
Electrical connection:	0.14 - 1.5 mm^2, via screw terminals
Enclosure:	plastic, UV-stabilised, material polyamide, 30 % glass-globe reinforced, colour traffic white (similar to RAL 9016), enclosure cover for display is transparent! **KCO_2-SD with snap-on lid,** **KCO_2-W with quick-locking screws** (slotted / Phillips head combination)
Enclosure dimensions:	72 x 64 x 37.8 mm (Tyr 1/Tyr 01 without display) 72 x 64 x 43.3 mm (Tyr 1 with display)
Cable gland:	M 16 x 1.5; including strain relief, exchangeable, max. inner diameter 10.4 mm
Protective tube:	**PLEUROFORM™**, material polyamide (PA6), with torsion protection, Ø 20 mm, NL = 202.5 mm, v_{max} = 30 m/s (air)
Process connection:	via flange made of plastic (included in scope of delivery)
Protection class:	III (according to EN 60 730)
Protection type:	**KCO_2-SD IP 43** (as per EN 60 529) enclosure only! **KCO_2-W IP 65** (as per EN 60 529) enclosure only!
Standards:	CE conformity, electromagnetic compatibility according to EN 61 326, EMC Directive 2014 / 30 / EU
Optional:	**Display with illumination,** two line, cutout approx. 36 x 15 mm (W x H), for displaying the **Actual CO_2 content** and for setting the **switchpoint**
ACCESSORIES	See last chapter

MFT-20-K
Mounting flange, plastic



Dimensional drawing

KCO_2-W
KCO_2-SD

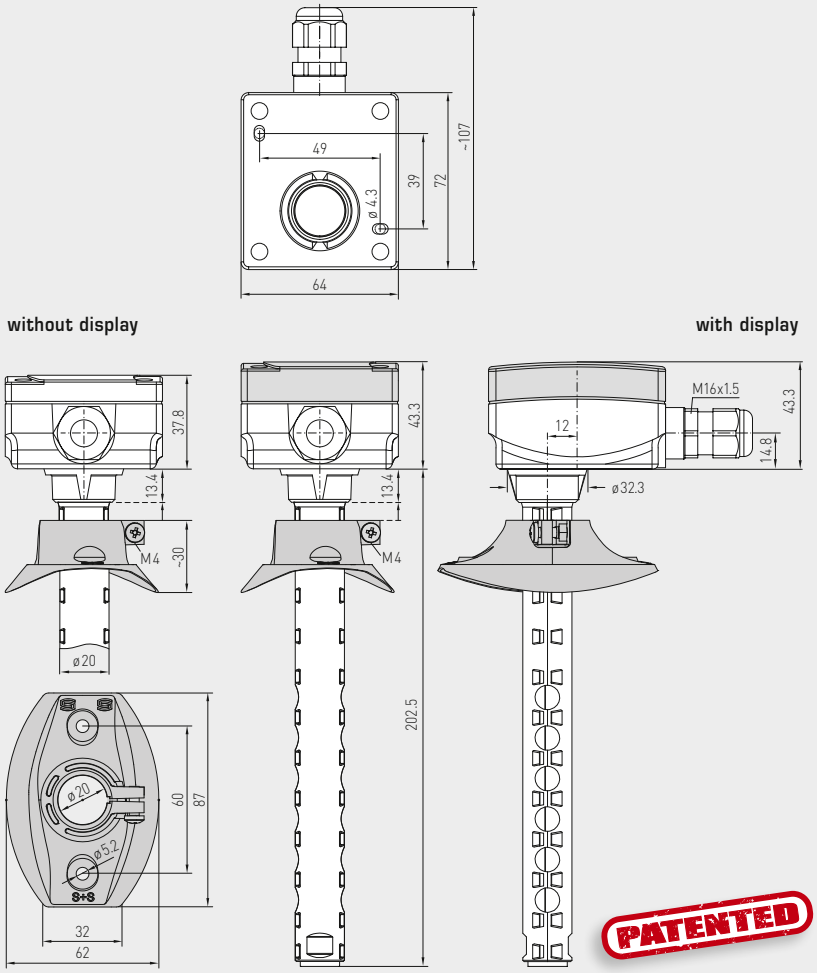

Mounting diagram

KCO_2-W
KCO_2-SD

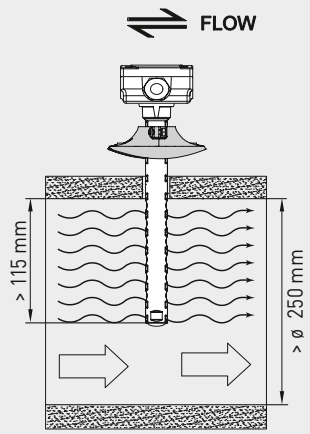

KCO_2-SD
with snap-on lid
(IP 43)



KCO_2-W
with quick-locking
screws (IP 65)



KCO_2-W
with quick-locking
screws and
display (IP 65)



AERASGARD® KCO_2-W
AERASGARD® KCO_2-SD

Duct CO_2 sensors and measuring transducers, incl. mounting flange, self-calibrating, with multi-range switching and active / switching output

S+S REGELTECHNIK

Schematic diagram **KCO_2-W**

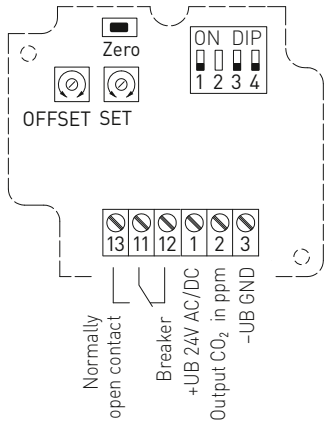

Schematic diagram **KCO_2-SD**

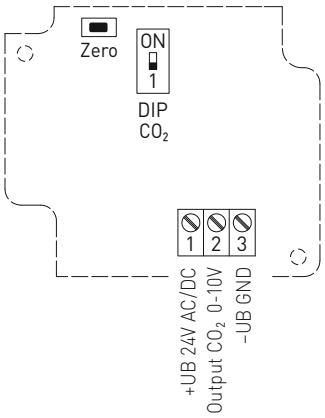

Connecting diagram **KCO_2-W**

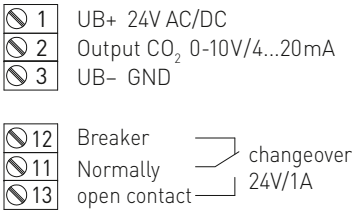

Connecting diagram **KCO_2-SD**



DIP switch	**KCO_2-W**
CO_2 content	**DIP 1**
0...2000 ppm (default)	OFF
0...5000 ppm	**ON**
CO_2 automatic zero point	**DIP 3**
deactivated	OFF
activated (default)	**ON**
Output	**DIP 4**
Voltage 0-10 V (default)	OFF
Current 4...20 mA	**ON**
Note: **DIP 2** is not assigned!	

DIP switch	**KCO_2-SD**
CO_2 content	**DIP 1**
0...2000 ppm (default)	OFF
0...5000 ppm	**ON**

AERASGARD® KCO_2-W
AERASGARD® KCO_2-SD

Duct CO_2 sensors and measuring transducers, incl. mounting flange, self-calibrating, with multi-range switching and active / switching output

KCO_2-W
with Display

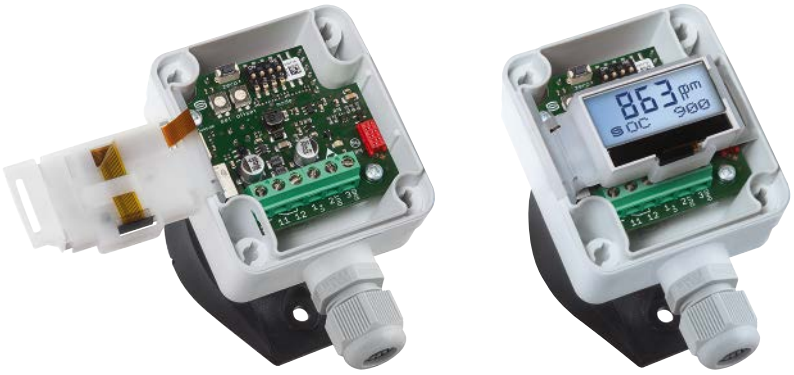

AERASGARD® KCO_2-SD Duct CO_2 sensors and measuring transducers, *Standard*
AERASGARD® KCO_2-W Duct CO_2 sensors and measuring transducers, *Premium*

Type / WG02	Measuring Range CO_2	Output CO_2	Equipment	Display	Item No.
KCO_2-SD	(switchable)	(fixed)			**IP 43**
KCO2-SD-U	0...2000 ppm / 0...5000 ppm	0-10 V	–		1501-3160-1001-200
KCO_2-W	(switchable)	(switchable)			**IP 65**
KCO2-W	0...2000 ppm / 0...5000 ppm	0-10 V / 4...20 mA	changeover contact		1501-3140-7301-200
KCO2-W DISPLAY	0...2000 ppm / 0...5000 ppm	0-10 V / 4...20 mA	changeover contact, display	■	1501-3140-7321-200
Note:	This unit **must not** be used as safety-relevant device!				

AERASGARD® KLQ-CO_2-W
AERASGARD® KFTM-(LQ)-CO_2-W / KTM-CO_2-SD

Multifunctional duct sensors and measuring transducers incl. mounting flange, for humidity, temperature, CO_2 content and air quality (VOC), calibratable, with active/switching output

S+S REGELTECHNIK

Patented quality product (patent no. DE 10 2014 010 719.1)

The maintenance-free microprocessor-controlled duct sensor **AER**ASGARD® **KTM-CO_2-SD** with automatic calibration (fixed) is used for detecting the CO_2 content of the air within a range of 0...2000 ppm or 0...5000 ppm as well as the temperature within a range of –35...+80 °C. The measured values are converted into standard signals of 0-10 V.

The maintenance-free microprocessor-controlled duct sensor **AER**ASGARD® **KFTM-LQ-CO_2-W** and **KLQ-CO_2-W** with automatic calibration (can be deactivated via DIP switches) is used for detecting the overall room climate. It measures CO_2 within a range of 0...2000 ppm or 0...5000 ppm, air quality (VOC) in one of three sensitivity levels that can be selected LOW / MEDIUM (default) / HIGH, temperature within a range of –35...+80 °C as well as relative humidity from 0...100 % r.H. The measured values are converted into standard signals of 0-10 V or 4...20 mA (selectable via DIP switches). As an option, the measured values can be shown continuously in the illuminated display.

The relative humidity (% r.H.) quotient of water vapour partial pressure divided by the saturation vapour pressure at the respective gas temperature. A digital, long-term stable sensor used as measuring element for relative air humidity and temperature guarantees exact measurement results.

The CO_2 content of the air is measured using an optical NDIR sensor (non-dispersive infra-red technology). The detection range of the sensors is calibrated for standard applications such as monitoring residential rooms and conference rooms. Room ventilation on an as-needed basis, improved well-being and customer benefit, increased comfort as well as reduced operating costs through energy conservation are just some of the benefits of employing the AERASGARD® CO_2 sensor.

The explanations above demonstrate that there are applications for CO_2 measurements, for VOC measurements, but from our perspective, above all, for a combination of both measurands. The crucial factor in this respect is that both of these measurands are not convertible into each other and derivations to or from one another cannot be made. An NDIR CO_2 measuring instrument measures selectively and cannot detect any VOC; a VOC mixed gas sensor cannot recognize CO_2 molecules. For more information, see the start of the chapter.

TECHNICAL DATA

Voltage supply:	24 V AC / DC (± 10 %)
Power consumption:	< 4.8 W / 24 V DC typical; < 6.8 VA / 24 V AC typical; peak current 200 mA
Outputs:	**KTM-CO_2-SD** 0-10 V (fixed) **Kxx-CO_2-W** 0-10 V **or** 4...20 mA, working resistance < 800 Ω (selectable via DIP switches, selected variant applies for all outputs), with offset potentiometer (± 10 % of the measuring range)
Relay output:	**KTM-CO_2-SD** without changeover contact **Kxx-CO_2-W** with potential-free **changeover contact** (24 V / 1 A) (assignment selectable via DIP switches, switchpoint adjustable)
HUMIDITY	
Sensors:	**digital humidity sensor with integrated temperature sensor,** low hysteresis, high long-term stability
Sensor protection:	**plastic** sinter filter, Ø 16 mm, L = 35 mm, exchangeable (optional **metal** sinter filter, Ø 16 mm, L = 32 mm)
Measuring range, humidity:	0...100 % r. H.
Operating range, humidity:	0...95 % r. H. (without dew formation)
Deviation of humidity:	typically **± 2.0** % (20...80 % r. H.) at +25 °C, otherwise ± 3.0 %
Output, humidity:	0-10 V **or** 4...20 mA (selectable via DIP switches)
TEMPERATURE	
Measuring range, temperature:	–35...+80 °C
Operating range, temperature:	–10...+60 °C
Temperature deviation:	typically ± 0.2 K at +25 °C
Output, temperature:	**KTM-CO_2-SD** 0-10 V (fixed) **Kxx-CO_2-W** 0-10 V **or** 4...20 mA (selectable via DIP switches)
AIR QUALITY (VOC)	
Sensor, VOC:	VOC sensor (metal oxide) (VOC = volatile organic compounds), with manual calibration (via zero button) and with automatic calibration (can be deactivated via DIP switches)
Measuring range, VOC:	0...100 % air quality; referred to calibrating gas; **multi-range switching** (selectable via DIP switches) VOC sensitivity low, medium, high
Output, VOC:	0-10 V (0 V = clean air, 10 V = polluted air) **or** 4...20 mA (selectable via DIP switches, switchpoint can be adjusted from 0...100 % of the output signal)
Measuring accuracy, VOC:	± 20 % of final value (referred to calibrating gas)
Service life:	> 60 months (under normal load conditions)
CARBON DIOXIDE (CO_2)	
Sensor, CO_2:	optical NDIR sensor (non-dispersive infra-red technology), with manual calibration (via zero button), **KTM-CO_2-SD** with automatic calibration (fixed) **Kxx-CO_2-W** with automatic calibration (can be deactivated via DIP switches)
Measuring range, CO_2:	0...2000 ppm **or** 0...5000 ppm (selectable via DIP switches)
Output, CO_2:	**KTM-CO_2-SD** 0-10 V (fixed) **Kxx-CO_2-W** 0-10 V **or** 4...20 mA (selectable via DIP switches)
Measuring accuracy, CO_2:	typically ± 30 ppm ± 3 % of measured value
Temperature dependence, CO_2:	± 5 ppm / °C or ± 0.5 % of measured value / °C (whichever is higher)

continued on next page!

SF-K

Plastic sinter filter (standard)



SF-M

Metal sinter filter (optional)



MFT-20-K

Mounting flange, plastic



Dimensional drawing **MFT-20-K**

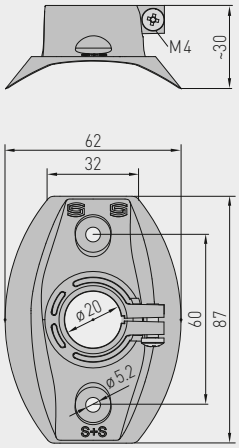

AERASGARD® KLQ-CO_2-W
AERASGARD® KFTM-(LQ)-CO_2-W / KTM-CO_2-SD

Multifunctional duct sensors and measuring transducers incl. mounting flange, for humidity, temperature, CO_2 content and air quality (VOC), calibratable, with active/switching output

Dimensional drawing **KFTM-LQ-CO_2-W**

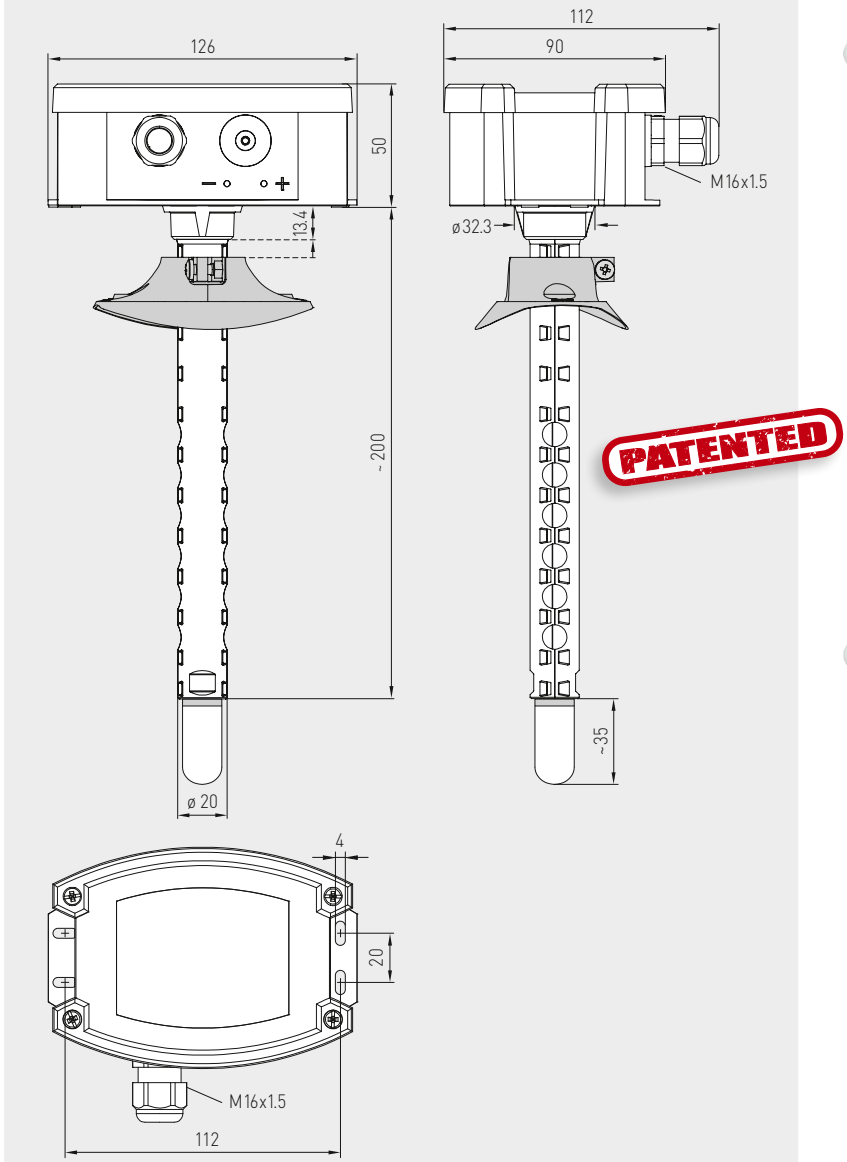

PATENTED

KFTM-LQ-CO_2-W
with plastic sinter filter (standard)



KFTM-LQ-CO_2-W
with display and plastic sinter filter (standard)



TECHNICAL DATA (continued)	
Pressure dependence:	± 0.13 % / mm Hg
Long-term stability:	< 2 % in 15 years
Gas exchange:	by diffusion
Ambient temperature:	–10...+60 °C
Response time:	< 2 minutes, minimum flow rate 0.3 m/s (air)
Electrical connection:	0.14 - 1.5 mm², via screw terminals
Enclosure:	plastic, UV-stabilised, material polyamide, 30 % glass-globe reinforced, with quick-locking screws (slotted / Phillips head combination), colour traffic white (similar to RAL 9016), enclosure cover for display is transparent!
Enclosure dimensions:	126 x 90 x 50 mm (Tyr 2)
Cable gland:	M 16 x 1.5; including strain relief, exchangeable
Protective tube:	**PLEUROFORM**™, material polyamide (PA6), with torsion protection, Ø 20 mm, v_{max} = 30 m/s (air) without filter: NL = 202.5 mm / with plastic filter: NL = 235 mm (optional with metal filter: NL = 227 mm)
Process connection:	via flange made of plastic (included in scope of delivery)
Protection class:	III (according to EN 60 730)
Protection type:	IP 65 (according to EN 60 529) enclosure only! (PLEUROFORM IP 30)
Standards:	CE conformity, electromagnetic compatibility according to EN 61 326, EMC Directive 2014 / 30 / EU
Optional:	three-line **display with illumination,** cutout approx. 70 x 40 mm (W x H), for displaying actual humidity, actual temperature, air quality and/or the actual CO_2 content

AERASGARD® KLQ-CO_2-W
AERASGARD® KFTM-(LQ)-CO_2-W / KTM-CO_2-SD

Multifunctional duct sensors and measuring transducers incl. mounting flange, for humidity, temperature, CO_2 content and air quality (VOC), calibratable, with active/switching output

S+S REGELTECHNIK

Schematic diagram **KFTM-LQ-CO_2-W**

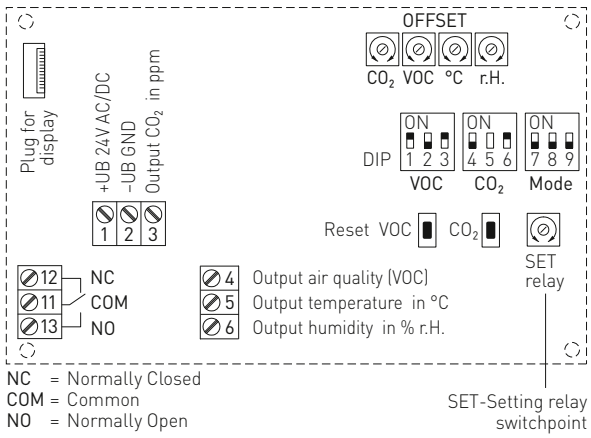

Schematic diagram **KTM-CO_2-SD**

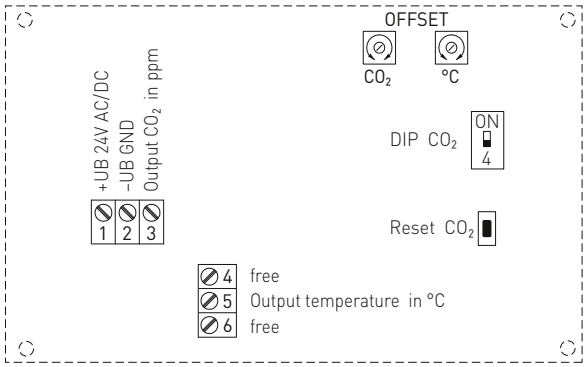

DIP switches	**KFTM-LQ-CO_2-W**	
VOC sensitivity	**DIP 1**	**DIP 2**
LOW	OFF	OFF
MEDIUM (default)	**ON**	OFF
HIGH	OFF	**ON**
VOC automatic zero point		**DIP 3**
deactivated		OFF
activated (default)		**ON**
CO_2 content		**DIP 4**
0...2000 ppm (default)		OFF
0...5000 ppm		**ON**
CO_2 automatic zero point		**DIP 6**
deactivated		OFF
activated (default)		**ON**
Relay assignment	**DIP 7**	**DIP 8**
CO_2 (default): 600...1900 ppm / 900...4700 ppm	OFF	OFF
VOC: 10...95 %	**ON**	OFF
Temperature: –23...+74 °C	OFF	**ON**
Humidity: 10...95% r.H.	**ON**	**ON**
Output		**DIP 9**
Voltage 0-10 V (default)		OFF
Current 4...20 mA		**ON**
Note: **DIP 5** is not assigned!		

DIP switches	**KTM-CO_2-SD**
CO_2 content	**DIP 4**
0...2000 ppm (default)	OFF
0...5000 ppm	**ON**

AERASGARD® KLQ-CO_2-W
AERASGARD® KFTM-(LQ)-CO_2-W / KTM-CO_2-SD

Multifunctional duct sensors and measuring transducers incl. mounting flange, for humidity, temperature, CO_2 content and air quality (VOC), calibratable, with active/switching output

KLQ-CO_2-W
KFTM-LQ-CO_2-W
with display







Humidity table
MR: 0...100 % r. H.

% r.H.	U_A in V	I_A in mA	% r.H.	U_A in V	I_A in mA
0	0	4.0	**60**	6.0	13.6
5	0.5	4.8	**65**	6.5	14.4
10	1.0	5.6	**70**	7.0	15.2
15	1.5	6.4	**75**	7.5	16.0
20	2.0	7.2	**80**	8.0	16.8
25	2.5	8.0	**85**	8.5	17.6
30	3.0	8.8	**90**	9.0	18.4
35	3.5	9.6	**95**	9.5	19.2
40	4.0	10.4	**100**	10.0	20.0
45	4.5	11.2			
50	5.0	12.0			
55	5.5	12.8			

Continued at the right ...

Temperature table
MR: –35...+80 °C

°C	U_A in V	I_A in mA	°C	U_A in V	I_A in mA
-35	0.0	4.0	**+25**	5.2	12.3
-30	0.4	4.7	**+30**	5.7	13.0
-25	0.9	5.4	**+35**	6.1	13.7
-20	1.3	6.1	**+40**	6.5	14.4
-15	1.7	6.8	**+45**	7.0	15.1
-10	2.2	7.5	**+50**	7.4	15.8
-5	2.6	8.2	**+55**	7.8	16.5
0	3.0	8.9	**+60**	8.3	17.2
+5	3.5	9.6	**+65**	8.7	17.9
+10	3.9	10.3	**+70**	9.1	18.6
+15	4.3	11.0	**+75**	9.6	19.3
+20	4.8	11.7	**+80**	10.0	20.0

Continued at the right ...

AERASGARD® KLQ-CO_2-W
AERASGARD® KFTM-(LQ)-CO_2-W / KTM-CO_2-SD

Multifunctional duct sensors and measuring transducers incl. mounting flange, for humidity, temperature, CO_2 content and air quality (VOC), calibratable, with active/switching output

S+S REGELTECHNIK

Dimensional drawing

KLQ-CO_2-W
KTM-CO_2-SD

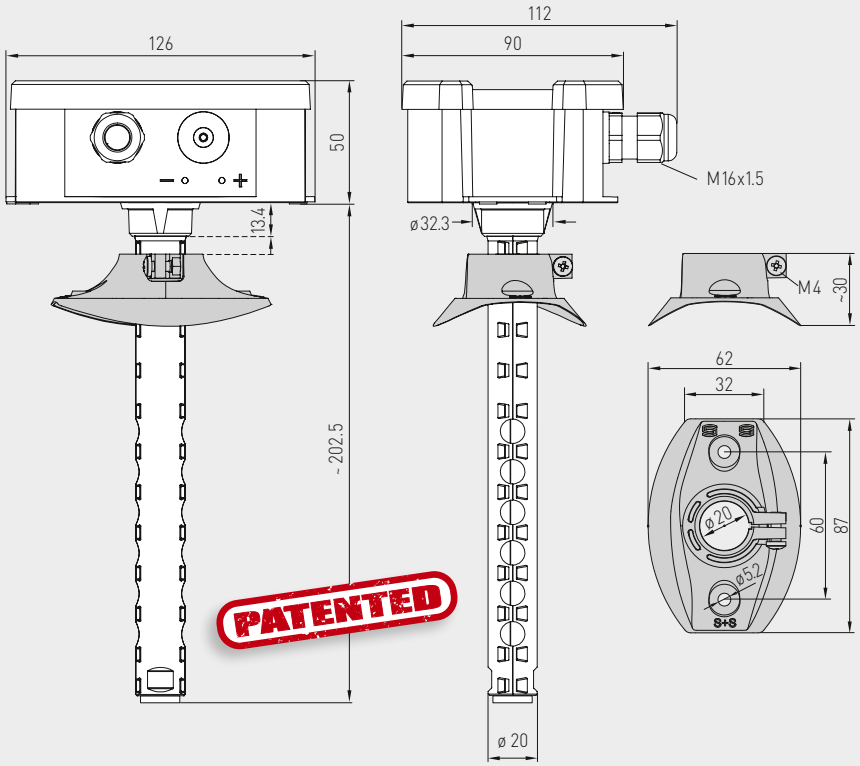

KLQ-CO_2-W
KTM-CO_2-SD



Dimensional drawing

KFTM-CO_2-W
KFTM-LQ-CO_2-W

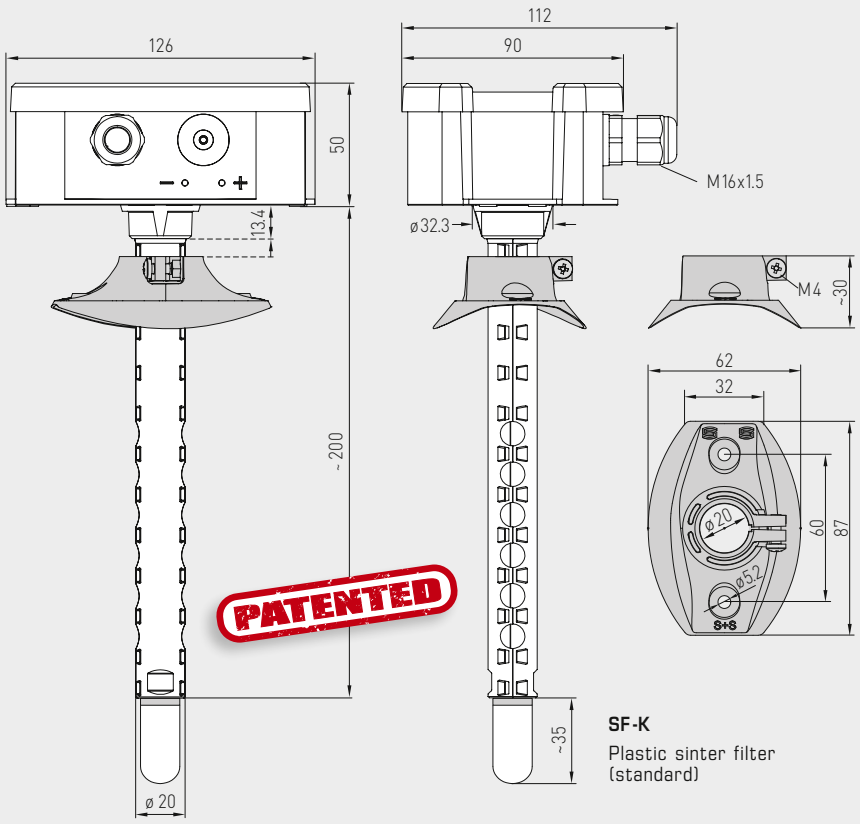

SF-K
Plastic sinter filter (standard)

KFTM-CO_2-W
KFTM-LQ-CO_2-W



SF-M
Metal sinter filter (optional)

AERASGARD® KLQ-CO_2-W
AERASGARD® KFTM-(LQ)-CO_2-W / KTM-CO_2-SD

Multifunctional duct sensors and measuring transducers incl. mounting flange, for humidity, temperature, CO_2 content and air quality (VOC), calibratable, with active/switching output

Mounting diagram — **KLQ-CO_2-W**
KFTM-LQ-CO_2-W
KTM-CO_2-SD

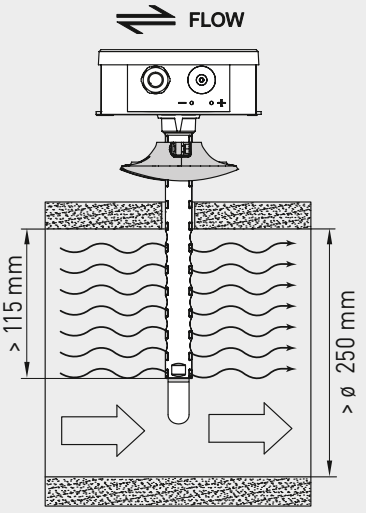

AERASGARD® KTM-CO_2-SD	Duct sensor for temperature and CO_2 content, *Standard*
AERASGARD® KLQ-CO_2-W	Duct sensor for air quality (VOC) and CO_2 content, *Premium*
AERASGARD® KFTM-CO_2-W	Multifunctional duct sensor for humidity, temperature and CO_2 content, *Deluxe*
AERASGARD® KFTM-LQ-CO_2-W	Multifunctional duct sensor for humidity, temperature, air quality (VOC) and CO_2 content, *Deluxe*

Type / WG02	Measuring Range Humidity	Temperature	CO_2	VOC	Equipment Display		Item No.
KTM-CO_2-SD			(switchable)				
KTM-CO2-SD-U	–	–35…+80 °C	0…2000 / 5000 ppm	–	–		1501-8112-1001-200
KLQ-CO_2-W			(switchable)				
KLQ-CO2-W	–	–	0…2000 / 5000 ppm	0…100 %	W		1501-8111-7301-200
KLQ-CO2-W-DISPLAY	–	–	0…2000 / 5000 ppm	0…100 %	W	■	1501-8111-7371-200
KFTM-CO_2-W			(switchable)				
KFTM-CO2-W	0…100 % r.H.	–35…+80 °C	0…2000 / 5000 ppm	–	W		1501-8116-7301-200
KFTM-CO2-W-DISPLAY	0…100 % r.H.	–35…+80 °C	0…2000 / 5000 ppm	–	W	■	1501-8116-7371-200
KFTM-LQ-CO_2-W			(switchable)				
KFTM-LQ-CO2-W	0…100 % r.H.	–35…+80 °C	0…2000 / 5000 ppm	0…100 %	W		1501-8118-7301-200
KFTM-LQ-CO2-W DISPLAY	0…100 % r.H.	–35…+80 °C	0…2000 / 5000 ppm	0…100 %	W	■	1501-8118-7371-200
Outputs:	**0-10 V or 4…20 mA** (selectable via DIP switches, selected variant applies for all outputs) – *Standard* duct sensor **KTM-CO_2-SD** with fixed output 0-10 V!						
Equipment:	**W = changeover contact** – *Standard* duct sensor **KTM-CO_2-SD** without changeover contact!						
Note:	This unit **must not** be used as safety-relevant device!						

ACCESSORIES		
SF-M	**Metal** sinter filter, Ø 16 mm, L = 32 mm, exchangeable stainless steel **V4A** (1.4404)	7000-0050-2200-100

RHEASGARD® KLGF
RHEASREG® KLSW

Duct airflow monitors, including mounting flange, electronic, one-step and two-step, with active / switching output

S+S REGELTECHNIK

The electronic airflow monitor **RHE**ASGARD® **KLGF** measures the flow velocity in m / s and converts the measurement signal into a standard signal of 0 - 10 V (flow measuring transducer). This flow sensor is optionally available with or without display.

RHEASREG® **KLSW** provided with a switching output (one-step or two-step) is designed as flow sensor / flow monitor. Fine adjustment of the upper range limit by the user is possible at a potentiometer.

The airflow monitor / airflow sensor is used for monitoring or controlling airflows in ducts, at ventilators and dampers, for flow-dependent monitoring of humidifiers and electric heating registers according to DIN 57100, part 420, or for use in connection with DDC systems.

KLSW-xx



KLGF-1
with display



TECHNICAL DATA

Power supply:	24 V AC / DC or 230 V AC +5 / -13 %, 50...60 Hz
Output:	1 or 2 potential-free relays (changeover contacts), 8 A, max. 2 kW or 0 - 10 V (relative, linearised on request), see table
Current consumption:	approx. 3 VA
	KLGF-1, KLSW-3, KLSW-4:
Measuring range:	0.1...30 m/s
Sensitivity:	0.1...30 m/s (adjustable)
Switching hysteresis:	2 % (permanently set)
	KLSW-6:
Measuring range:	0.1...15 m/s
Sensitivity:	0.1... 5 m/s (adjustable)
Switching hysteresis:	approx. 1...10 % (adjustable)
Start bridging:	approx. 15...120 s (adjustable)
Switch-off delay:	approx. 2...20 s (adjustable)
Max. sensor cable length:	50 m, avoid laying parallel with mains voltage-carrying lines, or use shielded cables, minimum cross section 1.5 mm² per conductor, apply cable screen one-sided
Ambient temperature:	0...+60 °C at the device; 0...+80 °C medium
Medium:	pollutant-free, non-precipitating air
Sensor:	sensor breakage protection, temperature-compensated
Enclosure:	plastic, UV-stabilised, material polyamide, 30 % glass-globe reinforced, colour traffic white (similar to RAL 9016) **KLSW-xx, KLGF-1 with display:** 108 x 70 x 73.5 mm (Thor 2) **KLGF-1 without display:** 72 x 64 x 37.8 mm (Tyr 1), with quick-locking screws (slotted / Phillips head combination)
Cable gland:	M 16 x 1.5; including strain relief, exchangeable, max. inner diameter 10.4 mm
Protective tube:	metal (brass, nickel-plated), Ø 10 mm, nominal length NL = 140 mm
Process connection:	by mounting flange (included in the scope of delivery)
Electrical connection:	0.14 - 1.5 mm², via screw terminals
Protection class:	II (according to EN 60 730) at KLSW 3 (UB = 230 V AC) III (according to EN 60 730) at UB = 24 V
Protection type:	IP 65 (according to EN 60 529)
Standards:	CE conformity, EMC directive 2014 / 30 / EU, low-voltage directive 2014 / 35 / EU

Schematic diagram **KLSW-6**

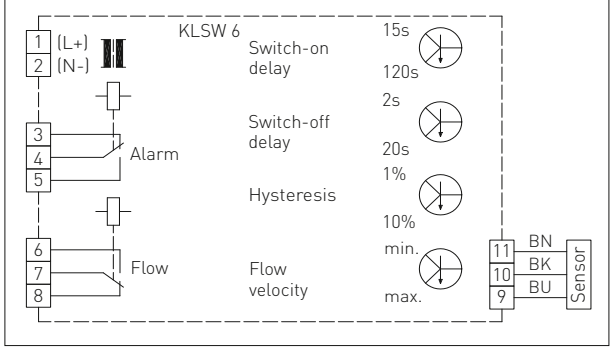

Schematic diagram **KLGF-1**

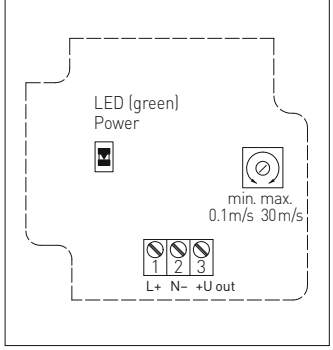

Schematic diagram **KLSW-3**
KLSW-4

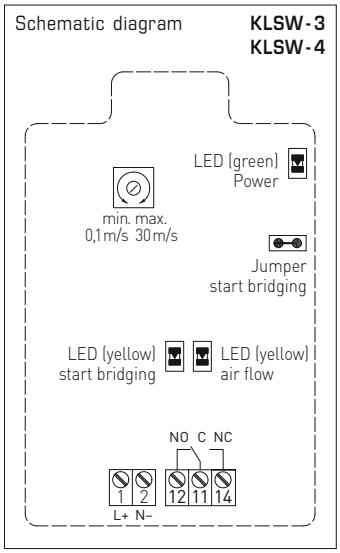

Dimensional drawing

KLGF-1 without display (compact)

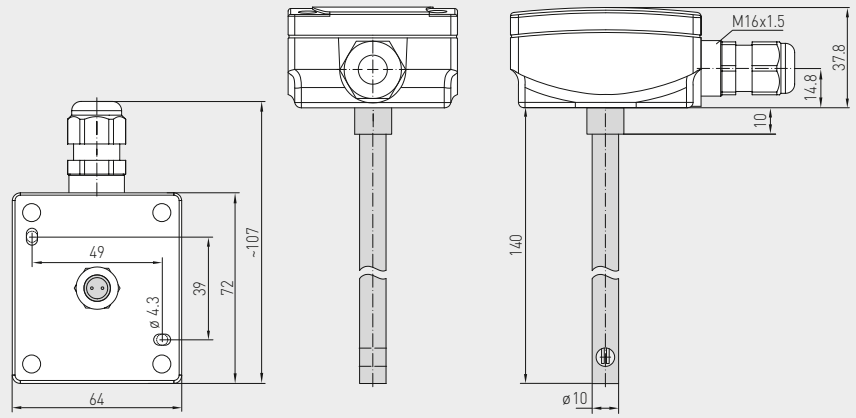

KLGF-1
without display
(compact)



Dimensional drawing

KLSW-xx
KLGF-1 with display

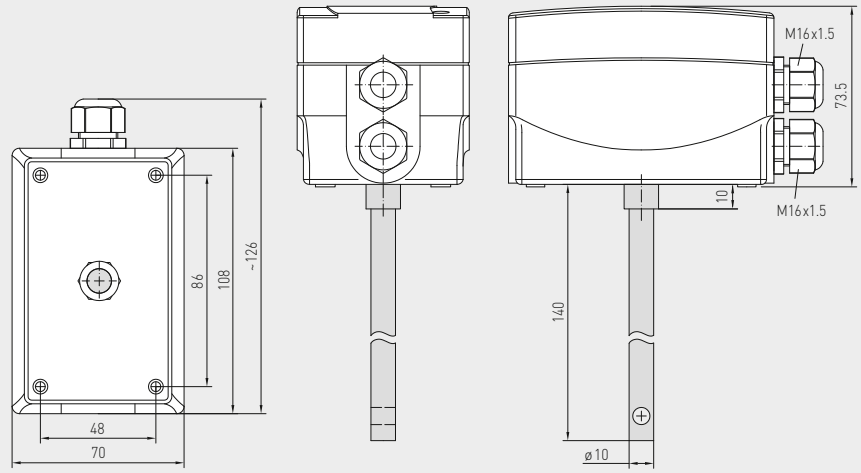

Dimensional drawing **MF-14-K**

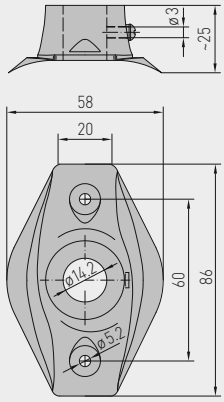

RHEASGARD® KLGF Duct airflow monitors
RHEASREG® KLSW Duct airflow monitors, one-step and two-step

Type / WG01	Relay (Steps)	Power-Supply	Output	Display	Item No.
KLGF					
KLGF 1	–	24 V AC / DC	0-10 V (relative)		1701-3120-1000-000
KLGF 1_Display	–	24 V DC	0-10 V (linearised)	■	on request
KLSW	**one-step**				
KLSW 3	1	230 V AC	1 x Changeover contact		1701-3011-0001-000
KLSW 4	1	24 V AC / DC	1 x Changeover contact		1701-3021-0000-000
KLSW	**two-step**				
KLSW 6	2	24 V AC / DC	2 x Changeover contact		1701-3022-0000-000
Note:	**KLSW 6** is supplied as standard with a **manual reset button**! **Automatic reset** (without reset button)				on request

**Vane switch, mechanical, with paddle,
with switching output**

S+S REGELTECHNIK

Mechanical paddle vane switch, paddle switch, flow sensor or vane switch relay **RHE**ASREG® **WFS**. It is used for flow monitoring of gaseous, non-aggressive media in ventilation and air conditioning ducts, in air intake and exhaust devices of ventilators or electric heating registers (also for contaminated, oily air), or as flow controller and airflow monitor.

WFS



TECHNICAL DATA	
Switching capacity: (Contact load)	15 (8) A; 24...250 V AC at 24 V AC min. 150 mA
Contact:	dustproof microswitch as potential-free single-pole changeover contact
Enclosure:	plastic, UV-stabilised, material polyamide, 30 % glass-globe reinforced, colour traffic white (similar to RAL 9016)
Enclosure dimensions:	108 x 70 x 73.5 mm (Thor 2)
Base body:	galvanised steel
Moving arm:	brass
Vane:	stainless steel **V2A** (1.4301)
Cable gland:	M 20 x 1.5; including strain relief
Enclosure temperature:	–40...+85 °C
Operating difference:	≥ 1 m / s
Electrical connection:	0.14 - 1.5 mm², via screw terminals
Protection class:	I (according to EN 60 730)
Protection type:	IP 65 (according to EN 60 529)
Standards:	CE conformity, EMC directive 2014 / 30 / EU, low-voltage directive 2014 / 35 / EU
FUNCTION	
Monitor:	Contact 1 - 3 breaks when flow rate drops to the preset value. Simultaneously, contact 1 - 2 closes and can be used as signal contact. Device is factory-set to the minimum switch-off value, which can be increased by turning the range adjusting screw clockwise.
Installation:	vertical in horizontal air ducts. Min. smoothing distance = 5 x duct diameter upstream and downstream of vane. For airspeeds > 5 m / s, vane is to be trimmed at the marked spots. Thereby the minimum switch-off value increases to approx. 2.5 m / s and the minimum switch-on value to approx. 4 m / s.

Connecting diagram **WFS**

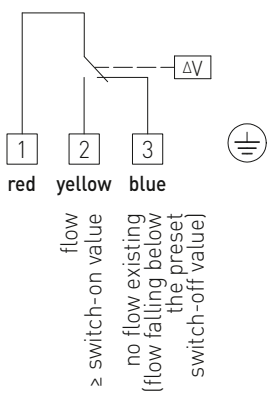

Dimensional drawing

WFS

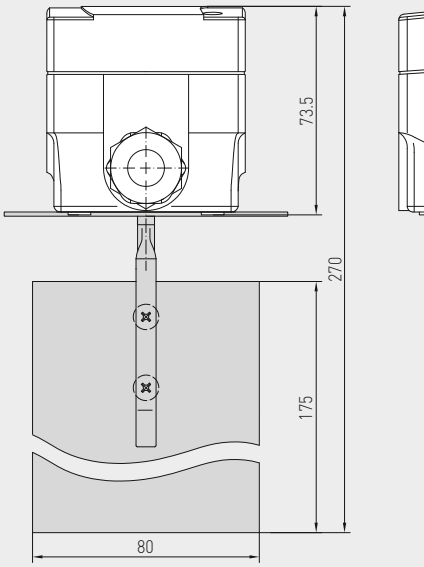

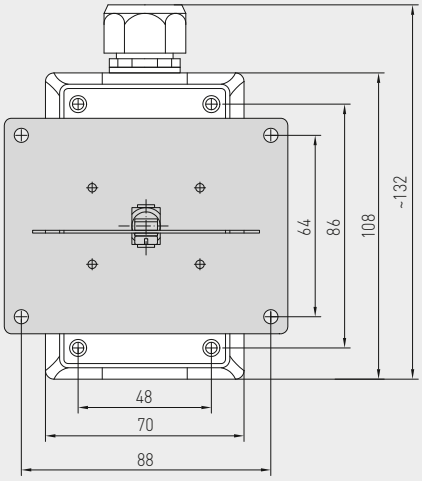

WFS



RHEASREG® WFS	Vane switch, mechanical, with paddle				
Type / WG01	**Switch-on value**		**Switch-off value**		**Item No.**
	min.	**max.**	**min.**	**max.**	
WFS					
WFS-1E	2.5 m/s	9.2 m/s	1 m/s	8 m/s	1702-3020-0000-000
Spare part					
PWFS-08	Spare paddle for WFS (Stainless steel vane)				7700-0010-2000-000

Flow monitors, mechanical, with paddle, with switching output

S+S REGELTECHNIK

Mechanical paddle flow monitor **RHE**ASREG® **SW**. This flow sensor is applicable for flow monitoring of liquid and gaseous non-aggressive media in pipes and in hydraulic systems from ½'' through ¾'' up to 8" in diameter, furthermore used as flow control instrument or as water failure protection switch, e.g. for pumps in oil circulation and cooling systems, in evaporators, compressors and heat exchangers, with brass or stainless steel body.

SW





SW-3E
SW-4E
Incl. attached Tee Fitting according to DIN 2950

TECHNICAL DATA

Switching capacity:	15 (8) A; 24...250 V AC, at 24 V AC min. 150 mA
Contact:	dustproof microswitch as potential-free single-pole changeover contact
Enclosure:	plastic, UV-stabilised, material polyamide, 30 % glass-globe reinforced, colour traffic white (similar to RAL 9016)
Enclosure dimensions:	108 x 70 x 73.5 mm (Thor 2)
Base body:	galvanised steel
Screwed socket:	brass or stainless steel (see table)
Paddle:	stainless steel **V4A** (1.4401)
Cable gland:	M 20 x 1.5; including strain relief
Enclosure temperature:	–40...+85 °C
Max. temperature of medium:	+120 °C
Electrical connection:	0.14 - 1.5 mm², via screw terminals
Protection class:	I (according to EN 60 730)
Protection type:	IP 65 (according to EN 60 529)
Standards:	CE conformity, EMC directive 2014 / 30 / EU, low-voltage directive 2014 / 35 / EU
FUNCTION	
Monitor:	Contact COM – NO (red – yellow) breaks when flow rate drops to the preset value. Simultaneously, contact COM – NC (red - blue) closes and can be used as signal contact. Device is factory-set to the minimum switch-off value, which can be increased by turning the range adjusting screw clockwise.
Installation:	vertical in horizontal pipes, tee R x'' according to DIN 2950, min. smoothing distance = 5 x pipe diameter upstream and downstream of paddle

Table of switching values

Pipe Ø DN in inches	**Factory Setting OFF / ON** (m³/h)	**Max. Setting OFF / ON** (m³/h)
SW-1 / SW-2		
1"	0.6 / 1.0	2.0 / 2.1
1 ¼"	0.8 / 1.3	2.8 / 3.0
1 ½"	1.1 / 1.7	3.7 / 4.0
2"	2.2 / 3.1	5.7 / 6.1
2 ½"	2.7 / 4.0	6.5 / 7.0
3"	4.3 / 6.2	10.7 / 11.4
4"	11.4 / 14.7	27.7 / 29.0
4" Z	6.1 / 8.0	17.3 / 18.4
5"	22.9 / 28.4	53.3 / 55.6
5" Z	9.3 / 12.9	25.2 / 26.8
6"	35.9 / 43.1	81.7 / 85.1
6" Z	12.3 / 16.8	30.6 / 32.7
8"	72.6 / 85.1	165.7 / 172.5
8" Z	38.6 / 46.5	90.8 / 94.2
SW-3 / SW-4		
½"	0.174 / 0.48	0.846 / 0.948
¾"	0.138 / 0.408	0.768 / 0.858

Connecting diagram **SW**

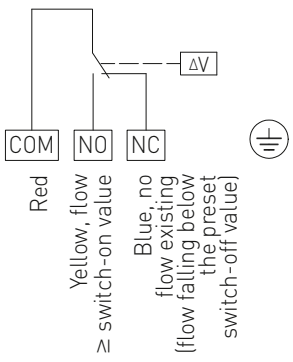

Dimensional drawing

SW
PSW-09

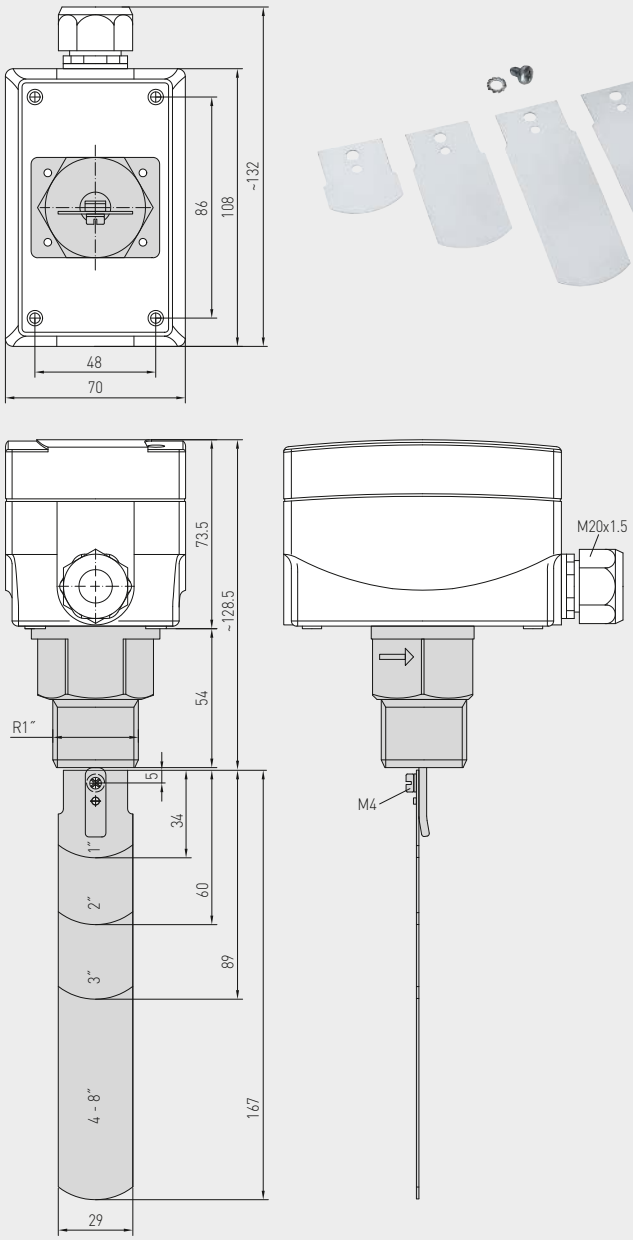

SW



PSW-09
Set of stainless steel paddles (Spare part)

Pipe diameters with paddle combinations

Pipe Ø DN in inches	in mm	Paddle combination PSW-09
½"	15 mm	**1**
¾"	20 mm	**1**
1"	25 mm	**1**
1 ¼"	32 mm	**1**
1 ½"	40 mm	**1**
2"	50 mm	**1, 2**
2 ½"	65 mm	**1, 2**
3"	80 mm	**1, 2, 3**
4" Z	100 mm	**1, 2, 3** plus **4** (shorten to 92 mm)
5" Z	125 mm	**1, 2, 3** plus **4** (shorten to 117 mm)
6" Z	150 mm	**1, 2, 3** plus **4** (shorten to 143 mm)
7 - 8" Z	200 mm	**1, 2, 3** plus **4** (unshortened)

RHEASREG® SW Flow monitors, mechanical, with paddle

Type / WG01	Pipe Ø DN	Max. Operating Pressure PN max	Medium	(Contacting Parts Made of)	Incl. attached Tee Fitting according to DIN 2950	Item No.
SW						
SW-1E	1" - 8"	**11 bar**	**normal**	(brass)	–	1702-3011-0000-000
SW-2E	1" - 8"	**30 bar**	**aggressive**	(stainless steel **V4A**)	–	1702-3012-0101-000
SW-3E	½"	**11 bar**	**normal**	(brass)	⊥⊥	1702-3013-0031-000
SW-4E	¾"	**11 bar**	**normal**	(brass)	⊥⊥	1702-3014-0041-000
Spare part						
PSW-09	Set of **stainless steel paddles** 1-8" (4 pieces)					7700-0010-1000-000
Note:	**Z** = Fourth paddle included in the scope of delivery to be used in addition to the three paddles already factory-mounted (**1, 2, 3** plus **4**)!					



Radio Sensors

KYMASGARD®, the radio transmission range of our product lines, helps you achieve significant savings. Without additional energy costs, these devices minimize your wiring needs and provide cost savings even at the very installation level. **KYM**ASGARD® combines appealing aesthetics with a host of application possibilities. A thoroughly clever solution!

APPLICATION RANGE

> Reconstruction of facilities
> Modernization and extension of offices, hotels and residential buildings
> Listed, historical and sacred buildings under monumental protection
> Schools, museums and hospitals
> Industrial buildings and administration centers



KYMASGARD®

442 – 471

EnOcean radio transmitters / KYMASGARD® 9000

BC-9000	Operating controller	**447**
RFTM-xx-FSE	Multifunctional room radio sensor for humidity, temperature, air quality (VOC), and motion/presence	**449**

EnOcean radio transmitters

RTF2-FSE	Room temperature radio sensor	**450**
RFTF2-FSE	Room humidity and temperature radio sensor	**450**
RTF2-FSE-P	Room temperature radio sensor	**451**
RFTF2-FSE-P	Room humidity and temperature radio sensor	**451**
RTF2-FSE-PT	Room temperature radio sensor	**452**
RFTF2-FSE-PT	Room humidity and temperature radio sensor	**452**
RTF2-FSE-PD	Room temperature radio sensor	**453**
RFTF2-FSE-PD	Room humidity and temperature radio sensor	**453**
RTF2-FSE-PDT	Room temperature radio sensor	**454**
WT-FSE	Wall pushbutton	**455**
FK-1-FSE	Door and window contact unit	**457**
HT4-FSE	Hand-held remote control unit	**456**
IN400-FSE-UP	Pushbutton interface, in-wall	**466**
AFTF-HK-FSE	Multifunctional outside radio sensor for humidity, temperatures and light intensity	**470**
AWFS-HK-FSE	Multifunctional outside radio sensor for wind strength and light intensity	**471**

EnOcean radio signal receivers / actuators, in-wall

JA100-FEM-UP	Venetian blind actuator, in-wall	**461**
DA100-FEM-UP	Dimmer actuator, in-wall	**460**
SA100-FEM-UP	Switching actuator, in-wall	**462**
SA200-FEM-UP	Switching actuator, in-wall	**463**
TA100-FEM-UP	Thermostat actuator, in-wall	**464**
TA200-FEM-UP	Thermostat actuator, in-wall	**465**

EnOcean radio transmitters / actuators, on-wall

JA200-FEM-AP	Venetian blind actuator, on-wall	**467**
SA400-FEM-AP	Switching actuator, on-wall	**468**
SV600-FEM-AP	Dimmer actuator, on-wall	**469**

EnOcean communication

USB-FEM	Communications USB flash drive	**458**

EnOcean Gateway

GW-RS485-FEM	Gateway for RS485 bus	**459**

Radio Sensors

MADE IN GERMANY

KYMASGARD® – Intelligent radio sensor equipment for multifunctional requirements

Broad Spectrum

Our product line for wireless radio installations using EnOcean technology are designed to be multifunctional. This reduces the diversity of types and expands their possible applications. Thanks to microprocessor technology, almost any measuring range can be represented, including custom specifications. The bus addresses are adjustable via DIP switches.

Optimum Precision

All devices are developed, manufactured and tested according to the latest criteria. Each sensor is precisely re-adjustable using offset potentiometers. Take advantage of our experience, our development, manufacturing and product know-how and order these products directly from the manufacturer.

enocean®

Approved Safety

RoHS conforming materials

ESD compliant manufacturing

CE compliance tested by external laboratories

Certified Quality

Our development and production in Nuremberg/Germany is certified by TÜV Thüringen according to DIN EN ISO 9001:2015.

GOST certificates

EAC certified

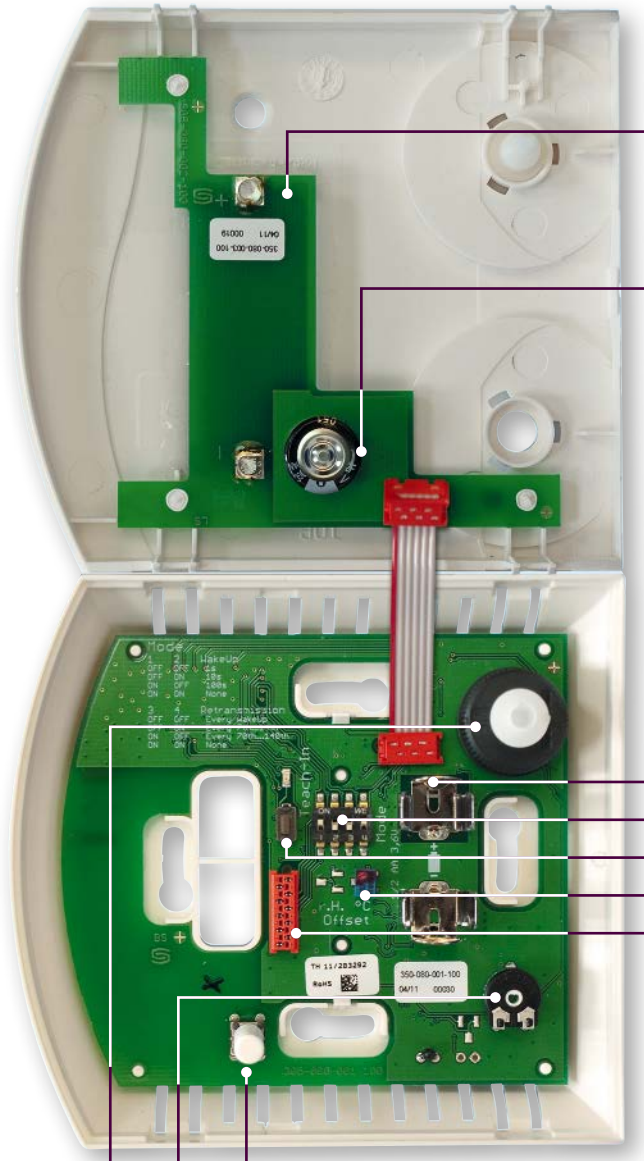

Extra-large Solar Cell

With solar generator for energy supply, battery-free, maintenance-free

Goldcap

For energy store (internal)

Optional Battery Operation

Change-over to lithium cell based energy supply at times of poor ambient light

1

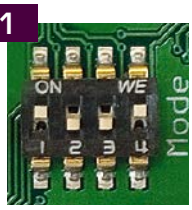

DIP Switches

For multi-range switching and setting of measureing and transmission cycle

2



Teach-In

For teaching the sensor and establishing connection between transmitter and receiver

3



Offset Potentiometer

For fine adjustment (zero point offset) and readjustment upon recalibration

4

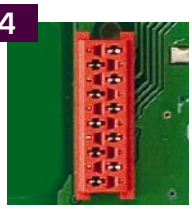

Quality Assurance

Calibration and balancing are done by means of the bus system

Presence Pushbutton

Setpoint Actuator (Potentiometer)

Control Element (Rotary Switch)



NEW

S+S REGELTECHNIK

Compatibility overview for products with EnOcean technology

	CONTROLLERS / ACTUATORS / GATEWAYS												
	BC-9000	SA400-FEM-AP	JA200-FEM-AP	SV600-FEM-AP	IN400-FSE-UP	SA100-FEM-UP	SA200-FEM-UP	TA100-FEM-UP	TA200-FEM-UP	DA100-FEM-UP	JA100-FEM-UP	GW-RS485-FEM	USB - FEM
KYMASGARD® 9000 system													
BC-9000	–											●	●
RFTM-FSE	●						●	●	●			●	●
RFTM-FSE-ST	●						●	●	●			●	●
RFTM-VOC-FSE	●											●	●
RFTM-BW-FSE	●	●		●		●	●	●	●			●	●
Frija ROOM CONTROL UNITS													
RTF2-FSE												●	●
RFTF2-FSE												●	●
RTF2-FSE-P				●				●	●			●	●
RFTF2-FSE-P												●	●
RTF2-FSE-PT												●	●
RFTF2-FSE-PT												●	●
RTF2-FSE-PD2												●	●
RTF2-FSE-PD5												●	●
RFTF2-FSE-PD2												●	●
RTF2-FSE-PD5T												●	●
WINDOW CONTACT													
FK-FSE-xx	●	●	●	●		●	●				●	●	●
WALL PUSHBUTTON													
WT-FSE-xx	●	●		●				●	●	●		●	●
WT-FSE-Oxx I-○	●	●						●	●	●		●	●
WT-FSE-Vxx △-▽	●		●								●	●	●
MANUAL PUSHBUTTON													
HT-FSE-xx	●	●	●	●		●	●	●	●	●	●	●	●
OUTSIDE SENSOR													
AFTF-HK-FSE	●											●	●
AWSF-HK-FSE	●		●								●	●	●

● = optimum compatibility

The **radio bus system KYM**ASGARD® **9000** is an open field bus system based on EnOcean technology and is used for wireless linking of centrally and peripherally mounted radio transmitters and receivers to enable control, operation and regulation of lighting, shading, heating, ventilation, security, etc. in converted and newly constructed apartments, houses, commercial/functional buildings. The product range consists of batteryless and wireless radio sensors, and radio receivers for surface/flush mounting or for installation in a distribution box. All devices can easily be integrated into third-party systems such as KNX, LON and Ethernet (using standard protocols) via gateways.

The **radio sensors** record information and send it wirelessly as a radio telegram to the radio receivers. Radio sensors include wall-mounted transmitters, temperature sensors or the push-button interface. Batteryless sensors are completely self-sufficient in terms of energy. They do not require any cables and can be installed almost anywhere.
The energy is generated either by pressing a button (piezo or induction principle) or by means of a solar cell which converts room light into electrical energy.

The **radio receivers / actuators** evaluate the radio sensor telegrams and convert them into switching, dimming or blind movement signals. Radio receivers include, for example, the single channel switching actuator or the 4-channel blind actuator. The radio receivers are connected to the electrical mains and can be used for switching lamps, sockets and other things, such as garage doors. Using a simple teach-in procedure, it is possible to teach in up to 30 different sensors (push-buttons, sensors, motion detectors and window contacts) and to configure the additional functions. The receivers evaluate the radio telegrams received and execute the corresponding switching actions.

Optional accessories include the wall holder **WH-3100**, and the stand holders **SH-9110** for operating controllers (Ø 130 mm) and **SH-3110** for room radio sensors (Ø 90 mm), which enable them to be used as table-top units.

BC-9000
Operating controller
(Ø 130 mm)



BC-9000
with stand holder
(optional)



SH-9110
Stand holder
(optional)



The **operating controller KYM**ASGARD® **BC-9000** serves as a bidirectional control centre for operating, monitoring and commissioning radio sensors and actuators.

TECHNICAL DATA

Operating mode:	receiving (from up to 127 radio transmitters) and transmitting of radio telegrams according to EnOcean standard
Rated voltage:	Power supply unit 10...30 V DC, 4 A
Radio module:	TCM320
Fusing:	none
Interface:	EnOcean radio / WLAN
Operating elements:	Touch screen, approx. 60 x 45 mm (W x H)
Enclosure:	plastic, material: ABS, colour: pure white (similar to RAL 9010)
Dimensions:	Ø 130 mm, height 18 mm
Mounting:	Wall-mounted or free-standing using accessories
Ambient temperature:	–5...+40 °C (in operation)
Storage temperature:	–25...+60 °C
Permitted humidity:	0...90 % r.H., non-precipitating air
Protection class:	III (according to EN 60 730)
Protection type:	IP 30 (according to EN 60 529)
Standards:	CE conformity according to EMC Directive 2014 / 30 / EU and according to R&TTE Directive 2014 / 53 / EU

KYMASGARD® BC-9000 Room operating controller

Type / WG02	Channels	Type	Energy Generation	Item no.
BC-9000				
BC-9000	127	Bidirectional	Power supply unit	1801-7429-0052-300
ACCESSORIES				
SH-9120	**Stand holder** for operating controller (Ø 130 mm)			1801-8490-3000-000
WH-3100	**Wall holder** for operating controller (Ø 130 mm) and room radio units (Ø 90 mm)			1801-8490-1000-000
Compatibility	For an overview, see the start of the chapter			

KYMASGARD® RFTM-xx-FSE

Multi-functional room radio sensors / room control units with solar cell for temperature, humidity, air quality (VOC) and motion / presence

Radio bus system KYMASGARD® 9000

NEW

S+S REGELTECHNIK

The room radio sensors of the radio bus system **KYM**ASGARD® **9000** are maintenance-free radio transmitters that function without batteries. Energy generation is effected by conversion of indoor room light into electric energy by means of a solar generator. If the ambient light is too low for power generation, the sensors can optionally be powered by two AAA batteries (not included).
These sensors are used to detect the indoor climate and the setpoint values, and to transmit the recorded values to radio actuators and radio signal receivers / gateways via radio signals. The following device configurations are available:

The room sensor **KYM**ASGARD® **RFTM-FSE** is used to measure room temperature and room humidity.

The room control unit **KYM**ASGARD® **RFTM-FSE-ST** is used to measure room temperature and humidity, and to display and set the setpoint for temperature.
The setpoint is set directly on site using touch buttons.

The room sensor **KYM**ASGARD® **RFTM-LQ-FSE** is used to measure room temperature, room humidity and air quality (VOC = Volatile Organic Compounds).

The room sensor **KYM**ASGARD® **RFTM-BW-FSE** is used to measure room temperature, room humidity and the movement (or presence) of persons.

Optional accessories include the wall holder **WH-3100** and the stand holder **SH-3110**, which enable them to be used as table-top units.

Room devices
(Ø 90 mm)
with stand holder
(optional)



TECHNICAL DATA

Operation:	Energy generation by solar cell, batteryless, maintenance-free (optionally battery-operated)
Radio technology:	EnOcean protocol, modulation ASK, 868 MHz, transmission power max. 10 mW, telegram type 4BS
Channels:	1 temperature, 1 humidity, 1 setpoint, 1 air quality (VOC), 1 motion/presence
Radio transmitter module:	EnOcean Dolphin
Measurand acquisition:	adjustable, every 1 s / 10 s / 100 s
Transmission interval:	adjustable, typically every 100 seconds, or at any measuring value change, status telegram approximately every 16 minutes
Range of coverage:	indoors typically 30 - 100 m, outdoors up to 300 m
Enclosure:	plastic, material: ABS, colour: pure white (similar to RAL 9010)
Dimensions:	Ø 88 mm, height 18 mm
Mounting:	Wall-mounted or free-standing using accessories
Ambient temperature:	–5...+55 °C
Storage temperature:	–25...+60 °C
Permitted humidity:	0...90 % r.H., non-precipitating air
Protection class:	III (according to EN 60 730)
Protection type:	IP 30 (according to EN 60 529)
Standards:	CE conformity according to EMC Directive 2014 / 30 / EU and according to R&TTE Directive 2014 / 53 / EU
HUMIDITY	
Operating range, humidity:	0...100 % r. H.
Deviation in humidity:	typically **± 2.0** % (20...80 % r. H.) at +25 °C, otherwise ± 3.0 %
TEMPERATURE	
Operating range, temperature:	0...+40 °C
Deviation in temperature:	typically ± 0.2 K at +25 °C
AIR QUALITY (VOC)	
VOC measuring range:	0...100 % air quality; with reference to calibration gas
VOC measuring accuracy:	± 20 % final value (with reference to the calibration gas)
MOTION	
Detection:	yes/no (motion + presence)
SETPOINT / DISPLAY	
Operating elements:	The setpoint for temperature can be set and displayed on a touch panel.

SH-3110
Stand holder
(optional)



WH-3100
Wall holder
(optional)



Multi-functional room radio sensors / room control units with solar cell for temperature, humidity, air quality (VOC) and motion / presence

Radio bus system KYMASGARD® 9000

RFTM-FSE-ST
Room control unit



RFTM-FSE
RFTM-LQ-FSE
Room radio sensors



RFTM-BW-FSE
Room radio sensors



KYMASGARD® RFTM-FSE	Room radio sensor / room control unit for temperature and humidity
KYMASGARD® RFTM-LQ-FSE	Room radio sensor for temperature, humidity and air quality (VOC)
KYMASGARD® RFTM-BW-FSE	Room radio sensor for temperature, humidity and motion / presence detection

Type / WG02	Channels	Measuring ranges / detection				Setpoint	Item no.
		Temperature	Humidity	VOC	Movement		
RFTM-FSE							
RFTM-FSE	2	0...+40 °C	0...100 % r.H.	–	–	–	1801-4280-0000-000
RFTM-FSE ST	3	0...+40 °C	0...100 % r.H.	–	–	●	1801-4280-0869-000
RFTM-LQ-FSE							
RFTM-LQ-FSE	4	0...+40 °C	0...100 % r.H.	0...100 %	–	–	1801-4280-3000-000
RFTM-BW-FSE							
RFTM-BW-FSE	3	0...+40 °C	0...100 % r.H.	–	yes / no	–	1801-4280-4000-000
Equipment:	The **setpoint** for temperature and humidity can be set via the operating and display elements.						

ACCESSORIES		
SH-3110	**Stand holder** for room radio units (Ø 90 mm)	1801-8490-2000-000
WH-3100	**Wall holder** for room radio units (Ø 90 mm and Ø 130 mm)	1801-8490-1000-000
Compatibility	For an overview, see the start of the chapter	

KYMASGARD® RTF 2 - FSE
KYMASGARD® RFTF 2 - FSE

Wireless room humidity and temperature radio sensors with solar cell

S+S REGELTECHNIK

The room temperature sensors **KYM**ASGARD® **RTF 2 - FSE** or **RFTF 2 - FSE** are batteryless and maintenance-free radio transmitters. Energy generation is effected by conversion of indoor room light into electric energy by means of a solar generator. These sensors are used to detect the room temperature or room humidity and to transmit the measurands via radio frequency to radio actuators and radio signal receivers / gateways. If ambient light conditions are insufficient for energy generation, they also can be operated on a lithium battery.
To do so, insert the lithium cell into the battery holder provided.
The device IDs are marked on a label in the device.

RTF 2 - FSE
RFTF 2 - FSE



TECHNICAL DATA

Operation:	Energy generation by solar cell, batteryless, maintenance-free (optionally battery-operated)
Radio technology:	EnOcean protocol, modulation ASK, 868 MHz, transmission power max. 10 mW, telegram type 4BS
Channels:	1 temperature, 1 humidity
Radio transmitter module:	EnOcean Dolphin
Measuring range, temperature:	0...+40 °C
Deviation, temperature:	typically ± 0.2 K at +25 °C
Measuring range, humidity:	0...100 % r. H.
Deviation humidity:	typically ± 3 % r.H. (30... 80 %) at +20 °C
Measurand acquisition:	adjustable, every 1 s / 10 s / 100 s
Transmission interval:	adjustable, typically every 100 seconds, or at any measuring value change, status telegram approximately every 16 minutes
Range of coverage:	indoors typically 30 - 100 m, outdoors up to 300 m
Enclosure:	plastic, material ABS, colour pure white (similar to RAL 9010)
Dimensions:	98 x 106 x 32 mm (Frija 2)
Mounting:	wall mounting or on in-wall flush box Ø 55 mm, base with 4-hole for mounting on vertically or horizontally installed in-wall flush boxes
Ambient temperature:	–5...+55 °C
Storage temperature:	–25...+60 °C
Humidity:	0...90 % r.H., non-precipitating air
Protection class:	III (according to EN 60 730)
Protection type:	IP 30 (according to EN 60 529)
Standards:	CE conformity according to EMC directive 2014 / 30 / EU and according to R&TTE directive 2014 / 53 / EU

Dimensional drawing

RTF 2 - FSE
RFTF 2 - FSE

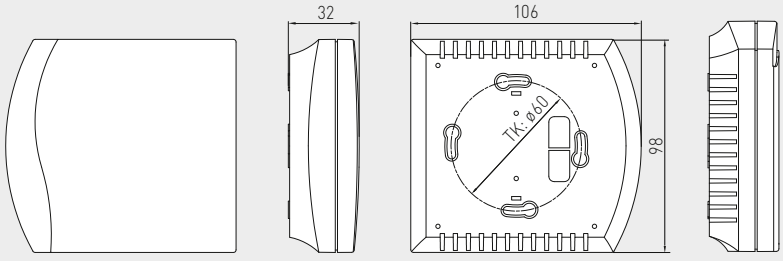

Schematic diagram

RTF 2 - FSE
RFTF 2 - FSE

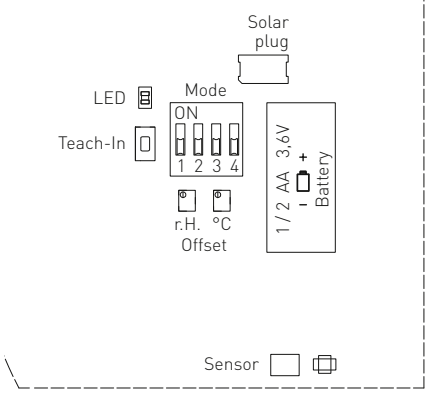

KYMASGARD® **RTF 2 - FSE** / **KYM**ASGARD® **RFTF 2 - FSE**	Room temperature radio sensors Wireless room humidity and temperature radio sensors			
Type / WG02	**Channels**	**Measuring Range** Temperature	Humidity	**Energy Generation**	**Item No.**
RTF2-FSE	1	0...+40 °C	–	Solar cell, battery	1801-4451-0040-040
RFTF2-FSE	2	0...+40 °C	0...100 % r.H.	Solar cell, battery	1801-4452-3040-040
Accessories					
ET BATTERIE	**Lithium battery** LS 14250				7000-4000-5000-000
Compatibility	For an overview, see the start of the chapter				

The room temperature sensor **KYM**ASGARD® **RTF 2 - FSE - P** or **RFTF 2 - FSE - P** is a batteryless and maintenance-free radio transmitter. Energy generation is effected by conversion of indoor room light into electric energy by means of a solar generator. These sensors are used to detect the room temperature or room humidity as well as for setpoint setting and to transmit the measurands via radio frequency to radio actuators and radio signal receivers / gateways. If ambient light conditions are insufficient for energy generation, they also can be operated on a lithium battery. To do so, insert the lithium cell into the battery holder provided. The device IDs are marked on a label in the device.

RTF 2 - FSE - P
RFTF 2 - FSE - P



TECHNICAL DATA

Operation:	Energy generation by solar cell, batteryless, maintenance-free (optionally battery-operated)
Radio technology:	EnOcean protocol, modulation ASK, 868 MHz, transmission power max. 10 mW, telegram type 4BS
Channels:	1 temperature, 1 humidity, 1 setpoint
Radio transmitter module:	EnOcean Dolphin
Measuring range, temperature:	0...+40 °C
Deviation, temperature:	typically ± 0.2 K at +25 °C
Measuring range, humidity:	0...100 % r.H.
Deviation humidity:	typically ± 3 % r.H. (30... 80 %) at +20 °C
Setpoint capture:	turning angle left 0° = 0 bits turning angle right 220° = 255 bits
Measurand acquisition:	adjustable, every 1 s / 10 s / 100 s
Transmission interval:	adjustable, typically every 100 seconds, or at any measuring value change, or change of turning angle status telegram approximately every 16 minutes
Range of coverage:	indoors typically 30 - 100 m, outdoors up to 300 m
Enclosure:	plastic, material ABS, colour pure white (similar to RAL 9010)
Dimensions:	98 x 106 x 34 mm (Frija 2)
Mounting:	wall mounting or on in-wall flush box Ø 55 mm, base with 4-hole for mounting on vertically or horizontally installed in-wall flush boxes
Ambient temperature:	–5...+55 °C
Storage temperature:	–25...+60 °C
Humidity:	0...90 % r.H., non-precipitating air
Protection class:	III (according to EN 60 730)
Protection type:	IP 30 (according to EN 60 529)
Standards:	CE conformity according to EMC directive 2014 / 30 / EU and according to R&TTE directive 2014 / 53 / EU

Dimensional drawing

RTF 2 - FSE - PT
RFTF 2 - FSE - PT

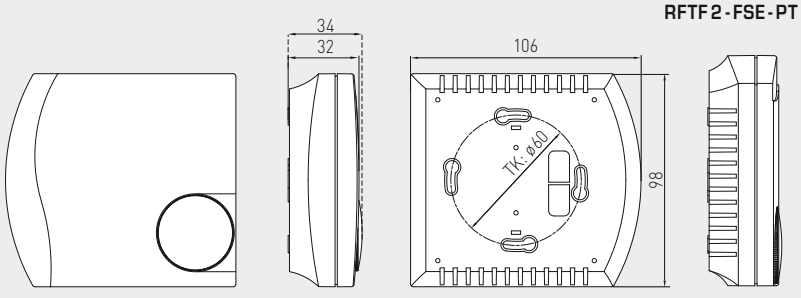

Schematic diagram

RTF 2 - FSE - P
RFTF 2 - FSE - P

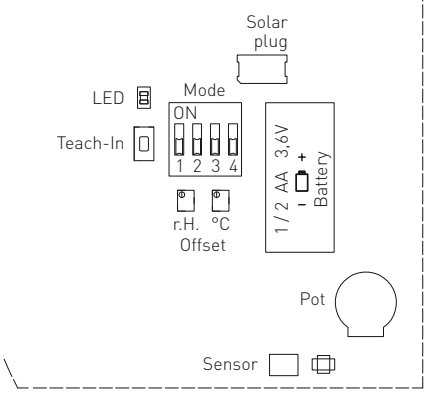

KYMASGARD® **RTF 2 - FSE - P** Room temperature radio sensors
KYMASGARD® **RFTF 2 - FSE - P** Wireless room humidity and temperature radio sensors

Type / WG02	Channels	Measuring Range Temperature	Measuring Range Humidity	Energy Generation	Item No.
RTF2-FSE-P	2	0...+40 °C	–	Solar cell, battery	1801-4451-0140-040
RFTF2-FSE-P	3	0...+40 °C	0...100 % r.H.	Solar cell, battery	1801-4452-0140-040
Accessories					
ET BATTERIE	**Lithium battery** LS 14250				7000-4000-5000-000
BG KNOPF	**Control knob** (4°C...34°C) for combination with **TA2-FEM**				7000-4030-0008-058
Compatibility	For an overview, see the start of the chapter				

KYMASGARD® RTF 2 - FSE - PT
KYMASGARD® RFTF 2 - FSE - PT

Wireless room humidity and temperature radio sensors with solar cell, setpoint setter, and push-button

S+S REGELTECHNIK

The room temperature sensor **KYM**ASGARD® **RTF 2 - FSE - PT** or **RFTF 2 - FSE - PT** is a batteryless and maintenance-free radio transmitter. Energy generation is effected by conversion of indoor room light into electric energy by means of a solar generator. These sensors are used to detect the room temperature or room humidity as well as for setpoint setting and to transmit the measurands via radio frequency to radio actuators and radio signal receivers / gateways. If ambient light conditions are insufficient for energy generation, they also can be operated on a lithium battery. To do so, insert the lithium cell into the battery holder provided. The device IDs are marked on a label in the device.

RTF 2 - FSE - PT
RFTF 2 - FSE - PT



TECHNICAL DATA

Operation:	Energy generation by solar cell, batteryless, maintenance-free (optionally battery-operated)
Radio technology:	EnOcean protocol, modulation ASK, 868 MHz, transmission power max. 10 mW, telegram type 4BS
Channels:	1 temperature, 1 humidity, 1 setpoint, 1 presence pushbutton
Radio transmitter module:	EnOcean Dolphin
Measuring range, temperature:	0...+40 °C
Deviation, temperature:	typically ± 0.2 K at +25 °C
Measuring range, humidity:	0...100 % r.H.
Deviation humidity:	typically ± 3 % r.H. (30... 80 %) at +20 °C
Setpoint capture:	turning angle left 0° = 0 bits turning angle right 220° = 255 bits
Measurand acquisition:	adjustable, every 1 s / 10 s / 100 s
Transmission interval:	adjustable, typically every 100 seconds, or at any measuring value change, or change of turning angle status telegram approximately every 16 minutes
Range of coverage:	indoors typically 30 - 100 m, outdoors up to 300 m
Enclosure:	plastic, material ABS, colour pure white (similar to RAL 9010)
Dimensions:	98 x 106 x 34 mm (Frija 2)
Mounting:	wall mounting or on in-wall flush box Ø 55 mm, base with 4-hole for mounting on vertically or horizontally installed in-wall flush boxes
Ambient temperature:	–5...+55 °C
Storage temperature:	–25...+60 °C
Humidity:	0...90 % r.H., non-precipitating air
Protection class:	III (according to EN 60 730)
Protection type:	IP 30 (according to EN 60 529)
Standards:	CE conformity according to EMC directive 2014 / 30 / EU and according to R&TTE directive 2014 / 53 / EU

Dimensional drawing

RTF 2 - FSE - PT
RFTF 2 - FSE - PT

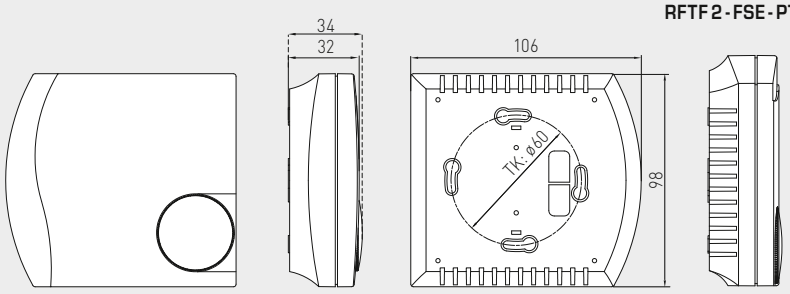

Schematic diagram

RTF 2 - FSE - PT
RFTF 2 - FSE - PT

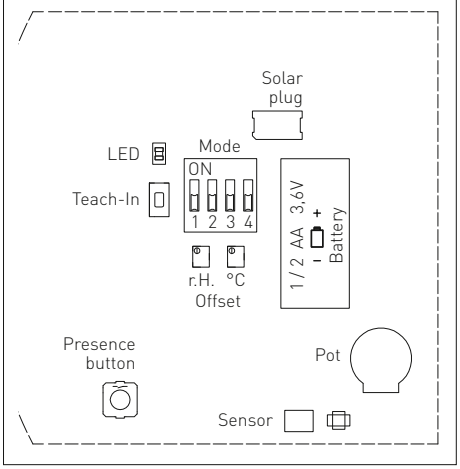

KYMASGARD® RTF 2 - FSE - PT – Room temperature radio sensors
KYMASGARD® RFTF 2 - FSE - PT – Wireless room humidity and temperature radio sensors

Type / WG02	Channels	Measuring Range Temperature	Measuring Range Humidity	Energy Generation	Item No.
RTF2-FSE-PT	3	0...+40 °C	–	Solar cell, battery	1801-4451-0440-040
RFTF2-FSE-PT	4	0...+40 °C	0...100 % r.H.	Solar cell, battery	1801-4452-0440-040
Accessories					
ET BATTERIE	**Lithium battery** LS 14250				7000-4000-5000-000
Compatibility	For an overview, see the start of the chapter				

Wireless room humidity and temperature radio sensors with solar cell, setpoint setter, and step selection

The room temperature sensor **KYM**ASGARD® **RTF 2 - FSE - PD** or **RFTF 2 - FSE - PD** is a batteryless and maintenance-free radio transmitter. Energy generation is effected by conversion of indoor room light into electric energy by means of a solar generator. These sensors are used to detect the room temperature or room humidity as well as for setpoint setting and to transmit the measurands via radio frequency to radio actuators and radio signal receivers / gateways. If ambient light conditions are insufficient for energy generation, they also can be operated on a lithium battery. To do so, insert the lithium cell into the battery holder provided. The device IDs are marked on a label in the device.

RTF 2 - FSE - PD
RFTF 2 - FSE - PD



TECHNICAL DATA

Operation:	Energy generation by solar cell, batteryless, maintenance-free (optionally battery-operated)
Radio technology:	EnOcean protocol, modulation ASK, 868 MHz, transmission power max. 10 mW, telegram type 4BS
Channels:	1 temperature, 1 setpoint, 1 step switch
Radio transmitter module:	EnOcean Dolphin
Measuring range, temperature:	0...+40 °C
Deviation, temperature:	typically ± 0.2 K at +25 °C
Measuring range, humidity:	0...100 % r.H.
Deviation humidity:	typically ± 3 % r.H. (30... 80 %) at +20 °C
Setpoint capture:	turning angle left 0° = 0 bits turning angle right 220° = 255 bits Step selection: 0 to 255 bits in steps
Measurand acquisition:	adjustable, every 1 s / 10 s / 100 s
Transmission interval:	adjustable, typically every 100 seconds, or at any measuring value change, or change of turning angle status telegram approximately every 16 minutes
Range of coverage:	indoors typically 30 - 100 m, outdoors up to 300 m
Enclosure:	plastic, material ABS, colour pure white (similar to RAL 9010)
Dimensions:	98 x 106 x 34 mm (Frija 2)
Mounting:	wall mounting or on in-wall flush box Ø 55 mm, base with 4-hole for mounting on vertically or horizontally installed in-wall flush boxes
Ambient temperature:	–5...+55 °C
Storage temperature:	–25...+60 °C
Humidity:	0...90 % r.H., non-precipitating air
Protection class:	III (according to EN 60 730)
Protection type:	IP 30 (according to EN 60 529)
Standards:	CE conformity according to EMC directive 2014 / 30 / EU and according to R&TTE directive 2014 / 53 / EU

Dimensional drawing

RTF 2 - FSE - PD
RFTF 2 - FSE - PD

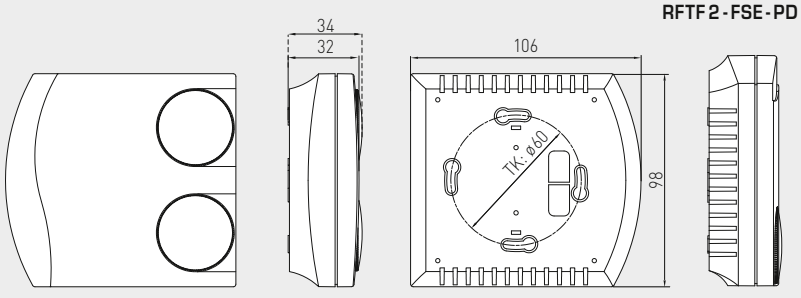

Schematic diagram

RTF 2 - FSE - PD
RFTF 2 - FSE - PD

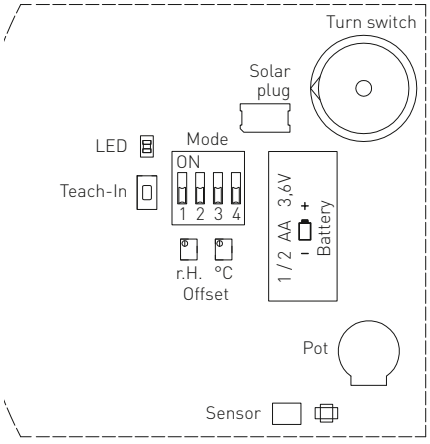

KYMASGARD® RTF 2 - FSE - PD – Room temperature radio sensors
KYMASGARD® RFTF 2 - FSE - PD – Wireless room humidity and temperature radio sensors

Type / WG02	Channels	Measuring Range Temperature	Measuring Range Humidity	Energy Generation	Item No.
RTF2-FSE-PD2	3	0...+40 °C	–	Solar cell, battery	1801-4451-0240-040
RTF2-FSE-PD5	3	0...+40 °C	–	Solar cell, battery	1801-4451-0340-040
RFTF2-FSE-PD2	4	0...+40 °C	0...100 % r.H.	Solar cell, battery	1801-4452-0240-040
Accessories					
ET BATTERIE	**Lithium battery** LS 14250				7000-4000-5000-000
Compatibility	For an overview, see the start of the chapter				

S+S REGELTECHNIK

Wireless room temperature radio sensors
with solar cell, setpoint setter, step selection, and push-button

The room temperature sensor **KYM**ASGARD® **RTF 2 - FSE - PDT** is a battery-less and maintenance-free radio transmitter. Energy generation is effected by conversion of indoor room light into electric energy by means of a solar generator. These sensors are used to detect the room temperature as well as for setpoint setting and to transmit the measurands via radio frequency to radio actuators and radio signal receivers / gateways. If ambient light conditions are insufficient for energy generation, they also can be operated on a lithium battery. To do so, insert the lithium cell into the battery holder provided. The device IDs are marked on a label in the device.

RTF 2 - FSE - PDT



TECHNICAL DATA

Operation:	Energy generation by solar cell, batteryless, maintenance-free (optionally battery-operated)
Radio technology:	EnOcean protocol, modulation ASK, 868 MHz, transmission power max. 10 mW, telegram type 4BS
Channels:	1 temperature, 1 setpoint, 1 step switch, 1 presence pushbutton
Radio transmitter module:	EnOcean Dolphin
Measuring range, temperature:	0...+40 °C
Deviation, temperature:	typically ±0.2 K at +25 °C
Setpoint capture:	turning angle left 0° = 0 bits turning angle right 220° = 255 bits Step selection: 0 to 255 bits in steps
Measurand acquisition:	adjustable, every 1 s / 10 s / 100 s
Transmission interval:	adjustable, typically every 100 seconds, or at any measuring value change, presence push-button activation, or change of turning angle status telegram approximately every 16 minutes
Range of coverage:	indoors typically 30 - 100 m, outdoors up to 300 m
Enclosure:	plastic, material ABS, colour pure white (similar to RAL 9010)
Dimensions:	98 x 106 x 34 mm (Frija 2)
Mounting:	wall mounting or on in-wall flush box Ø 55 mm, base with 4-hole for mounting on vertically or horizontally installed in-wall flush boxes
Ambient temperature:	–5...+55 °C
Storage temperature:	–25...+60 °C
Humidity:	0...90 % r.H., non-precipitating air
Protection class:	III (according to EN 60 730)
Protection type:	IP 30 (according to EN 60 529)
Standards:	CE conformity according to EMC directive 2014 / 30 / EU and according to R&TTE directive 2014 / 53 / EU

Dimensional drawing **RTF 2 - FSE - PDT**

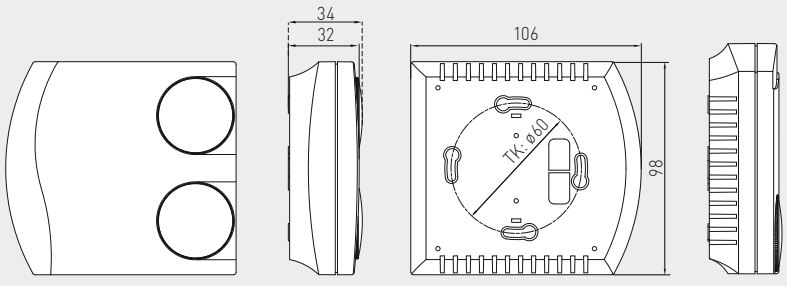

Schematic diagram **RTF 2 - FSE - PDT**

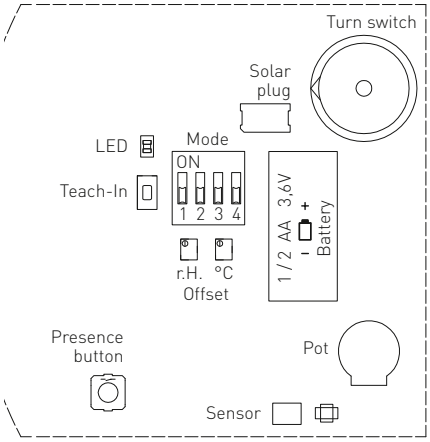

KYMASGARD® RTF 2 - FSE - PDT – Room temperature radio sensor

Type / WG02	Channels	Measuring Range Temperature	Humidity	Energy Generation	Item No.
RTF2-FSE-PD5T	4	0...+40 °C	–	Solar cell, battery	1801-4451-0540-040
Accessories					
ET BATTERIE	**Lithium battery** LS 14250				7000-4000-5000-000
Compatibility	For an overview, see the start of the chapter				

The radio transmitter **KYM**ASGARD® **WT- FSE** is a batteryless and maintenance-free universal transmitter insert with one rocker or two rockers with central position, matching diverse switch programmes of different leading manufacturers.
Rockers are also available as spare parts with and without printing.
Due to its flat design WT-FSE is applicable for wall mounting, also on glass.

WT-FSE-RW
(with twin rockers)



WT-FSE-RW
(with single rocker)



TECHNICAL DATA

Operation:	Energy generation by electrodynamic energy generator (induction principle), batteryless, maintenance-free
Radio technology:	EnOcean protocol, modulation EIRP / ASK, transmission power max. 10 mW, telegram type RPS-Type 2
Channels:	2 or 4 channels with 2 statuses each
Radio transmitter module:	PTM 200
Operating force:	approx. 7 N at +25 °C
Push-button stroke:	1.8 mm
Switching cycles:	> 50,000 activations according to EN 60669 / VDE 0632
Range of coverage:	indoors typically 30 - 100 m, outdoors up to 300 m
Dimensions:	71 x 71 mm bottom plate 55 x 55 mm frame insert 55 x 55 mm single rocker (without frame) 27.5 x 55 mm twin rocker (without frame)
Mounting:	on-wall on even surface, for sticking or screw fastening
Ambient temperature:	–25...+65 °C (in operation)
Storage temperature:	–40...+85 °C
Humidity:	0...95 % r.H., non-precipitating air
Standards:	CE conformity, ROHS conformity according to directive 2011 / 65 / EU
SWITCH PROGRAMME	
Manufacturer:	BERKER (S1, B1, B3, B7 glass) GIRA (System 55, E2, Event, Esprit) JUNG (A500, Aplus) MERTEN (M-Smart, M-Arc, M-Plan)
Enclosure:	plastic, material ABS, colour pure white / matt (similar to RAL 9010), (other colours are available upon request with colour variants depending on the respective light switch programme)

KYMASGARD® **WT-FSE** Radio transmitter as wall pushbutton

Type / WG02	Channels	Printing	Enclosure Colour	Item No.
WT-FSE				
WT-FSE-RW	2 / 4	–	Pure white / mat	1801-8412-1000-000
WT-FSE-ORW	2 / 4	Light I-O	Pure white / mat	1801-8412-1100-000
WT-FSE-VRW	2 / 4	Venetian blind △-▽	Pure white / mat	1801-8412-1200-000
Compatibility	For an overview, see the start of the chapter			

Radio transmitters as hand-held remote control units with 4 channels

S+S REGELTECHNIK

The radio transmitter **KYM**ASGARD® **HT4 - FSE** is a battery-less and maintenance-free hand-held transmitter with four independent individual buttons. Because of its ergonomic shape, it sits comfortably in the hand, however can also be fixed to the wall using the relevant adhesive mats.

HT4 - FSE



TECHNICAL DATA

Operation:	Energy generation by electrodynamic energy generator (induction principle), batteryless, maintenance-free
Radio technology:	EnOcean protocol, transmission power max. 10 mW, telegram type RPS-Type 2
Channels:	4 channels, each with 2 statuses
Radio transmitter module:	PTM 200
Operating force:	approx. 7 N at +25 °C
Push-button stroke:	1.8 mm
Switching cycles:	> 50,000 activations according to EN 60669 / VDE 0632
Range of coverage:	indoors typically 30 - 100 m, outdoors up to 300 m
Dimensions:	48 x 81 x 19 mm (W x H x D)
Enclosure:	plastic, material ABS, colours see table
Ambient temperature:	–25...+55 °C (in operation)
Storage temperature:	–40...+85 °C
Humidity:	0...95 % r.H., non-precipitating air
Standards:	CE conformity according to EMC directive 2014 / 30 / EU and according to R&TTE directive 2014 / 53 / EU

KYMASGARD® **HT4 - FSE** Radio transmitters as hand-held remote control units

Type / WG02	Channels	Enclosure Colour	Item No.
HT4 - FSE			
HT4-FSE-RW	4	Pure white	1801-8424-1000-000
HT4-FSE-SW	4	Black	1801-8424-2000-000
HT4-FSE-SB	4	Silver	1801-8424-3000-000
Compatibility	For an overview, see the start of the chapter		

Radio transmitters as door and window contact units with solar cell, with 1 channel

The radio transmitter **KYM**ASGARD® **FK1 - FSE** is a battery-less and maintenance-free window contact with one channel. Energy generation is effected by conversion of indoor room light into electric energy by means of a solar generator. It is used for status monitoring of windows and doors employing a reed contact with counter magnet and to transmit the results via radio signal to radio actuators and radio receivers / gateways. It is suitable for mounting on window and door frames made of wood, glass, and aluminium.

FK1-FSE



TECHNICAL DATA

Operation:	energy generation by electrodynamic solar generator, batteryless, maintenance-free
Radio technology:	EnOcean protocol, modulation ASK, transmission power max. 10 mW
Channels:	1 status, 1 control
Radio transmitter module:	STM100
Status acquisition:	reed contact
Measurand acquisition:	every 1000 seconds
Transmission interval:	every 1000 seconds, or at any status change
Range of coverage:	indoors typically 30 - 100 m, outdoors up to 300 m
Dimensions:	110 x 19 x 15 mm (L x W x D)
Enclosure:	plastic, material ABS, colour pure white (similar to RAL 9010)
Mounting:	on-wall on even surface, for sticking or screw fastening
Ambient temperature:	–25...+65 °C (in operation)
Storage temperature:	–40...+85 °C
Humidity:	0...70 % r. H., non-precipitating air
Protection type:	IP 20 (according to EN 60 529)
Standards:	CE conformity, ROHS conformity according to directive 2011 / 65 / EU

KYMASGARD® **FK1-FSE** Radio transmitter as door and window contact unit

Type / WG02	Channels	Enclosure Colour	Item No.
FK1-FSE			
FK1-FSE-RW	1	Pure white	1801-8431-1000-000
Compatibility	For an overview, see the start of the chapter		

KYMASGARD® USB - FEM

Communication USB flash drive
for radio transmitters / radio receivers
with EnOcean technology

S+S REGELTECHNIK

Communication USB flash drive with protocol on EnOcean basis for showing the active radio communication subscribers. The addresses of all registered radio communication subscribers are displayed. It is used for checking the field intensity and the transmitted data.

USB-FEM



TECHNICAL DATA

Operation:	connection via USB port at the PC
Radio technology:	EnOcean protocol, transmission power max. 10 mW
Radio transmitter module:	TCM 300
Communication:	ESP 3 protocol for communication between USB-FEM and application software like EnOcean-Analyse-Software (software included in the scope of delivery)
Range of coverage:	indoors typically 30 - 100 m, outdoors up to 300 m
Dimensions:	71 x 23 x 11 mm
Enclosure:	plastic, material ABS, transparent
Ambient temperature:	0...+40 °C
Humidity:	0...95 % r.H., non-precipitating air
Scope of supply:	USB-FEM, USB flash drive with EnOcean-Analyse-Software

FUNCTION

With EnOcean-Analyse-Software installed, the necessary drivers are automatically installed as soon as the USB receiver is connected to the laptop.
The green LED shows that a USB connection exists. In the software, select the respective Com Port and click on Connect.
If the yellow LED is blinking, data is being received. Radio transmitters are recognized automatically (depending on the setting of the time interval, it may take several seconds until all transmitters have been recognized).
Push the Learn button on the radio transmitter to display the EEP symbol in the corresponding ID number.
Double-click to transfer that radio transmitter to the workspace.
Only radio transmitters that are in the workspace can be read out.

KYMASGARD® USB - FEM Communications USB flash drive

Type / WG02	Scope of supply	Item No.
USB-FEM		
USB-FEM	USB-FEM, USB flash drive with EnOcean-Analyse-Software	1801-7460-7002-000
Compatibility	all **KYM**ASGARD® radio transmitters and radio signal receivers	

The **KYM**ASGARD® **GW-RS485-FEM** is a device for on-wall installation. It serves as unidirectional or bidirectional gateway between radio transmitters / radio receivers and bus systems on basis of RS485 communication. It enables receiving and transmitting of radio telegrams from all radio transmitters that comply with the EnOcean protocol standard.

GW-RS485-FEM



TECHNICAL DATA

Operating mode:	receiving (from up to 30 radio transmitters) and transmitting of radio telegrams according to EnOcean standard
Rated voltage:	10 - 24 V DC
Current consumption:	45 mA at 12 V DC
Radio module:	TCM320
Fusing:	none
Operating elements:	1 button ("LRN") 1 button („CLR") 5 LEDs
Connection:	5-pole terminal screw
Enclosure:	plastic, material ABS, colour pure white (similar to RAL 9010)
Dimensions:	85 x 91 x 27 mm (Frija 1)
Mounting:	wall mounting or on in-wall flush box, Ø 55 mm, base with 4 holes, for attachment to vertically or horizontally installed in-wall flush boxes for rear cable entry, with predetermined breaking point for cable entry from top /bottom in case of plain on-wall installation
Ambient temperature:	–5...+40 °C (in operation)
Humidity:	5...90 % r.H., non-precipitating air
Protection type:	IP 20 (according to EN 60 529)
Standards:	CE conformity, EN 090-2-2, EN 60669-2-1, ROHS conformity according to Directive 2011 / 65 / EU

Dimensional drawing **GW-RS485-FEM**

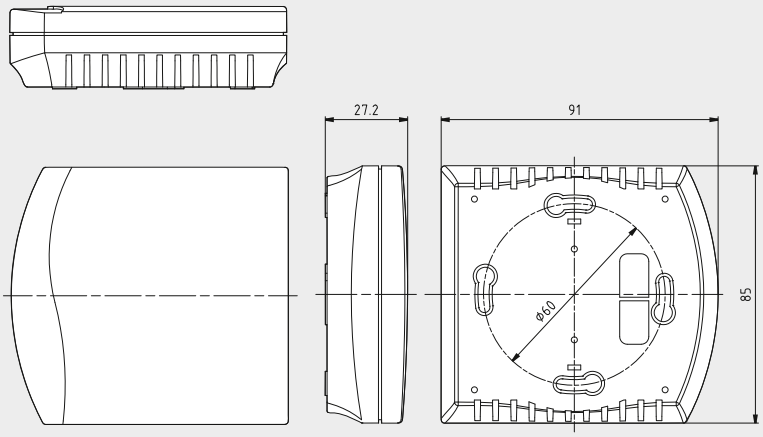

Schematic diagram **GW-RS485-FEM**

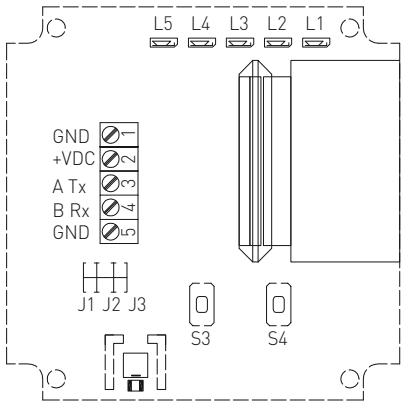

KYMASGARD® GW-RS485-FEM Gateway for RS485-Bus

Type / WG02	Type	Communication	Installation	Item No.
GW-RS485-FEM				
GW-RS485-FEM	Bidirectional	RS485	On-wall	1801-7429-0022-300
Note:	other gateways optional			on request
Compatibility	all **KYM**ASGARD® radio transmitters and radio signal receivers			

KYMASGARD® DA100-FEM-UP

**Radio signal receiver,
dimmer actuator with 1 channel,
in-wall**

NEW

S+S REGELTECHNIK

The dimmer actuator **KYM**ASGARD® **DA100-FEM-UP** is a device with one channel for in-wall or on-wall installation. Initiated by up to 30 radio transmitters (wall-mounted and hand-held transmitters), a group of ohmic, inductive and capacitive consumers can be switched and dimmed.

Each taught-in transmitter can be assigned a different function such as a sequential pushbutton function or a 10-minute switch-off delay. The repeater function can be additionally activated by means of a simple procedure.

DA100-FEM-UP



TECHNICAL DATA

Operating mode:	switching ON/OFF, dimming brighter/darker
Rated voltage:	110 - 240 V, 50 / 60 Hz
Fusing:	16 A
Operating elements:	2 buttons ("LRN"/"CLR") 2 LEDs ("LRN"/"CLR") 1 rotary switch with 16 positions
Channels:	1 channel
Standby consumption:	0.6 W
Load output / Connected load:	MOSFET, not potential-free rated current: 6 A / 250 V AC max. switching capacity AC1: 300 VA max. switching capacity AC15: 150 VA ohmic load (filament bulbs): 300 W inductive load (cos φ ≥ 0.8): 200 VA halogen lamps 230 V AC with extra-low voltage transformers for phase leading and trailing edge control: 200 W
Switching properties:	parametrisable
Connection:	4 mm², via terminal screws
Enclosure:	Plastic, material ABS, Ø 51 mm, height 25 mm
Mounting:	In-wall, on-wall
Ambient temperature:	–20...+40 °C (in operation)
Storage temperature:	–40...+85 °C
Permitted humidity:	5...90 % r.H., non-precipitating air
Protection type:	IP 20 (according to EN 60 529)
Standards:	CE conformity, EN 090-2-2, EN 60669-2-1, ROHS conformity according to directive 2011 / 65 / EU

Connection diagram **DA100-FEM-UP**

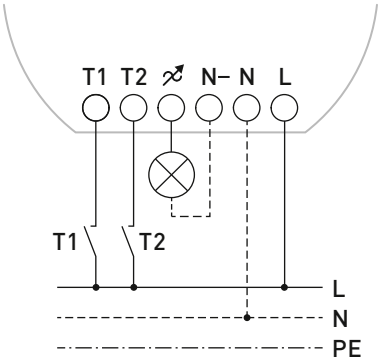

KYMASGARD® **DA100-FEM-UP** Dimmer actuator				
Type / WG02	**Channels**	**Switching element**	**Installation**	**Item no.**
DA100-FEM-UP				
DA100-FEM-UP	1	electronic	In-wall	1801-7441-0400-300
Compatibility	For an overview, see the start of the chapter			

The Venetian blind actuator **KYM**ASGARD® **JA100-FEM-UP** is a device with one channel for in-wall or on-wall installation. Initiated by up to 30 radio transmitters (wall-mounted and hand-held transmitters, motion detectors, outdoor light sensor) as well as by the two auxiliary inputs, a roller shutter/blind motor can be controlled via its output channel.

Each taught-in transmitter can be assigned a different function such as a sequential pushbutton function or a 10-minute switch-off delay. The repeater function can be additionally activated by means of a simple procedure.

JA100-FEM-UP



TECHNICAL DATA

Operating mode:	moving Up / Down (long push of button), adjusting blades (short push of button)
Rated voltage:	110 - 240 V, 50 / 60 Hz
Fusing:	16 A
Operating elements:	2 buttons ("LRN"/"CLR") 2 LEDs ("LRN"/"CLR") 1 rotary switch with 16 positions
Channels:	1 channel
Standby consumption:	0.6 W
Load output / Connected load:	2 secured normally open contacts rated current: 6 A / 240 V AC max. switch-on current: 10 A max. switching capacity AC1: 1500 VA max. switching capacity AC15: 300 VA motor load 1Ph AC3 / 230 V AC: 0.185 kW capacitive load: 10 µF
Switching properties:	parametrisable
Connection:	4 mm^2, via terminal screws
Enclosure:	Plastic, material ABS, Ø 51 mm, height 25 mm
Mounting:	In-wall, on-wall
Ambient temperature:	–20...+40 °C (in operation)
Storage temperature:	–40...+85 °C
Permitted humidity:	5...90 % r.H., non-precipitating air
Protection type:	IP 20 (according to EN 60 529)
Standards:	CE conformity, EN 090-2-2, EN 60669-2-1, ROHS conformity according to directive 2011 / 65 / EU

Connection diagram **JA100-FEM-UP**

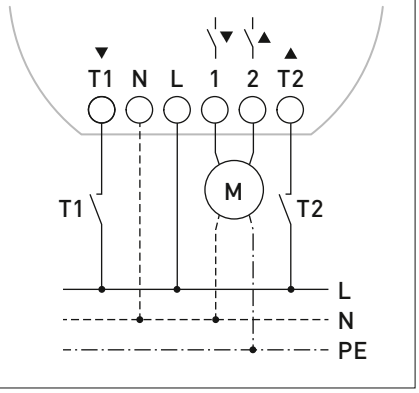

KYMASGARD® **JA100-FEM-UP** Venetian blind actuator				
Type / WG02	**Channels**	**Switching element**	**Installation**	**Item no.**
JA100-FEM-UP				
JA100-FEM-UP	1	Normally open contact	In-wall	1801-7441-0500-300
Compatibility	For an overview, see the start of the chapter			

KYMASGARD® SA100-FEM-UP

Radio receiver,
switching actuator with 1 channel,
in-wall

NEW

S+S REGELTECHNIK

The switching actuator **KYM**ASGARD® **SA100-FEM-UP** is a device with one channel for in-wall or on-wall installation and is used for switching electric consumers. Initiated by up to 30 radio transmitters (wall-mounted and hand-held transmitters, motion detectors, window contact) a group of electric consumers can be switched.

Each taught-in transmitter can be assigned a different function such as a sequential pushbutton function or a 10-minute switch-off delay. The repeater function can be additionally activated by means of a simple procedure.

SA100-FEM-UP



TECHNICAL DATA

Operating mode:	switching ON/OFF, pulse switch, stepping switch
Rated voltage:	110 - 240 V, 50 / 60 Hz
Fusing:	16 A
Operating elements:	2 buttons ("LRN"/"CLR") 2 LEDs ("LRN"/"CLR") 1 rotary switch with 16 positions
Channels:	1 channel
Standby consumption:	0.6 W
Load output / Connected load:	normally open contact potential free rated current: 16 A / 250 V AC max. switch-on current: 130 A / 20 ms max. switching capacity AC1: 4000 VA max. switching capacity AC15: 750 VA filament bulbs: 2000 W halogen lamps 230 V AC: 2000 W fluorescent lamps, uncompensated: 1000 W fluorescent lamps, compensated: 750 W fluorescent lamps, duo-connection: 1000 W motor load 1Ph AC3 / 230 V AC: 1 kW electronic ballast assuming 30 µF: 3 unit capacitive load : 30 µF
Switching properties:	parametrisable
Connection:	4 mm², via terminal screws
Enclosure:	Plastic, material ABS, Ø 51 mm, height 25 mm
Mounting:	In-wall, on-wall
Ambient temperature:	–20...+40 °C (in operation)
Storage temperature:	–40...+85 °C
Permitted humidity:	5...90 % r.H., non-precipitating air
Protection type:	IP 20 (according to EN 60 529)
Standards:	CE conformity, EN 090-2-2, EN 60669-2-1, ROHS conformity according to directive 2011 / 65 / EU

Connection diagram **SA100-FEM-UP**

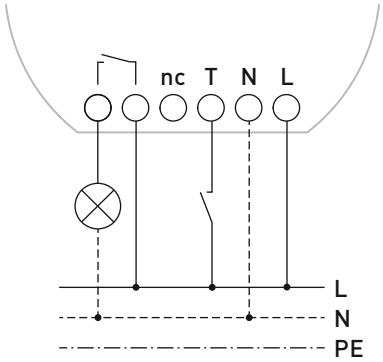

KYMASGARD® **SA100-FEM-UP** Switching actuator				
Type / WG02	**Channels**	**Switching element**	**Installation**	**Item no.**
SA100-FEM-UP				
SA100-FEM-UP	1	Normally open contact	In-wall	1801-7441-0200-300
Compatibility	For an overview, see the start of the chapter			

The switching actuator **KYM**ASGARD® **SA200-FEM-UP** is a device with two channels for in-wall or on-wall installation. Initiated by up to 30 radio transmitters (wall-mounted and hand-held transmitters, motion detectors, outdoor light sensors) and the two auxiliary inputs, two groups of electric consumers can be switched via its two outputs.

Each taught-in transmitter can be assigned a different function such as a sequential pushbutton function or a 10-minute switch-off delay. The repeater function can be additionally activated by means of a simple procedure.

SA200-FEM-UP



TECHNICAL DATA

Operating mode:	switching ON/OFF, pulse switch, stepping switch
Rated voltage:	110 - 240 V, 50/60 Hz
Fusing:	16 A
Operating elements:	2 buttons ("LRN"/"CLR") 2 LEDs ("LRN"/"CLR") 1 rotary switch with 16 positions
Channels:	2 channels
Standby consumption:	0.6 W
Load output / Connected load:	normally open contact rated current: 6 A / 240 V AC max. switch-on current: 10 A max. switching capacity AC1: 1500 VA max. switching capacity AC15: 300 VA filament bulbs: 750 W halogen lamps 230 V AC: 500 W fluorescent lamps, uncompensated: 300 W fluorescent lamps, compensated: 200 W fluorescent lamps, duo-connection: 300 W motor load 1Ph AC3 / 230 V AC: 0.185 kW electronic ballast assuming 30 µF: 1 unit capacitive load: 10 µF
Switching properties:	parametrisable
Connection:	4 mm², via terminal screws
Enclosure:	Plastic, material ABS, Ø 51 mm, height 25 mm
Mounting:	In-wall, on-wall
Ambient temperature:	–20...+40 °C (in operation)
Storage temperature:	–40...+85 °C
Permitted humidity:	5...90 % r.H., non-precipitating air
Protection type:	IP 20 (according to EN 60 529)
Standards:	CE conformity, EN 090-2-2, EN 60669-2-1, ROHS conformity according to directive 2011 / 65 / EU

Connection diagram **SA200-FEM-UP**

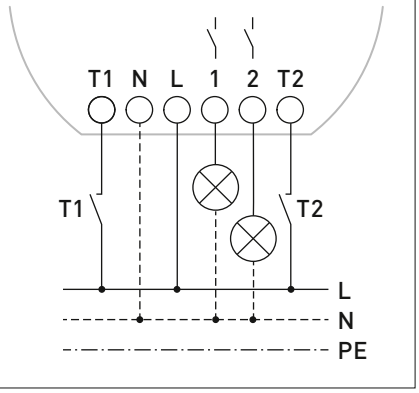

KYMASGARD® **SA200-FEM-UP** Switching actuator				
Type / WG02	**Channels**	**Switching element**	**Installation**	**Item no.**
SA200-FEM-UP				
SA200-FEM-UP	2	Normally open contact	In-wall	1801-7443-0200-300
Compatibility	For an overview, see the start of the chapter			

KYMASGARD® TA100-FEM-UP

**Radio receiver,
thermostat actuator with 1 channel,
in-wall**

NEW

S+S REGELTECHNIK

The thermostat actuator **KYM**ASGARD® **TA100-FEM-UP** is a device with one channel for in-wall or on-wall installation. With the help of a room temperature sensor (see compatibility overview) and up to 8 radio window contacts (FK1-FSE) in AND conjunction, a group of electric consumers (control valves, electric heating units, etc.) can be switched by a two-position control with frost protection function via an output. Different functions can be allocated to that output, depending on the parameter setting.

TA100-FEM-UP



TECHNICAL DATA

Operating mode:	switching ON/OFF, pulse switch, stepping switch
Rated voltage:	110 - 240 V, 50 / 60 Hz
Fusing:	16 A
Operating elements:	2 buttons ("LRN"/"CLR") 2 LEDs ("LRN"/"CLR") 1 rotary switch with 16 positions
Channels:	1 channel
Standby consumption:	0.6 W
Load output / Connected load:	normally open contact potential free rated current: 16 A / 250 V AC max. switch-on current: 130 A / 20 ms max. switching capacity AC1: 4000 VA max. switching capacity AC15: 750 VA motor load 1Ph AC3 / 230 V AC: 1 kW capacitive load: 30 µF
Switching properties:	parametrisable
Connection:	4 mm², via terminal screws
Enclosure:	Plastic, material ABS, Ø 51 mm, height 25 mm
Mounting:	In-wall, on-wall
Ambient temperature:	–20...+40 °C (in operation)
Storage temperature:	–40...+85 °C
Permitted humidity:	5...90 % r.H., non-precipitating air
Protection type:	IP 20 (according to EN 60 529)
Standards:	CE conformity, EN 090-2-2, EN 60669-2-1, ROHS conformity according to directive 2011 / 65 / EU

Connection diagram **TA100-FEM-UP**

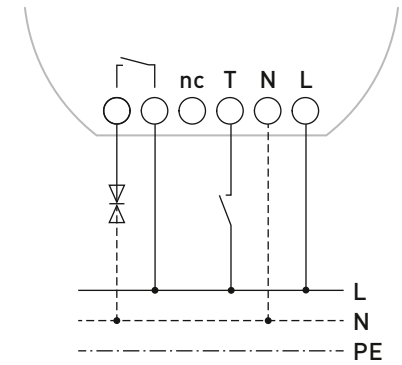

KYMASGARD® **TA100-FEM-UP** Thermostat actuator

Type / WG02	Channels	Switching element	Installation	Item no.
TA100-FEM-UP				
TA100-FEM-UP	1	Normally open contact	In-wall	1801-7441-0600-300
Compatibility	For an overview, see the start of the chapter			

The thermostat actuator **KYM**ASGARD® **TA200-FEM-UP** is a device with two channels for in-wall or on-wall installation. With the help of a room temperature sensor (see compatibility overview) and up to 8 radio window contacts (FK1-FSE) in AND conjunction, a group of electric consumers (control valves, electric heating units, etc.) can be switched by a two-position control with frost protection function via an output. Different functions can be allocated to that output, depending on the parameter setting.

TA200-FEM-UP



TECHNICAL DATA

Operating mode:	switching ON/OFF, pulse switch, stepping switch
Rated voltage:	110 - 240 V, 50/60 Hz
Fusing:	16 A
Operating elements:	2 buttons ("LRN"/"CLR") 2 LEDs ("LRN"/"CLR") 1 rotary switch with 16 positions
Channels:	2 channels
Standby consumption:	0.6 W
Load output / Connected load:	normally open contact rated current: 6 A / 240 V AC max. switch-on current: 10 A max. switching capacity AC1: 1500 VA max. switching capacity AC15: 300 VA motor load 1Ph AC3 / 230 V AC: 0.185 kW capacitive load: 10 µF
Switching properties:	parametrisable
Connection:	4 mm², via terminal screws
Enclosure:	Plastic, material ABS, Ø 51 mm, height 25 mm
Mounting:	In-wall, on-wall
Ambient temperature:	–20...+40 °C (in operation)
Storage temperature:	–40...+85 °C
Permitted humidity:	5...90 % r.H., non-precipitating air
Protection type:	IP 20 (according to EN 60 529)
Standards:	CE conformity, EN 090-2-2, EN 60669-2-1, ROHS conformity according to directive 2011 / 65 / EU

Connection diagram **TA200-FEM-UP**

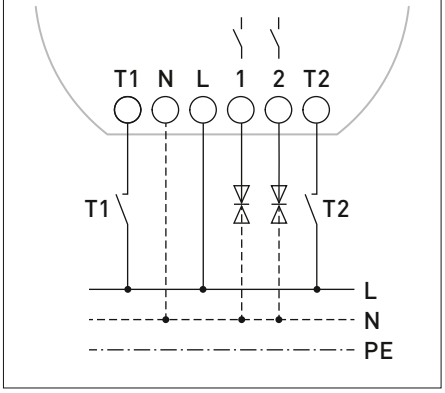

KYMASGARD® **TA200-FEM-UP** Thermostat actuator

Type / WG02	Channels	Switching element	Installation	Item no.
TA200-FEM-UP				
TA200-FEM-UP	2	Normally open contact	In-wall	1801-7443-0600-300
Compatibility	For an overview, see the start of the chapter			

KYMASGARD® IN400-FSE-UP

**Radio transmitter,
pushbutton interface with 4 channels,
in-wall**

NEW

S+S REGELTECHNIK

The pushbutton interface **KYM**ASGARD® **IN400-FSE-UP** is a device with four channels for in-wall or on-wall installation and is used for detecting up to four 230 V AC switching/sensor contacts. A corresponding radio telegram is sent every time the status of the 230 V AC switching/sensor contact changes.

IN400-FSE-UP



TECHNICAL DATA

Radio technology:	EnOcean protocol, modulation EIRP / ASK, transmission power max. 10 mW, telegram type RPS-Type 2
Rated voltage:	110 - 240 V, 50 / 60 Hz
Fusing:	10 A
Operating elements:	2 buttons ("LRN"/"CLR") 2 LEDs ("LRN"/"CLR") 1 rotary switch with 16 positions
Channels:	4 channels, each with 2 statuses
Standby consumption:	0.4 W
Inputs:	100 V - 230 V AC inputs
Behaviour:	like a transmitter with PTM 200 (wall-mounted transmitter)
Range of coverage:	indoors typically 30 - 100 m, outdoors up to 300 m
Connection:	4 mm², via terminal screws
Enclosure:	Plastic, material ABS, Ø 51 mm, height 25 mm
Mounting:	In-wall, on-wall
Ambient temperature:	–20...+40 °C (in operation)
Storage temperature:	–40...+85 °C
Permitted humidity:	5...90 % r.H., non-precipitating air
Protection type:	IP 20 (according to EN 60 529)
Standards:	CE conformity, EN 090-2-2, EN 60669-2-1, ROHS conformity according to directive 2011 / 65 / EU

Connection diagram **IN400-FSE-UP**

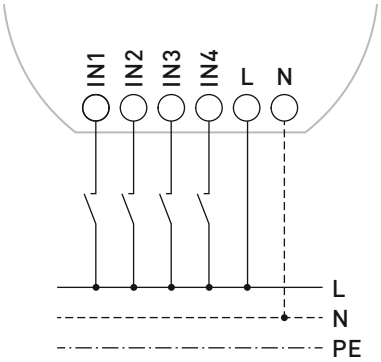

KYMASGARD® **IN400-FSE-UP** Pushbutton interface

Type / WG02	Channels	Installation	Item no.
IN400-FSE-UP			
IN400-FSE-UP	4	In-wall	1801-7444-0100-300
Compatibility	For an overview, see the start of the chapter		

The Venetian blind actuator **KYM**ASGARD® **JA200-FEM-AP** is a device with two channels for in-wall or on-wall installation. Initiated by up to 30 radio transmitters (wall-mounted and hand-held transmitters, motion detectors, outdoor light sensor) as well as by the four auxiliary inputs, two roller shutter/blind motors can be controlled independently via its four auxiliary inputs.

Different functions can be allocated to that output, depending on the parameter setting. The repeater function can be additionally activated by means of a simple procedure.

JA200-FEM-AP



TECHNICAL DATA

Operating mode:	moving Up / Down (long push of button), adjusting blades (short push of button)
Rated voltage:	110 - 240 V, 50 / 60 Hz
Fusing:	16 A
Operating elements:	2 buttons ("LRN"/"CLR") 2 LEDs ("LRN"/"CLR") 1 rotary switch with 16 positions
Channels:	2 channels
Standby consumption:	0.6 W
Load output / Connected load:	4 secured normally open contacts, potential-free rated current: 16 A / 250 V AC max. switch-on current: 130 A / 20 ms max. switching capacity AC1: 4000 VA max. switching capacity AC15: 750 VA motor load 1Ph AC3 / 230 V AC: 1 kW capacitive load: 30 µF
Switching properties:	parametrisable
Connection:	4 mm², via terminal screws
Enclosure:	plastic, material ABS, 170 x 85 x 40 mm
Mounting:	On-wall
Ambient temperature:	–20...+40 °C (in operation)
Storage temperature:	–40...+85 °C
Permitted humidity:	5...90 % r.H., non-precipitating air
Protection type:	IP 42 (according to EN 60529)
Standards:	CE conformity, EN 090-2-2, EN 60669-2-1, ROHS conformity according to directive 2011 / 65 / EU

Connection diagram **JA100-FEM-UP**

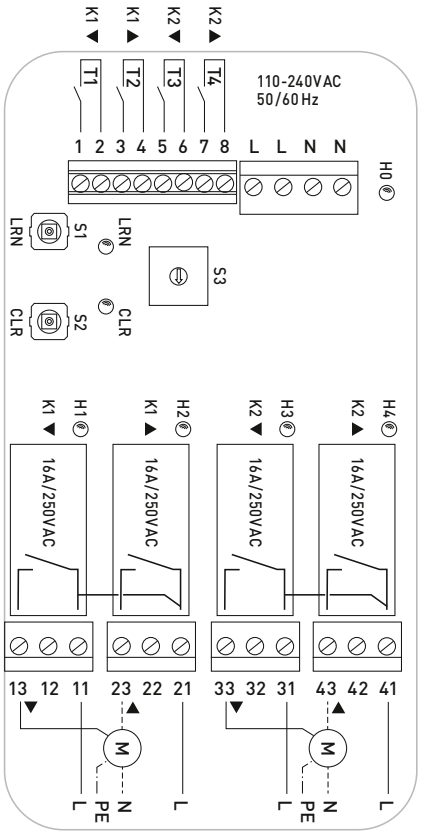

KYMASGARD® **JA200-FEM-AP** Venetian blind actuator				
Type / WG02	**Channels**	**Switching element**	**Installation**	**Item no.**
JA200-FEM-AP				
JA200-FEM-AP	2	Normally open contact	On-wall	1801-7453-0500-300
Compatibility	For an overview, see the start of the chapter			

KYMASGARD® SA400 - FEM - AP

**Radio receiver,
switching actuator with 4 channels,
on-wall**

NEW

S+S REGELTECHNIK

The switching actuator **KYM**ASGARD® **SA400 - FEM - AP** is a device with four potential-free channels for on-wall installation. Initiated by up to 30 radio transmitters (wall-mounted and hand-held transmitters, motion detectors, outdoor light sensors) and the auxiliary inputs, up to four different groups of electric consumers can be switched.

Each taught-in transmitter can be assigned a different function such as a sequential pushbutton function or a 10-minute switch-off delay. The repeater function can be additionally activated by means of a simple procedure.

SA400 - FEM - AP



TECHNICAL DATA

Operating mode:	switching ON / OFF (long push of button), pulse switch, stepping switch
Rated voltage:	110 - 240 V, 50 / 60 Hz
Fusing:	16 A
Operating elements:	2 buttons ("LRN"/"CLR") 2 LEDs ("LRN"/"CLR") 1 rotary switch with 16 positions
Channels:	4 channels
Standby consumption:	0.6 W
Load output / Connected load:	normally open contact potential free rated current: 16 A / 250 V AC max. switch-on current: 130 A / 20 ms max. switching capacity AC1: 4000 VA max. switching capacity AC15: 750 VA filament bulbs: 2000 W halogen lamps 230 V AC: 2000 W fluorescent lamps, uncompensated: 1000 W fluorescent lamps, compensated: 750 W fluorescent lamps, duo-connection: 1000 W motor load 1Ph AC3 / 230 V AC: 1 kW electronic ballast assuming 30 µF: 3 unit capacitive load: 30 µF
Switching properties:	parametrisable
Connection:	4 mm², via terminal screws
Enclosure:	plastic, material ABS, 170 x 85 x 40 mm
Mounting:	On-wall
Ambient temperature:	–20...+40 °C (in operation)
Storage temperature:	–40...+85 °C
Permitted humidity:	5...90 % r.H., non-precipitating air
Protection type:	IP 42 (according to EN 60529)
Standards:	CE conformity, EN 090-2-2, EN 60669-2-1, ROHS conformity according to directive 2011 / 65 / EU

Connection diagram **SA400 - FEM - AP**

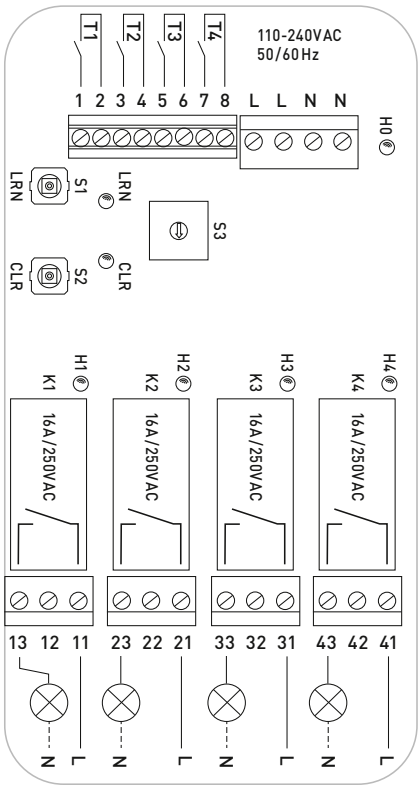

KYMASGARD® SA400 - FEM - AP Switching actuator

Type / WG02	Channels	Switching element	Installation	Item no.
SA400 - FEM - AP				
SA400-FEM-AP	4	Normally open contact	On-wall	1801-7454-0200-300
Compatibility	For an overview, see the start of the chapter			

The control valve actuator **KYM**ASGARD® **SV600 - FEM - UP** is a device with six channels for on-wall installation. Initiated by up to 30 radio transmitters (wall-mounted and hand-held transmitters, motion detectors, room temperature sensor, window contact), up to six electrothermic actuators in 2-position control can be controlled for room temperature regulation.

The corresponding fixed function, such as the selection of the operating mode, frost protection function, etc., is assigned directly when teaching-in the transmitter. The repeater function can be additionally activated by means of a simple procedure.

SV600 - FEM - AP



TECHNICAL DATA

Operating mode:	switching ON/OFF in 2-position control
Rated voltage:	110 - 240 V, 50 / 60 Hz
Fusing:	16 A
Operating elements:	2 buttons ("LRN"/"CLR") 2 LEDs ("LRN"/"CLR") 1 rotary switch with 16 positions
Channels:	6 channels
Standby consumption:	0.6 W
Load output / Connected load:	electronic switching contact rated current: 2 A / 250 V AC max. switch-on current: 2 A / 2 ms max. switching capacity AC1: 500 VA
Switching properties:	parametrisable
Connection:	4 mm², via terminal screws
Enclosure:	plastic, material ABS, 170 x 85 x 40 mm
Mounting:	On-wall
Ambient temperature:	–20...+40 °C (in operation)
Storage temperature:	–40...+85 °C
Permitted humidity:	5...90 % r.H., non-precipitating air
Protection type:	IP 42 (according to EN 60529)
Standards:	CE conformity, EN 090-2-2, EN 60669-2-1, ROHS conformity according to directive 2011 / 65 / EU

Connection diagram **SV600 - FEM - AP**

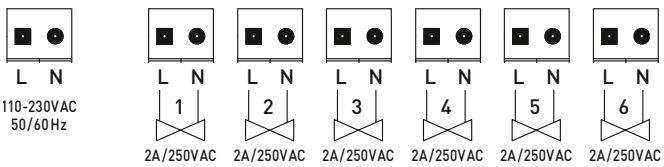

KYMASGARD® **SV600 - FEM - AP** Control valve actuator

Type / WG02	Channels	Switching element	Installation	Item no.
SV600 - FEM - AP				
SV600-FEM-AP	6	electronic	On-wall	1801-7456-0800-300
Compatibility	For an overview, see the start of the chapter			

KYMASGARD® AFTF-HK-FSE

Multifunctional outside radio sensor for humidity, temperature and light intensity, with solar cell

NEW

S+S REGELTECHNIK

The multifunctional outside sensor **KYM**ASGARD® **AFTF-HK-FSE** is a maintenance-free radio transmitter without battery for on-wall installation. Energy is generated by converting outdoor light into electric energy by means of a solar generator. It is used to detect the outside temperature, outdoor humidity and outdoor light intensity and to transmit the measurands via radio signal to radio actuators and radio receivers/gateways.

AFTF-HK-FSE



TECHNICAL DATA

Operation:	Energy generation by solar cell, batteryless, maintenance-free (optionally battery-operated)
Radio technology:	EnOcean protocol, modulation ASK, 868 MHz, transmission power max. 10 mW, telegram type 4BS
Channels:	1 temperature, 1 humidity, 1 light intensity
Radio transmitter module:	EnOcean Dolphin
Measurand acquisition:	adjustable, every 1s / 10 s / 100 s
Transmission interval:	adjustable, typically every 100 seconds, or at any measuring value change, status telegram approximately every 16 minutes
Range of coverage:	Indoors typically 30 - 100 m, outdoors up to 300 m
HUMIDITY	
Operating range, humidity:	0...100 % r. H.
Deviation in humidity:	typically **±2.0** % (20...80 % r. H.) at +25 °C, otherwise ± 3.0 %
TEMPERATURE	
Operating range, temperature:	–25...+40 °C
Deviation in temperature:	typically ± 0.2 K at +25 °C
LIGHT INTENSITY	
Light intensity operating range:	**Multi-range switching** 0...1000 Lux / 10...100 kLux
Deviation in light intensity:	typically ± 50 Lux (at 0...1000 Lux) / ± 250 Lux (at 10...100 kLux)
Enclosure:	Plastic, UV-stabilised, polyamide material, 30 % glass-globe reinforced, with quick-locking screws (slotted / Phillips head combination), traffic white colour (similar to RAL 9016), enclosure cover is transparent!
Enclosure dimensions:	72 x 64 x 43.3 mm (Tyr 1)
Protective tube:	**made of stainless steel V2A** (1.4301), Ø = 16 mm, NL = 55 mm
Sensor protection:	**plastic** sinter filter, Ø 16 mm, L = 35 mm, exchangeable (optional **metal** sinter filter, Ø 16 mm, L = 32 mm)
Ambient temperature:	–25...+60 °C
Storage temperature:	–25...+60 °C
Permitted humidity:	0...90 % r.H., non-precipitating air
Protection class:	III (according to EN 60 730)
Protection type:	IP 65 (according to EN 60 529)
Standards:	CE conformity according to EMC Directive 2014 / 30 / EU and according to R&TTE Directive 2014 / 53 / EU

SF-M
Metal sinter filter (optional)



Dimensional drawing

AFTF-HK-FSE

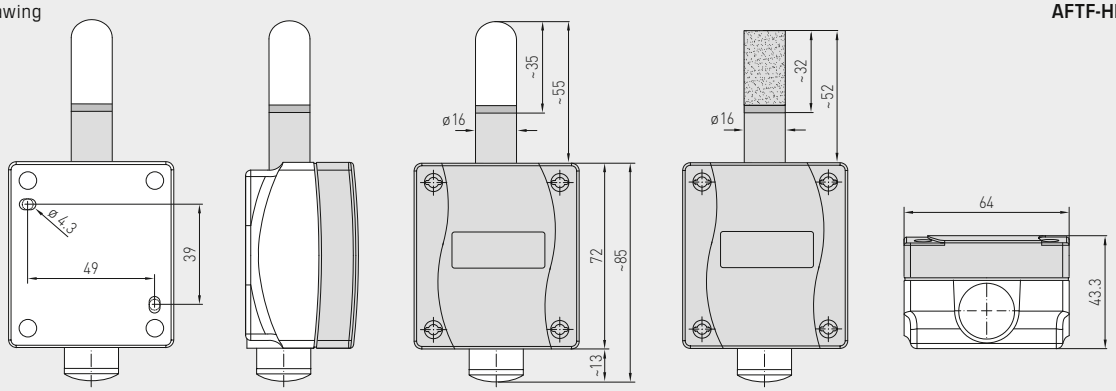

KYMASGARD® AFTF-HK-FSE Outside radio sensor for humidity, temperature and light intensity

Type / WG02	Channels	Measuring ranges Temperature	Humidity	Light intensity	Item no.
AFTF-HK-FSE				(switchable)	
AFTF-HK-FSE	3	–25...+40 °C	0...100 % r.H.	0...1000 Lux / 10...100 kLux	1801-1140-1000-000
Compatibility		For an overview, see the start of the chapter			

Multifunctional outside radio sensor for wind strength and light intensity, with solar cell

The multifunctional outside radio sensor **KYM**ASGARD® **AWSF-HK-FSE** is a maintenance-free radio sensor without battery for on-wall installation. Energy is generated by converting outdoor light into electric energy by means of a solar generator. It is used to detect the wind speed and outdoor light intensity and to transmit to the measurands via radio signal to radio actuators and radio receivers / gateways.

AWSF-HK-FSE



TECHNICAL DATA

Operation:	Energy generation by solar cell, batteryless, maintenance-free (optionally battery-operated)
Radio technology:	EnOcean protocol, modulation ASK, 868 MHz, transmission power max. 10 mW, telegram type 4BS
Channels:	1 wind speed, 1 light intensity
Radio transmitter module:	EnOcean Dolphin
Measurand acquisition:	adjustable, 1 s / 10 s / 100 s and on event
Transmission interval:	adjustable, typically every 100 seconds at any measuring value change, status telegram approximately every 16 minutes
Range of coverage:	Indoors typically 30 - 100 m, outdoors up to 300 m
WIND STRENGTH	
Wind operating range:	0...100 km/h
Wind deviation:	typically ± 5 km/h
LIGHT INTENSITY	
Light intensity operating range:	**Multi-range switching** 0...1000 Lux / 10...100 kLux
Deviation in light intensity:	typically ± 50 Lux (at 0...1000 Lux) typically ± 250 Lux (at 10...100 kLux)
Enclosure:	plastic, PC material, light grey colour (similar to RAL 7035)
Enclosure dimensions:	approx. 200 x 50 x 50 mm
Mounting:	Wall-mounted via screws, on-wall
Ambient temperature:	–25...+60 °C
Storage temperature:	–25...+60 °C
Permitted humidity:	0...90 % r.H., non-precipitating air
Protection class:	III (according to EN 60 730)
Protection type:	IP 30 (according to EN 60 529)
Standards:	CE conformity according to EMC Directive 2014 / 30 / EU and according to R&TTE Directive 2014 / 53 / EU

KYMASGARD® **AWSF-HK-FSE** Outside radio sensor for wind strength and light intensity

Type / WG02	Channels	Measuring ranges Wind strength	Light intensity	Item no.
AWSF-HK-FSE			(switchable)	
AWSF-HK-FSE	2	0...100 km/h	0...1000 Lux / 10...100 kLux	1801-1150-5000-000
Compatibility		For an overview, see the start of the chapter		



Accessories

Take advantage of our comprehensive range of accessories, which can be used together with our entire product portfolio. This keeps you always a step ahead, and best of all: If you buy and stock up, you will also save on the price.

Our standard devices normally differ in type of design and sensors.
Depending on the application, you can install S+S accessories directly on site.



IMMERSION SLEEVES & ACCESSORIES

472 – 487

Immersion sleeves

TH 08	Immersion sleeves for temperature sensor	**474**
TH	Immersion sleeves for temperature sensor	**476**
THR	Immersion sleeves for temperature sensor	**478**
THE	Immersion sleeves for sleeve sensor	**480**

Mounting accessories

MFT-20-K	Mounting flanges, plastic	**482**
MF-xx-K	Mounting flanges, plastic	**482**
MF-xx-M	Mounting flanges, metal	**483**
KRD-04	Capillary tube gland bracket, plastic	**483**
MK-xx	Mounting brackets	**485**
ESSH	Welding protection sleeve	**485**
TH-Adapter-HW	Immersion sleeve adapter (Honeywell / CentraLine)	**483**

Accessories for Modbus sensors

Modbus-Y	Y-adapter for cable gland	**484**

Accessories for differential pressure switch

ASD-06	Connection set	**484**
ASD-07	Connection nipple (90°)	**484**
ASS-UV	Connection hose, UV-resistant	**484**
DAL	Pressure outlet	**484**
DS-MW	Mounting bracket, sheet steel	**484**

Special accessories and spare parts

WS-01	Sun and ball-impact protection hood	**486**
WS-03	Weather and sun protection hood	**486**
WS-04	Weather and sun protection hood	**486**
PSW-09	Stainless steel paddle (SW)	**486**
PWFS-08	Stainless steel vane (WFS)	**486**
WLP-1	Heat-conductive paste, silicone-free	**486**

Other

Single components, optional	**487**
Special services, special products	**487**

THERMASGARD® TH 08

Immersion sleeves made of stainless steel or brass, nickel-plated, for temperature sensors and measuring transducers
TF 43, TF 65, TM 65, TM 65-Modbus (Tyr 1)

S+S REGELTECHNIK

Dimensional drawing **TH 08 - ms / xx**

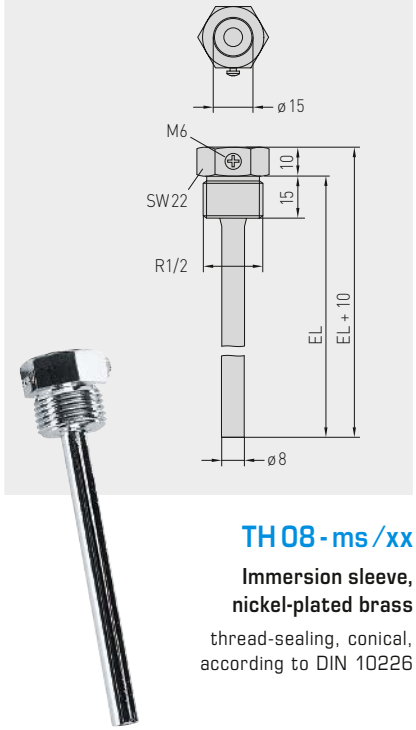

TH 08 - ms / xx

Immersion sleeve, nickel-plated brass

thread-sealing, conical, according to DIN 10226

Dimensional drawing **TH 08 - VA / xx**

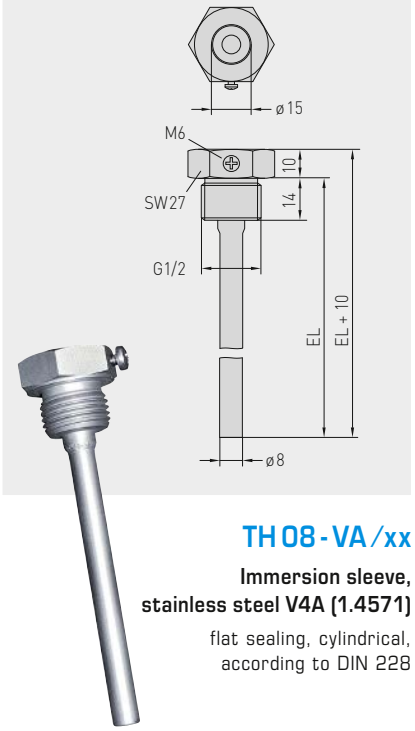

TH 08 - VA / xx

Immersion sleeve, stainless steel V4A (1.4571)

flat sealing, cylindrical, according to DIN 228

Dimensional drawing **TH 08 - VA / xx / 90**

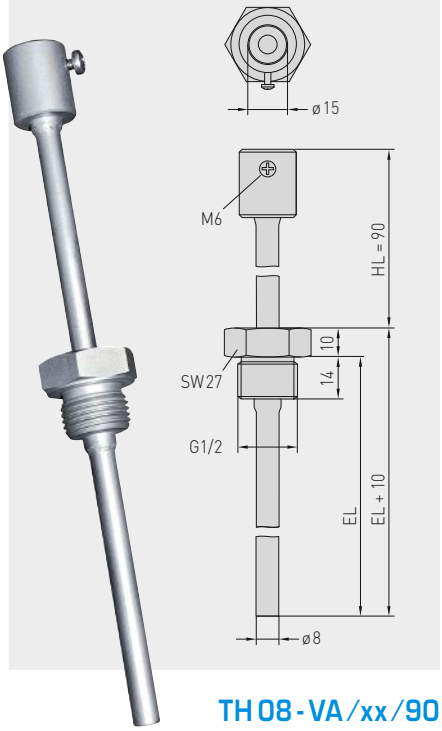

TH 08 - VA / xx / 90

Immersion sleeve, stainless steel V4A (1.4571) with neck tube

flat sealing, cylindrical, according to DIN 228

THERMASGARD® TH 08 Immersion sleeve Ø 8 mm				
Type / WG01	**p_{max} (static)**	**T_{max}**	**Inserted length (EL)**	**Item No.**
TH 08 - ms / xx	**Brass nickel-plated**			**Ø 8** x 0.75 mm
TH08-MS 50MM	10 bar	+150 °C	**50 mm**	7100-0011-0010-132
TH08-MS 100MM	10 bar	+150 °C	**100 mm**	7100-0011-0020-132
TH08-MS 150MM	10 bar	+150 °C	**150 mm**	7100-0011-0030-132
TH08-MS 200MM	10 bar	+150 °C	**200 mm**	7100-0011-0040-132
TH08-MS 250MM	10 bar	+150 °C	**250 mm**	7100-0011-0050-132
TH08-MS 300MM	10 bar	+150 °C	**300 mm**	7100-0011-0060-132
TH08-MS 350MM	10 bar	+150 °C	**350 mm**	7100-0011-0070-132
TH08-MS 400MM	10 bar	+150 °C	**400 mm**	7100-0011-0080-132
TH 08 - VA / xx	**Stainless steel V4A** (1.4571)			**Ø 8** x 0.75 mm
TH08-VA 50MM	40 bar	+600 °C	**50 mm**	7100-0012-0010-132
TH08-VA 100MM	40 bar	+600 °C	**100 mm**	7100-0012-0020-132
TH08-VA 150MM	40 bar	+600 °C	**150 mm**	7100-0012-0030-132
TH08-VA 200MM	40 bar	+600 °C	**200 mm**	7100-0012-0040-132
TH08-VA 250MM	40 bar	+600 °C	**250 mm**	7100-0012-0050-132
TH08-VA 300MM	40 bar	+600 °C	**300 mm**	7100-0012-0060-132
TH08-VA 350MM	40 bar	+600 °C	**350 mm**	7100-0012-0070-132
TH08-VA 400MM	40 bar	+600 °C	**400 mm**	7100-0012-0080-132
TH 08 - VA / xx / 90	**Stainless steel V4A** (1.4571), with neck tube (90mm)			**Ø 8** x 0.75 mm
TH08-VA 50/90MM	40 bar	+600 °C	**50 mm**	7100-0012-0012-132
TH08-VA 100/90MM	40 bar	+600 °C	**100 mm**	7100-0012-0022-132
TH08-VA 150/90MM	40 bar	+600 °C	**150 mm**	7100-0012-0032-132
TH08-VA 200/90MM	40 bar	+600 °C	**200 mm**	7100-0012-0042-132
TH08-VA 250/90MM	40 bar	+600 °C	**250 mm**	7100-0012-0052-132
TH08-VA 300/90MM	40 bar	+600 °C	**300 mm**	7100-0012-0062-132
Note:	Inner diameter of socket 15.0 mm			

INSTRUCTIONS FOR PLANNING AND INSTALLATION

The approaching flow causes the protective tube to vibrate.

If the specified approach velocity is exceeded even by a marginal amount, a negative impact on the protective tube's service life may result (material fatigue).

Please observe permissible approach velocities for stainless steel protective tubes (see graph **TH08-VA**) as well as for brass protective tubes (see graph **TH08-ms**).

Discharge of gases and pressure surges must be avoided as they have a negative influence on the service life and may damage the protective tubes irreparably.

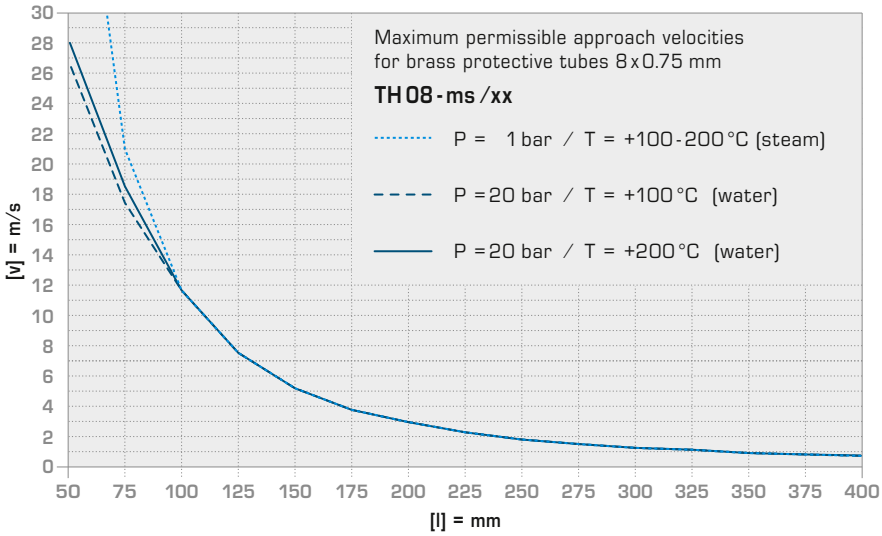

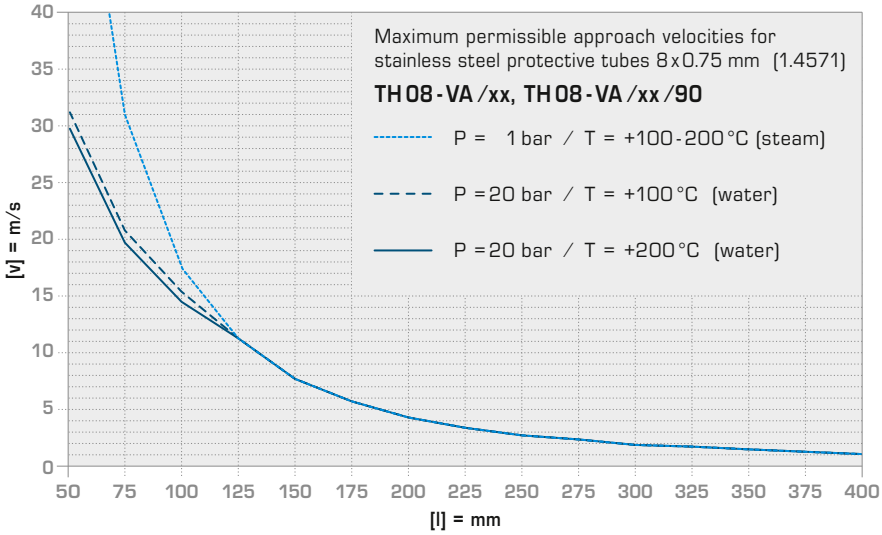

MIXING SECTION

After the mixing of water flows of different temperatures, the issue of temperature stratification means that an adequate distance to the sensor must be observed.

Mixing section **TH 08**

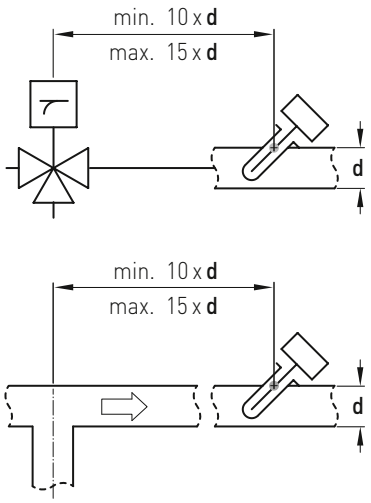

When Copper and Zinc are Not Enough

Uncompromising quality and safety are also paramount in the design of the accessory from S+S. This is why our metal immersion sleeves for duct sensors are made using either nickel plated brass or stainless steel. Brass is an alloy consisting mainly of copper and zinc, which provide good forming and machining properties, mechanical strength, temperature resistance and electrical conductivity.

In contrast to conventional products in the market, however, our brass immersion sleeves feature an additional nickel coating. This ensures their longterm corrosion resistance in minor aggressive media, from air and water to alkaline solutions and diluted acids. At the same time, the nickel layer prevents ingredients in thermally conductive compounds from stripping the copper and causing pitting.

Highest protection against corrosion is provided by immersion sleeves made of stainless steel. Among the available qualities, we chose VA 1.4571 or AISI 316 Ti, a high-grade austenite specialty combining chromium, nickel and molybdenum with an extra titanium content. The alloy has a proven fit particularly in the design of chemical process equipment and technical instruments as well as in waste gas and water treatment. Its corrosion resistance also includes chlorides or salts and more aggressive acids, such as hydrochloric acid (HCl).

Installation scheme **TH 08**

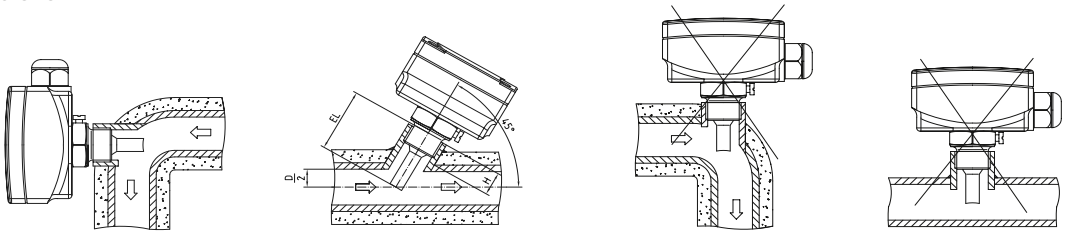

THERMASGARD® TH

**Immersion sleeves made of stainless steel or brass, nickel-plated,
for temperature sensors and measuring transducers TF 54 / TM 54 (form B)**

S+S REGELTECHNIK

Dimensional drawing **TH-ms / xx**

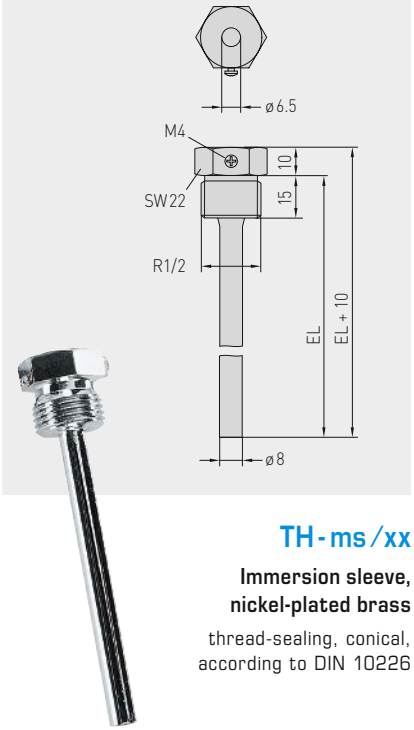

TH-ms / xx

**Immersion sleeve,
nickel-plated brass**

thread-sealing, conical,
according to DIN 10226

Dimensional drawing **TH-VA / xx**

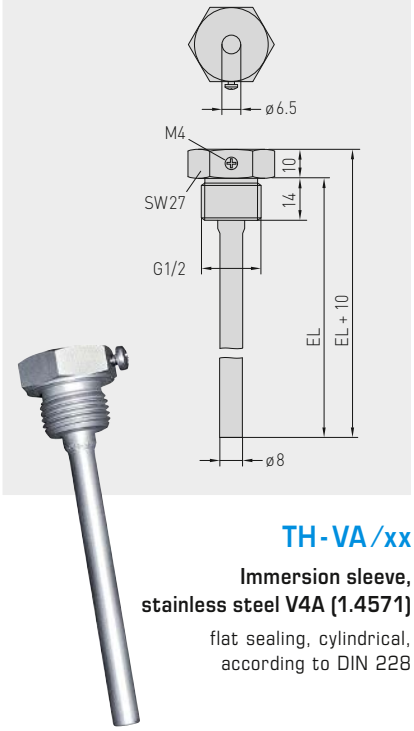

TH-VA / xx

**Immersion sleeve,
stainless steel V4A (1.4571)**

flat sealing, cylindrical,
according to DIN 228

Dimensional drawing **TH-VA / xx / 90**

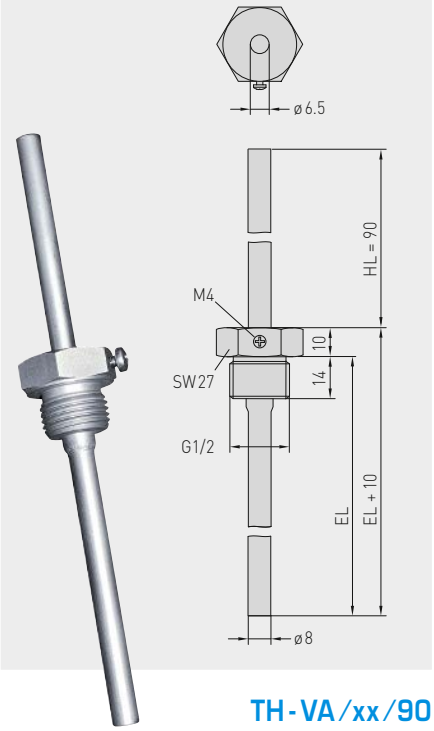

TH-VA / xx / 90

**Immersion sleeve,
stainless steel V4A (1.4571)
with neck tube**

flat sealing, cylindrical,
according to DIN 228

THERMASGARD® TH	Immersion sleeve Ø 8 mm			
Type / WG01	**p_{max} (static)**	**T_{max}**	**Inserted length (EL)**	**Item No.**
TH-ms / xx	**Brass nickel-plated**			**Ø 8** x 0.75 mm
TH-MS 50MM	10 bar	+150 °C	**50 mm**	7100-0011-0010-001
TH-MS 100MM	10 bar	+150 °C	**100 mm**	7100-0011-0020-001
TH-MS 150MM	10 bar	+150 °C	**150 mm**	7100-0011-0030-001
TH-MS 200MM	10 bar	+150 °C	**200 mm**	7100-0011-0040-001
TH-MS 250MM	10 bar	+150 °C	**250 mm**	7100-0011-0050-001
TH-MS 300MM	10 bar	+150 °C	**300 mm**	7100-0011-0060-001
TH-MS 350MM	10 bar	+150 °C	**350 mm**	7100-0011-0070-001
TH-MS 400MM	10 bar	+150 °C	**400 mm**	7100-0011-0080-001
TH-VA / xx	**Stainless steel V4A** (1.4571)			**Ø 8** x 0.75 mm
TH-VA 50MM	40 bar	+600 °C	**50 mm**	7100-0012-0010-001
TH-VA 100MM	40 bar	+600 °C	**100 mm**	7100-0012-0020-001
TH-VA 150MM	40 bar	+600 °C	**150 mm**	7100-0012-0030-001
TH-VA 200MM	40 bar	+600 °C	**200 mm**	7100-0012-0040-001
TH-VA 250MM	40 bar	+600 °C	**250 mm**	7100-0012-0050-001
TH-VA 300MM	40 bar	+600 °C	**300 mm**	7100-0012-0060-001
TH-VA 350MM	40 bar	+600 °C	**350 mm**	7100-0012-0070-001
TH-VA 400MM	40 bar	+600 °C	**400 mm**	7100-0012-0080-001
TH-VA / xx / 90	**Stainless steel V4A** (1.4571), with neck tube (90mm)			**Ø 8** x 0.75 mm
TH-VA 50/90MM	40 bar	+600 °C	**50 mm**	7100-0012-2010-001
TH-VA 100/90MM	40 bar	+600 °C	**100 mm**	7100-0012-2020-001
TH-VA 150/90MM	40 bar	+600 °C	**150 mm**	7100-0012-2030-001
TH-VA 200/90MM	40 bar	+600 °C	**200 mm**	7100-0012-2040-001
TH-VA 250/90MM	40 bar	+600 °C	**250 mm**	7100-0012-2050-001
TH-VA 300/90MM	40 bar	+600 °C	**300 mm**	7100-0012-2060-001
Note:	Inner diameter of socket 6.5 mm			

INSTRUCTIONS FOR PLANNING AND INSTALLATION

The approaching flow causes the protective tube to vibrate.

If the specified approach velocity is exceeded even by a marginal amount, a negative impact on the protective tube's service life may result (material fatigue).

Please observe permissible approach velocities for stainless steel protective tubes (see graph **TH-VA**) as well as for brass protective tubes (see graph **TH-ms**).

Discharge of gases and pressure surges must be avoided as they have a negative influence on the service life and may damage the protective tubes irreparably.

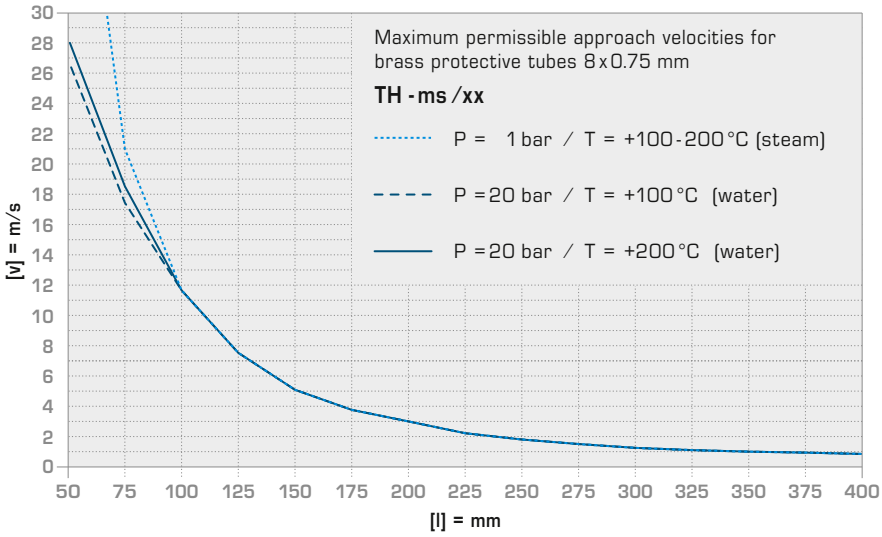

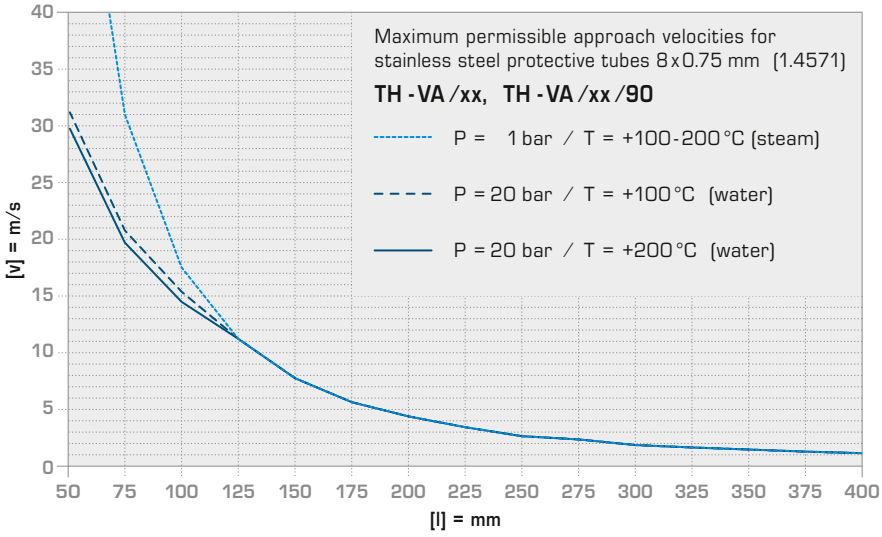

MIXING SECTION

After the mixing of water flows of different temperatures, the issue of temperature stratification means that an adequate distance to the sensor must be observed.

Mixing section **TH**

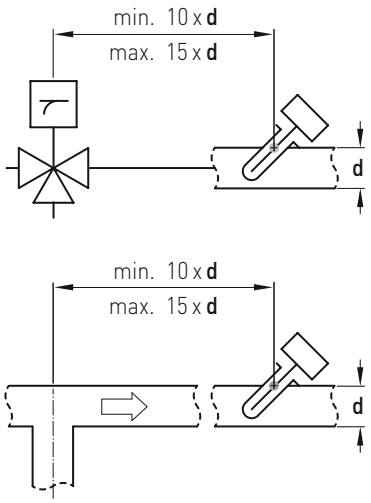

When Copper and Zinc are Not Enough

Uncompromising quality and safety are also paramount in the design of the accessory from S+S. This is why our metal immersion sleeves for duct sensors are made using either nickel plated brass or stainless steel. Brass is an alloy consisting mainly of copper and zinc, which provide good forming and machining properties, mechanical strength, temperature resistance and electrical conductivity.

In contrast to conventional products in the market, however, our brass immersion sleeves feature an additional nickel coating. This ensures their longterm corrosion resistance in minor aggressive media, from air and water to alkaline solutions and diluted acids. At the same time, the nickel layer prevents ingredients in thermally conductive compounds from stripping the copper and causing pitting.

Highest protection against corrosion is provided by immersion sleeves made of stainless steel. Among the available qualities, we chose VA 1.4571 or AISI 316 Ti, a high-grade austenite specialty combining chromium, nickel and molybdenum with an extra titanium content. The alloy has a proven fit particularly in the design of chemical process equipment and technical instruments as well as in waste gas and water treatment. Its corrosion resistance also includes chlorides or salts and more aggressive acids, such as hydrochloric acid (HCl).

Installation scheme **TH**

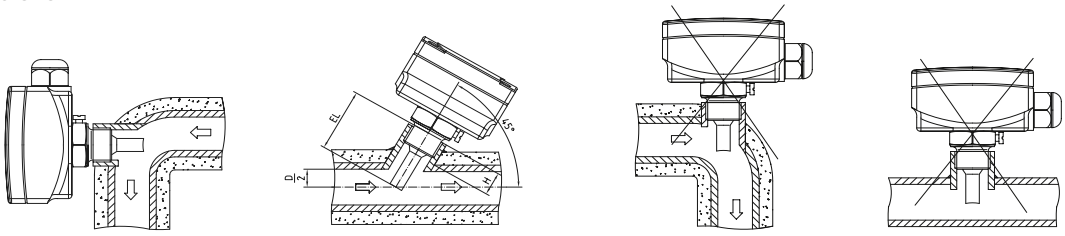

THERMASGARD® THR

Immersion sleeves made of stainless steel or brass, nickel-plated, for temperature controllers ETR (Thor 2)

S+S REGELTECHNIK

Dimensional drawing **THR-ms-08/xx**

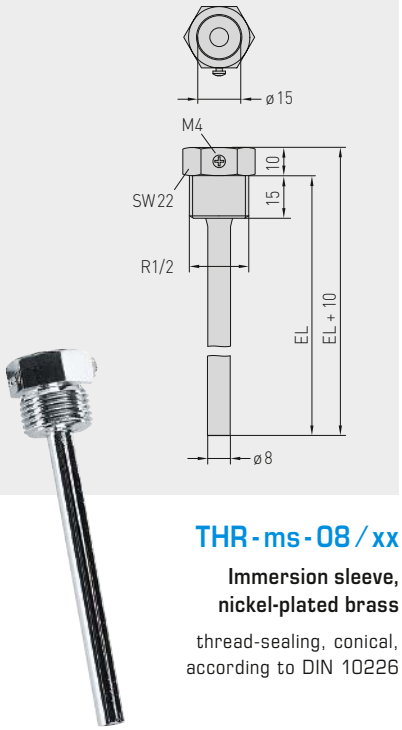

THR-ms-08/xx

Immersion sleeve, nickel-plated brass

thread-sealing, conical, according to DIN 10226

Dimensional drawing **THR-VA-09/xx**

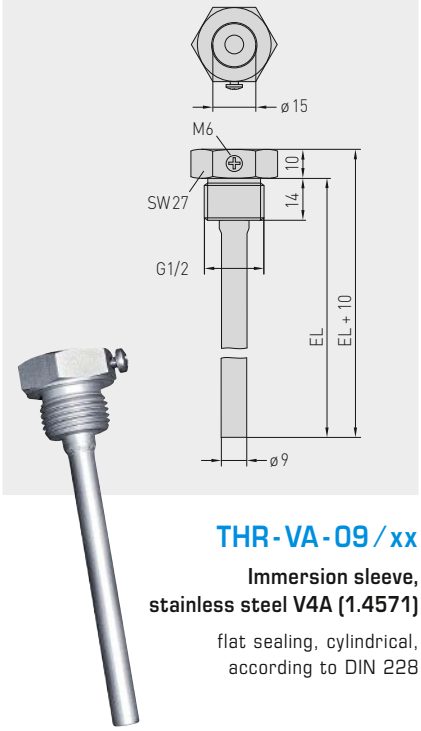

THR-VA-09/xx

Immersion sleeve, stainless steel V4A (1.4571)

flat sealing, cylindrical, according to DIN 228

Dimensional drawing **THR-VA-17/xx**

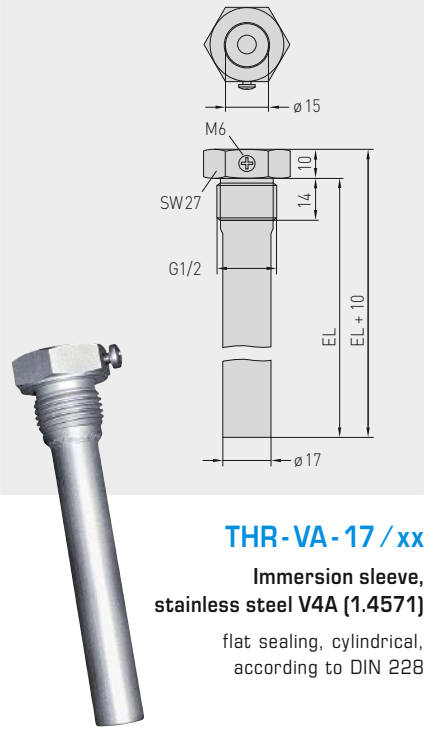

THR-VA-17/xx

Immersion sleeve, stainless steel V4A (1.4571)

flat sealing, cylindrical, according to DIN 228

When Copper and Zinc are Not Enough

Uncompromising quality and safety are also paramount in the design of the accessory from S+S. This is why our metal immersion sleeves for duct sensors are made using either nickel plated brass or stainless steel. Brass is an alloy consisting mainly of copper and zinc, which provide good forming and machining properties, mechanical strength, temperature resistance and electrical conductivity.

In contrast to conventional products in the market, however, our brass immersion sleeves feature an additional nickel coating. This ensures their longterm corrosion resistance in minor aggressive media, from air and water to alkaline solutions and diluted acids. At the same time, the nickel layer prevents ingredients in thermally conductive compounds from stripping the copper and causing pitting.

Highest protection against corrosion is provided by immersion sleeves made of stainless steel. Among the available qualities, we chose VA 1.4571 or AISI 316 Ti, a high-grade austenite specialty combining chromium, nickel and molybdenum with an extra titanium content. The alloy has a proven fit particularly in the design of chemical process equipment and technical instruments as well as in waste gas and water treatment. Its corrosion resistance also includes chlorides or salts and more aggressive acids, such as hydrochloric acid (HCl).

THERMASGARD® THR Immersion sleeve Ø 8 / 9 / 17 mm for **THERMASREG® ETR** (Thor 2)

Type / WG01	p_{max} (static)	T_{max}	Time Constant for Medium: Air	Water	Oil	Inserted Length (EL)	Item No. Ø
THR-ms-08/xx	**Brass nickel-plated**						**Ø 8** x 0.5 mm
THR-MS-08/150	10 bar	+150 °C	106 s	18 s	53 s	**150 mm**	7100-0011-3404-000
THR-MS-08/200	10 bar	+150 °C	106 s	18 s	53 s	**200 mm**	7100-0011-3403-000
THR-VA-09/xx	**Stainless steel V4A** (1.4571)						**Ø 9** x 1.0 mm
THR-VA-09/150	25 bar	+150 °C	92 s	17 s	41 s	**150 mm**	7100-0012-3032-000
THR-VA-09/200	25 bar	+150 °C	92 s	17 s	41 s	**200 mm**	7100-0012-3042-000
THR-VA-17/xx	**Stainless steel V4A** (1.4571)						**Ø 17** x 1.0 mm
THR-VA-17/150	25 bar	+150 °C	–	45 s	55 s	**150 mm**	7100-0012-3033-000
THR-VA-17/200	25 bar	+150 °C	–	45 s	55 s	**200 mm**	7100-0012-3404-000

Ordering example:
THR-ms-08/**150** (Brass immersion sleeve, Ø = 8 mm, **EL = 150** mm)
THR-VA-09/**150** (Stainless steel immersion sleeve, Ø = 9 mm, **EL = 150** mm)
THR-VA-17/**200** (Stainless steel immersion sleeve, Ø = 17 mm, **EL = 200** mm)

Note: inner diameter of socket 15.0 mm

INSTRUCTIONS FOR PLANNING AND INSTALLATION

The approaching flow causes the protective tube to vibrate.

If the specified approach velocity is exceeded even by a marginal amount, a negative impact on the protective tube's service life may result (material fatigue).

Please observe permissible approach velocities for stainless steel protective tubes (see graph **THR-VA**) as well as for brass protective tubes (see graph **THR-ms**).

Discharge of gases and pressure surges must be avoided as they have a negative influence on the service life and may damage the protective tubes irreparably.

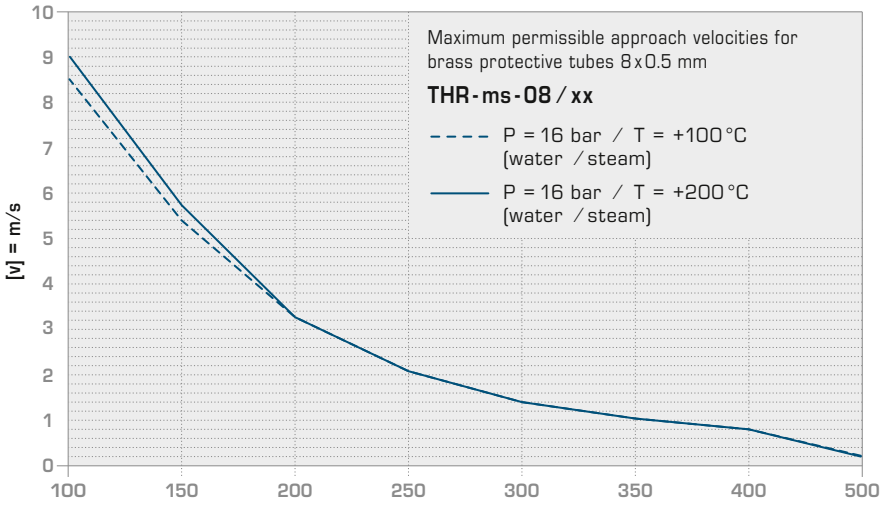

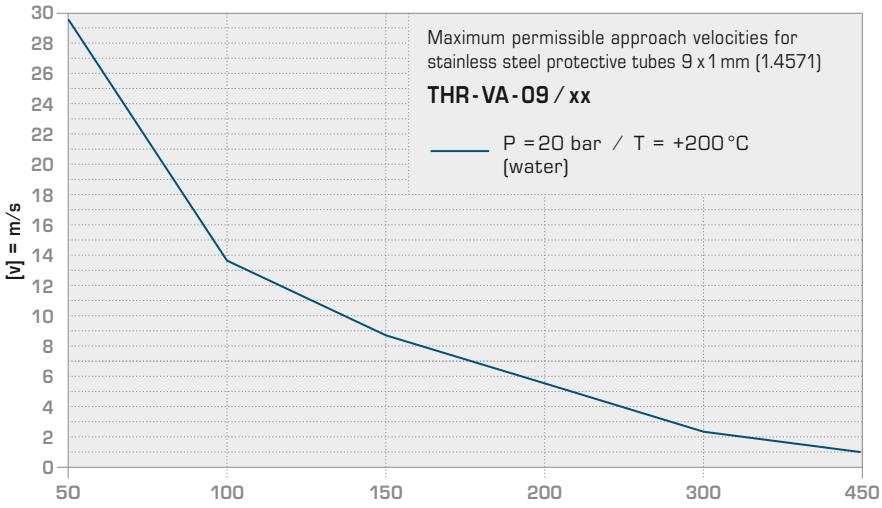

MIXING SECTION

After the mixing of water flows of different temperatures, the issue of temperature stratification means that an adequate distance to the sensor must be observed.

Mixing section **THR**

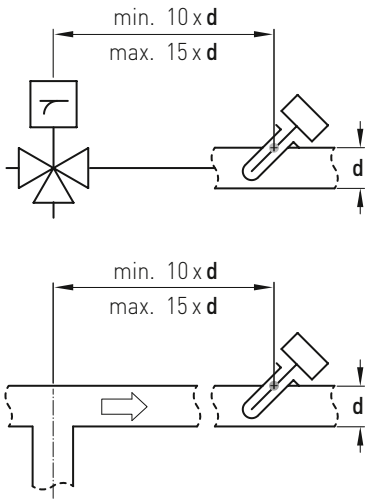

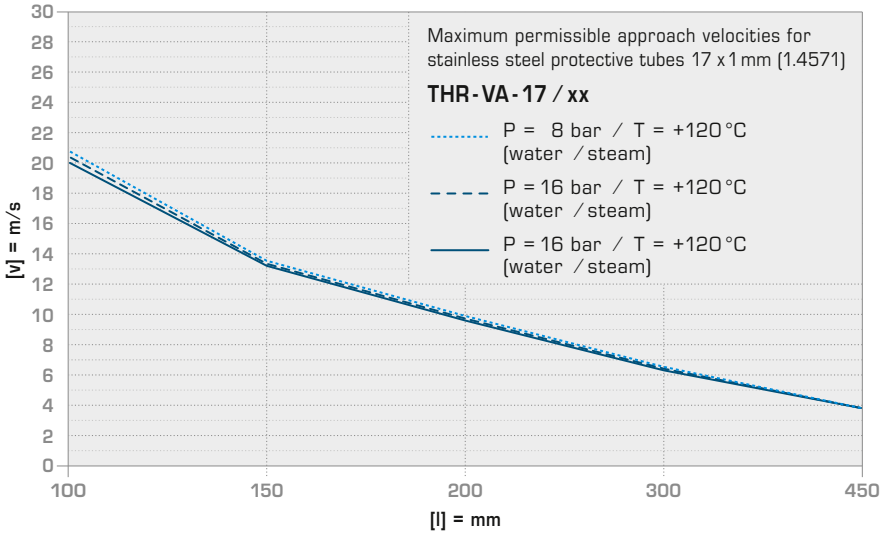

Installation scheme **THR**

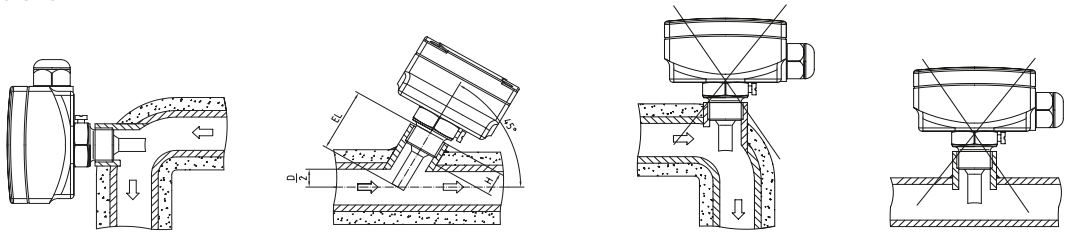

THERMASGARD® THE

Immersion sleeves made of stainless steel or brass, nickel-plated, with adjusting screw, for sleeve sensor HTF / HFTM

S+S REGELTECHNIK

Dimensional drawing **THE - ms - xx**

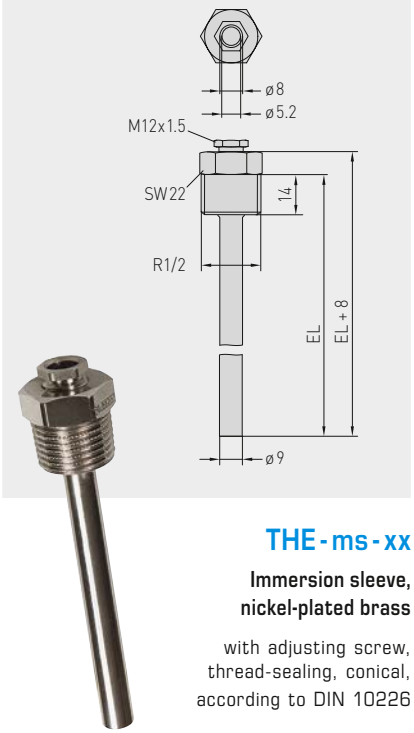

THE - ms - xx

Immersion sleeve, nickel-plated brass

with adjusting screw, thread-sealing, conical, according to DIN 10226

Dimensional drawing **THE - VA - xx**

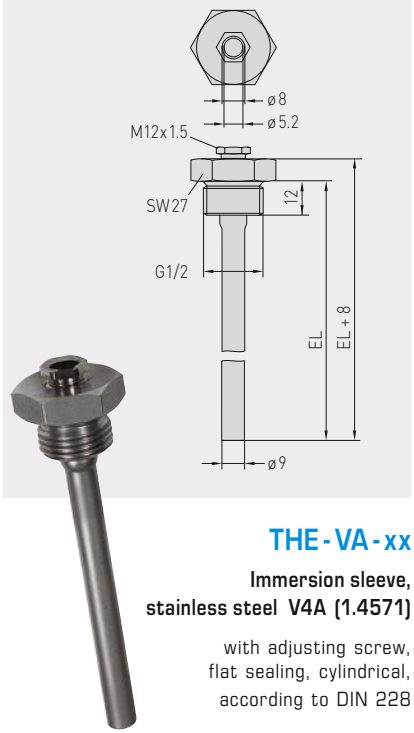

THE - VA - xx

Immersion sleeve, stainless steel V4A (1.4571)

with adjusting screw, flat sealing, cylindrical, according to DIN 228

When Copper and Zinc are Not Enough

Uncompromising quality and safety are also paramount in the design of the accessory from S+S. This is why our metal immersion sleeves for duct sensors are made using either nickel plated brass or stainless steel. Brass is an alloy consisting mainly of copper and zinc, which provide good forming and machining properties, mechanical strength, temperature resistance and electrical conductivity.

In contrast to conventional products in the market, however, our brass immersion sleeves feature an additional nickel coating. This ensures their longterm corrosion resistance in minor aggressive media, from air and water to alkaline solutions and diluted acids. At the same time, the nickel layer prevents ingredients in thermally conductive compounds from stripping the copper and causing pitting.

Highest protection against corrosion is provided by immersion sleeves made of stainless steel. Among the available qualities, we chose VA 1.4571 or AISI 316 Ti, a high-grade austenite specialty combining chromium, nickel and molybdenum with an extra titanium content. The alloy has a proven fit particularly in the design of chemical process equipment and technical instruments as well as in waste gas and water treatment. Its corrosion resistance also includes chlorides or salts and more aggressive acids, such as hydrochloric acid (HCl).

THERMASGARD® THE Immersion sleeve Ø 9 mm for **THERMASGARD® HTF / HFTM**

Type / WG01	p_{max} static	T_{max}	Inserted Length (EL)	Item No.
THE - ms / xx	**Brass nickel-plated**			**Ø 9** x 1,0 mm
THE-MS 50MM	16 bar	+130 °C	**50 mm**	7100-0011-6010-002
THE-MS 100MM	16 bar	+130 °C	**100 mm**	7100-0011-6020-002
THE-MS 150MM	16 bar	+130 °C	**150 mm**	7100-0011-6030-002
THE-MS 200MM	16 bar	+130 °C	**200 mm**	7100-0011-6040-002
THE-MS 250MM	16 bar	+130 °C	**250 mm**	7100-0011-6050-002
THE - VA / xx	**Stainless steel V4A** (1.4571)			**Ø 9** x 1,0 mm
THE-VA 50MM	40 bar	+200 °C	**50 mm**	7100-0012-6010-002
THE-VA 100MM	40 bar	+200 °C	**100 mm**	7100-0012-6020-002
THE-VA 150MM	40 bar	+200 °C	**150 mm**	7100-0012-6030-002
THE-VA 200MM	40 bar	+200 °C	**200 mm**	7100-0012-6040-002
THE-VA 250MM	40 bar	+200 °C	**250 mm**	7100-0012-6050-002
THE-VA 300MM	40 bar	+200 °C	**300 mm**	7100-0012-6060-002
THE-VA 400MM	40 bar	+200 °C	**400 mm**	7100-0012-6080-002
Ordering example:	THE - ms - **150** (Brass immersion sleeve, Ø = 9 mm, **EL = 150** mm) THE - VA - **150** (Stainless steel immersion sleeve, Ø = 9 mm, **EL = 150** mm) Other inserted lengths on request			
Note:	inner diameter of socket 5.2 mm, with **adjusting screw** M12 x 1.5			

THERMASGARD® THE

Immersion sleeves made of stainless steel or brass, nickel-plated, with adjusting screw, for sleeve sensor HTF/HFTM

INSTRUCTIONS FOR PLANNING AND INSTALLATION

The approaching flow causes the protective tube to vibrate.

If the specified approach velocity is exceeded even by a marginal amount, a negative impact on the protective tube's service life may result (material fatigue).

Please observe permissible approach velocities for stainless steel protective tubes (see graph **THE-VA**) as well as for brass protective tubes (see graph **THE-ms**).

Discharge of gases and pressure surges must be avoided as they have a negative influence on the service life and may damage the protective tubes irreparably.

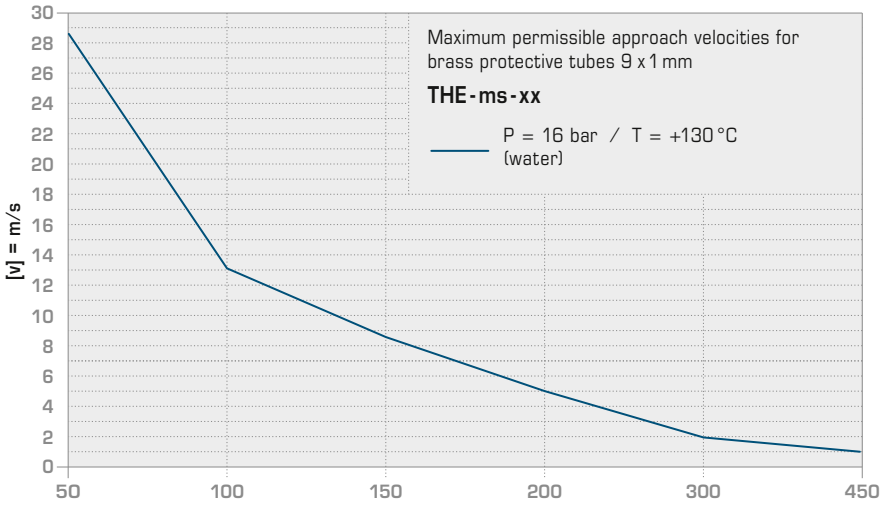

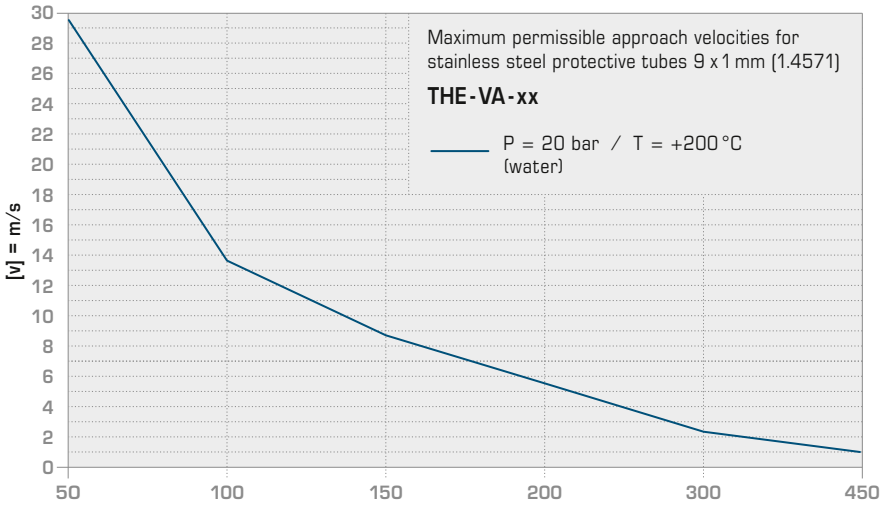

MIXING SECTION

After the mixing of water flows of different temperatures, the issue of temperature stratification means that an adequate distance to the sensor must be observed.

Mixing section **THE**

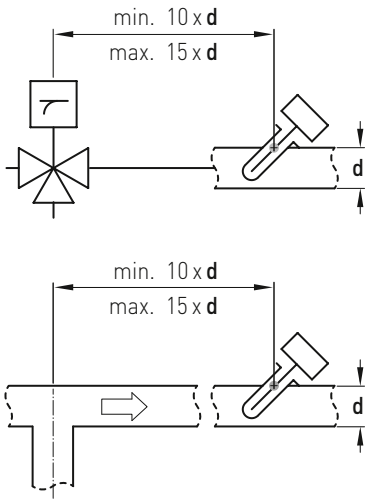

Installation scheme **THE**

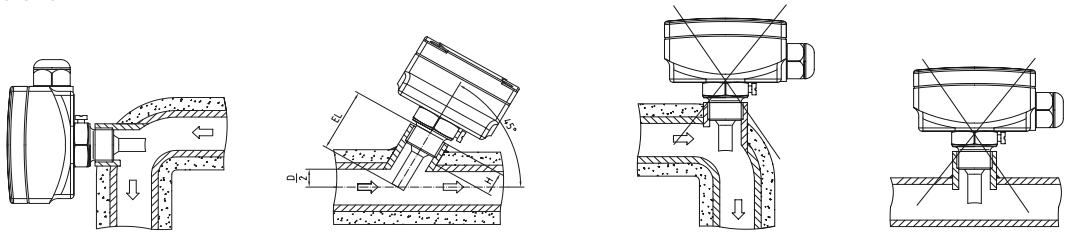

Mounting flange, plastic

Dimensional drawing **MF-06-K**

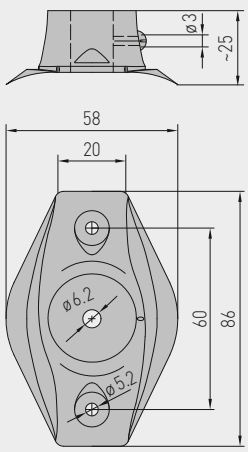

MF-06-K

Mounting flange, plastic

Dimensional drawing **MF-15-K**

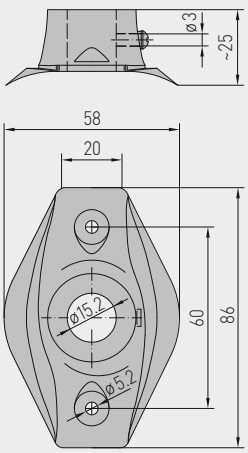

MF-15-K

Mounting flange, plastic

Dimensional drawing **MF-16-K**

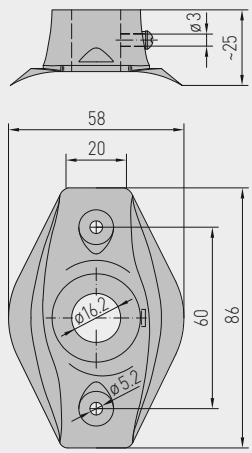

MF-16-K

Mounting flange, plastic

Dimensional drawing **MFT-20-K**

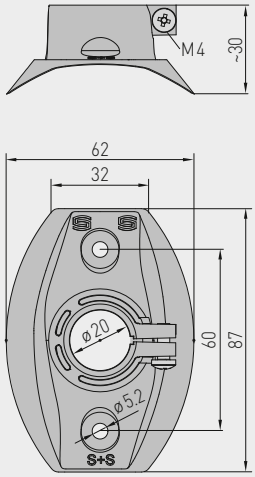

MFT-20-K

Mounting flange, plastic









Type / WG01	Mounting flange, plastic	Tube Gland	T_{max}	Item No.
MF-K	for **metal** protective tubes!			
MF-06-K	Mounting flange, plastic, approx. 58 x 86 x 25 mm for mean value temperature sensors MWTF and mean value temperature measuring transducers MWTM	Ø 6.2 mm	+100 °C	7100-0030-1000-000
MF-14-K	Mounting flange, plastic, approx. 58 x 86 x 25 mm for duct humidity sensors KFF / KFTF and pendulum room humidity sensors RPFF / RPFTF as well as for duct air flow monitors KLGF / KLSW	Ø 14.2 mm	+100 °C	7100-0030-2000-000
MF-15-K	Mounting flange, plastic, approx. 58 x 86 x 25 mm for temperature sensors TF (series Tyr 1) and temperature measuring transducers TM (series Tyr 1)	Ø 15.2 mm	+100 °C	7100-0032-0000-000
MF-16-K	Mounting flange, plastic, approx. 58 x 86 x 25 mm for duct air quality sensors KLQ	Ø 16.2 mm	+100 °C	7100-0030-0000-000
MF-20-K	Mounting flange, plastic, approx. 58 x 86 x 25 mm for duct sensors KCO$_2$, KLQ-CO$_2$, KH	Ø 20.2 mm	+100 °C	7100-0030-4000-000
MFT-K	for **PLEUROFORM** multi-channel pipes!			
MFT-20-K	Mounting flange, plastic, approx. 62 x 87 x 30 mm for duct sensors (series Tyr 2)	Ø 20 mm	+100 °C	7000-0031-0000-000

Dimensional drawing **KRD-04**

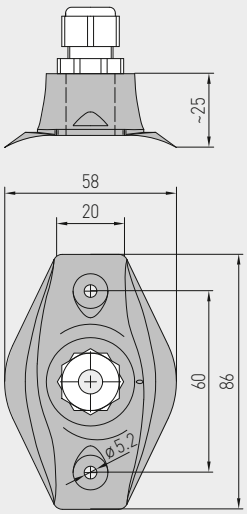

Dimensional drawing **MF-06-M**

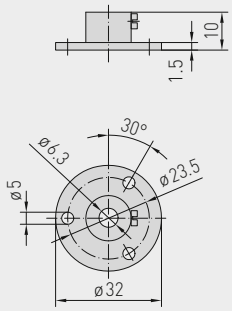

Dimensional drawing **MF-14-M**

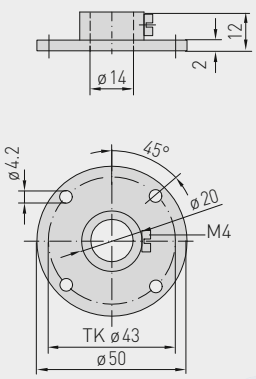

Dimensional drawing **TH-ADAPTER-HW**

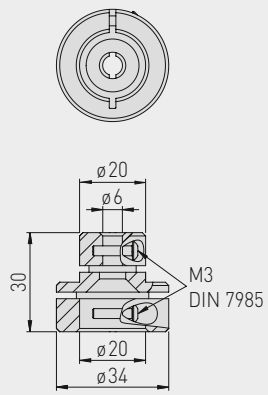

KRD-04

Capillary tube gland bracket, plastic



MF-06-M

Mounting flange, metal



MF-14-M

Mounting flange, metal



TH-ADAPTER-HW

Immersion sleeve adapter, metal





Type / WG01	Mounting flange, metal	Tube Gland	T_{max}	Item No.
MF-M	for **metal** protective tubes!			
MF-06-M	Mounting flange, metal (galvanised steel), Ø 32 mm, for temperature sensors TF (form B) and temperature measuring transducers TM (form B) as well as for mean value temperature sensors MWTF and mean value temperature measuring transducers MWTM	Ø 6.3 mm	+700 °C	7100-0030-5000-000
MF-14-M	Mounting flange, metal (galvanised steel), Ø 50 mm, for duct humidity sensors KFF / KFTF and pendulum room humidity sensors RPFF / RPFTF	Ø 14.0 mm	+700 °C	7100-0030-6000-000

Type / WG01	apillary tube gland bracket, plastic	Item No.
KRD-04	Capillary tube gland bracket, plastic, approx. 58 x 86 x 25 mm (M 16 x 1.5) for frost protection thermostats (e.g. for air ducts) as well as for mean value temperature sensors MWTF and mean value temperature measuring transducers MWTM	7100-0030-7000-000

Type / WG01	Immersion sleeve adapter, metal	Item No.
TH-ADAPTER-HW	Metal immersion sleeve adapter (adaptation Ø 20 mm / Ø 6 mm) for mounting S+S temperature sensors from the TF and TM series in immersion sleeves by Honeywell / CentraLine of the types VFFT, VFL, VFNT, VFLN	7100-0037-0001-000

Accessories for differential pressure switches and special accessories for Modbus connection

Dimensional drawing **ASD-06**

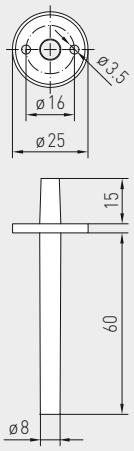

Dimensional drawing **ASD-07**

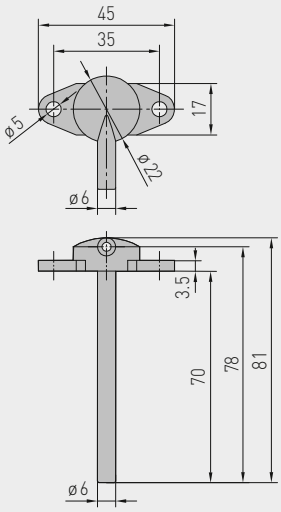

Dimensional drawing **DAL-01**

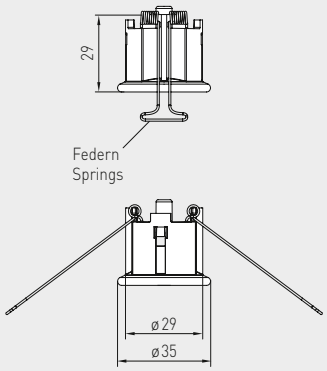

NEW

Dimensional drawing **MODBUS-Y**

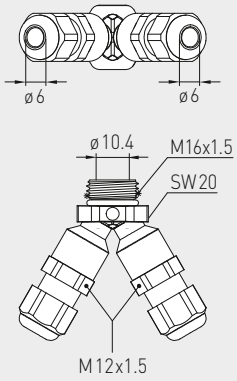

ASD-06

Connection set
(straight nipples)



ASD-07

Connection nipples
(at 90 degree angle)



DAL

Pressure outlet



MODBUS-Y

Y-adapter as bypass
for bus connection



Type / WG01	Accessories for differential pressure switches	Item No.
ASD-06	**Connection set** consisting of 2 connection nipples (straight) made of ABS, 2 m PVC hose, soft, and 4 tapping screws)	7100-0060-3000-000
ASD-07	**2 connection nipples** (at 90 degree angle) made of ABS	7100-0060-7000-000
ASS-UV 100M	**Connecting hose**, UV-resistant, Ø 4 mm, 1 roll (100 m)	7100-0060-3100-000
DAL-01	**Pressure outlet** for ceiling and in-wall installation as a pressure reference point	7300-0060-3000-001
DAL-02	for hose attachment	7300-0060-3000-100
DAL-03	as a pressure reference point, with sinter filter made of stainless steel **V4A** (1.4404)	7300-0060-3000-200

Type / WG01	Accessories for differential pressure switches DS1, DS2	Item No.
DS-MW-Z	Sheet steel **mounting angle** in **Z-Form**	7100-0063-0000-000
DS-MW-L	Sheet steel **mounting angle** in **L-Form**	7100-0063-1000-000
DS-MW-U	Sheet steel **mounting angle** in **U-Form**	7100-0060-9000-000

Type / WG01	Special accessories for Modbus connection	Item No.
MODBUS-Y	**Y-adapter** for cable gland M16x 1.5 (on 2x M12x 1.5), made of plastic	7000-0005-0002-100

Dimensional drawing **MK-05-M**

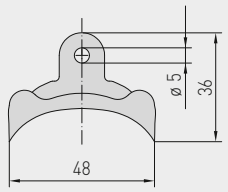

Dimensional drawing **MK-05-K**

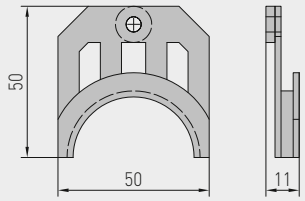

Dimensional drawing **KVSS**

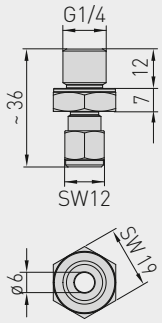

Dimensional drawing **KVST**

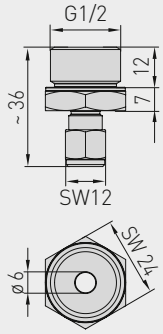

Dimensional drawing **ESSH**

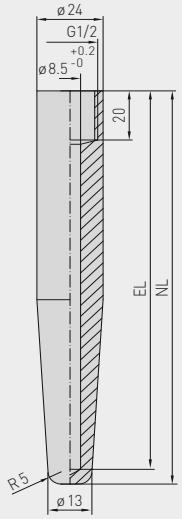

MK-05-K

Galvanised steel
mounting clamps



MK-05-M

Mounting clamps,
plastic



KVST

Clamp union
with clamp ring



ESSH

Welding protective
sleeve



Type / WG01	Miscellaneous mounting accessories	Item No.
MK-05-M	Galvanised steel **mounting clamps** (6 pieces) for front protection thermostats and mean value sensors	7100-0034-0000-000
MK-05-K	Plastic **mounting clamps** (6 pieces) for frost protection thermostats	7100-0034-1000-000
WH-20	**Wall bracket** for duct hygrostats KH	1200-0010-4000-000
KVST	**Clamp union** with clamp ring PTFE, Ø 6 mm	7100-0032-0110-000
KVSS	**Clamp union** with cutting ring VA, Ø 6 mm	7100-0032-1000-000
SPB1	**Strap** for surface-contact sensors	7100-0035-0000-000

Type / WG01	Special accessories	Item No.
	Welding protecting sleeves, G ½" straight internal pipe thread, stainless steel **V4A** (1.4571), other materials on request,	
ESSH 100MM	for immersion sleeves EL = 100 mm, P_{max} = 100 bar	7100-0052-0020-001
ESSH 150MM	for immersion sleeves EL = 150 mm, P_{max} = 100 bar	7100-0052-0030-001
ESSH 200MM	for immersion sleeves EL = 200 mm, P_{max} = 100 bar	7100-0052-0040-001

Dimensional drawing **WS-01**

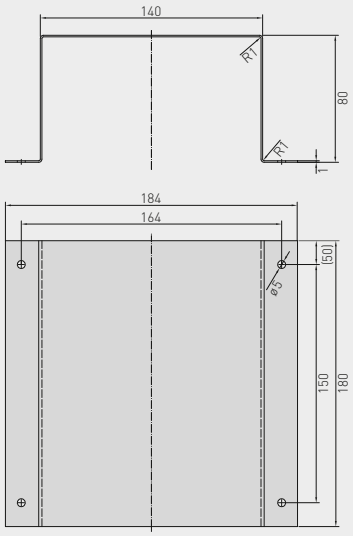

Dimensional drawing **WS-03**

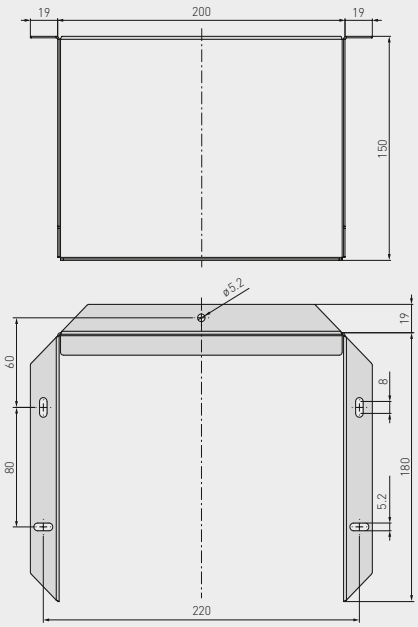

Dimensional drawing **WS-04**

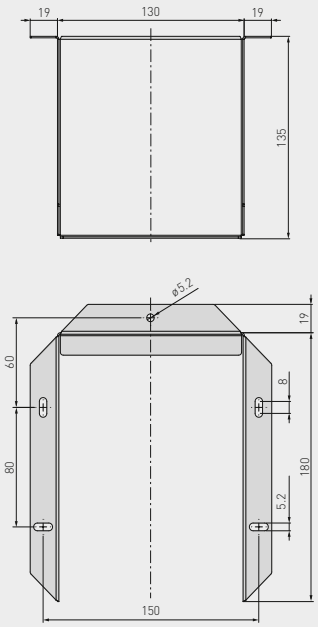

WS-01

Sun and
ball-impact protection hood



WS-03

Weather and
sun protection hood

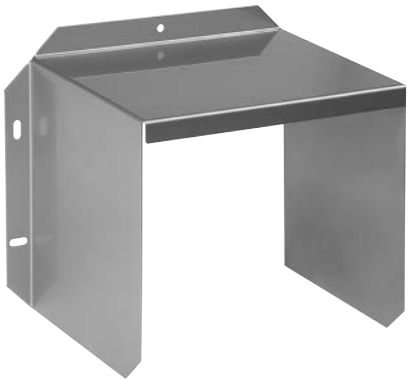

WS-04

Weather and
sun protection hood



Type / WG01	Special accessories and spare parts	Item No.
WS-01	**Sun and ball-impact protection hood,** 184 x 180 x 80 mm, stainless steel **V2A** (1.4301)	7100-0040-2000-000
WS-03	**Weather and sun protection hood,** 200 x 180 x 150 mm, stainless steel **V2A** (1.4301)	7100-0040-6000-000
WS-04	**Weather and sun protection hood,** 130 x 180 x 135 mm, stainless steel **V2A** (1.4301)	7100-0040-7000-000
PSW-09	1 set of **stainless steel paddles** 1-8" (4 pieces), 29 x 34/60/89/157 mm for flow monitors SW	7700-0010-1000-000
PWFS-08	**Stainless steel vane** for vane switch WFS	7700-0010-2000-000
WLP-1	**Heat-conductive paste**, silicone-free (2 ml)	7100-0060-1000-000

Individual components WG01		Item No.
FET		7100-0022-4000-000
KTY 81-210		7100-0022-0000-000
LM235Z	(TCR = 10 mV / K; 2.73 V at 0°C), KP10	7100-0022-1000-000
NI1000	(according to DIN EN 43760, class B, TKR = 6180 ppm / K)	7100-0020-9000-000
NI1000TK5000	(according to DIN EN 43760, class B, TKR = 5000 ppm / K), LG-Ni 1000	7100-0021-0000-000
NTC 1,8 KOHM	NTC 1.8 K	7100-0021-2000-001
NTC 10 KOHM PRECON	NTC 10 K Precon	7100-0021-9000-000
NTC 20 KOHM	NTC 20 K	7100-0021-6000-000
NTC 30 KOHM	NTC 30 K	7100-0021-7000-000
NTC 50 KOHM	NTC 50 K	7100-0021-8000-000
PT100 KLASSE B	(according to DIN EN 60751, class B)	7100-0020-1000-000
PT100 1/2 DIN	(according to DIN EN 60751, class A)	7100-0020-2000-000
PT100 1/3 DIN	(according to DIN EN 60751, class A)	7100-0020-3000-000
PT1000 KLASSE B	(according to DIN EN 60751, class B)	7100-0020-5000-000
PT1000 1/2 DIN	(according to DIN EN 60751, class A)	7100-0020-6000-000
PT1000 1/3 DIN	(according to DIN EN 60751, class A)	7100-0020-7000-000
PT1000 1/10 DIN	(according to DIN EN 60751, class AA)	7100-0020-8000-000
Note:	Other sensors on request.	

Optional services WG01		Unit
Double sensor		**plus 50 %** of instrument price
1 / 2 DIN	(according to DIN EN 60751, class AA)	Per piece
1 / 3 DIN	(according to DIN EN 60751, class AA)	Per piece
1 / 10 DIN	(according to DIN EN 60751, class AA)	Per piece
Connection type	**4-wire connection** with ceramic base, head form B	Per piece
	4-wire connection with circuit board, box head	Per piece
Protection class	**IP 65** at head form B	Per piece
	IP 68 (Sensor sleeve watertight compound-filled) for cable sensors	Per piece

Custom-made products (for 25 or more pieces)			Unit
Silicone-free sensor production			Per piece
Factory test certificate	1-point certificate		One-time cost
(per device)	2-point certificate		One-time cost
	3-point certificate		One-time cost
	Each additional test point		One-time cost
Custom-made products	Setup costs for custom-made products		One-time cost
Special paintwork	Set-up costs for special paintwork		one-off (net)
	plus costs for special paintwork	**from 25 piece**	per piece
		from 50 piece	per piece
Special print	Set-up costs incl. stereotype production, **1 colour**		one-off (net)
(with stereotype)	Set-up costs incl. stereotype production, **2 colour**		one-off (net)
	plus costs for special print	**from 25 piece**	per piece / colour
		from 50 piece	per piece / colour
		from 100 piece	per piece / colour
		from 250 piece	per piece / colour
		from 500 piece	per piece / colour
Printing customer logo on enclosure cover	Setup costs for printing on enclosure cover		One-time cost
(for 200 covers of one enclosure series)	Plus printing costs, 2-colour, printing on enclosure cover		Per piece
Labelling with customer logo	Setup costs for labelling		One-time cost
	Plus costs for labelling		Per piece

S+S REGELTECHNIK

Conversion table – Anglo-American units of measurement

TEMPERATURE		
Fahrenheit	**°F → °C** (°F – 32) ÷ 1.8 = (°C)	**°C → °F** (°C x 1.8) + 32 = (°F)
LENGTH		
Inches	**"/ inch → mm** ("/ inch) × 25.4 = (mm)	**mm → "/ inch** (mm) ÷ 25.4 = ("/ inch)
Feet	**ft → m** (ft) × 0.3048 = (m)	**m → ft** (m) ÷ 0.3048 = (ft)
Yards	**yd → m** (yd) × 0.9144 = (m)	**m → yd** (m) ÷ 0.9144 = (yd)
Miles	**mi → km** (mi) × 1.609344 = (km)	**km → mi** (km) ÷ 1.609344 = (mi)
AREA		
Square inches	**in² → mm²** (in²) × 645.16 = (mm²)	**mm² → in²** (mm²) ÷ 645.16 = (in²)
	in² → cm² (in²) × 6.4516 = (cm²)	**cm² → in²** (cm²) ÷ 6.4516 = (in²)
Square feet	**ft² → m²** (ft²) × 0.09290304 = (m²)	**m² → ft²** (m²) ÷ 0.09290304 = (ft²)
Square yards	**yd² → m²** (yd²) × 0.83612736 = (m²)	**m² → yd²** (m²) ÷ 0.83612736 = (yd²)
VOLUME		
Cubic inches	**in³ → cm³** (in³) × 16.387064 = (cm³)	**cm³ → in³** (cm³) ÷ 16.387064 = (in³)
Cubic feet	**ft³ → m³** (ft³) × 0.028316846592 = (m³)	**m³ → ft³** (m³) ÷ 0.028316846592 = (ft³)
Cubic yards	**yd³ → m³** (yd³) × 0.764554857984 = (m³)	**m³ → yd³** (m³) ÷ 0.764554857984 = (yd³)
US Gallons	**Imp. gal. → dm³** (Imp. gal.) × 4.54609 = (dm³)	**dm³ → Imp. gal.** (dm³) ÷ 4.54609 = (Imp. gal.)
US-Gallone	**US. liq. gal. → dm³** (US. liq. gal.) × 3.785412 = (dm³)	**dm³ → US. liq. gal.** (dm³) ÷ 3.785412 = (US. liq. gal.)
MASS		
Ounces	**oz. → g** (oz.) × 28.349523 = (g)	**g → oz.** (g) ÷ 28.349523 = (oz.)
Pounds	**lb. → kg** (lb.) × 0.45359237 = (kg)	**kg → lb.** (kg) ÷ 0.45359237 = (lb.)
British tons (long tons)	**tn. l. → kg** (tn. l.) × 1016.0469088 = (kg)	**kg → tn. l.** (kg) ÷ 1016.0469088 = (tn. l.)
US tons (short tons)	**tn. sh. → kg** (tn. sh.) × 907.18474 = (kg)	**kg → tn. sh.** (kg) ÷ 907.18474 = (tn. sh.)

Sensor type	Manufacturer *	RTF	ATF	TF 65 + MF-15-K	TF 65 + TH 08	ALTF	HTF
10K3A1 NTC 10 kOhm	**Aquatrol**	●	●	●	●	●	●
	Honeywell	T 8120 B	T 7416 A T 7043 E	●	T 7106 A T 7043 F	T 7044 C	T 7076 D
	Johnson	●	●	TE-6361 V TE-636 GV-1	●	●	●
	Satchwell	●	DOT 10 K2 DOS 10 K2	DDT 10 K1	DWT 10 K1 DST 10 K1	●	●
	Seachange	SEN / PTR / ROM	SEN / PR / OAT	SEN / PR / DCT	SEN / PR / IMM	SEN / PR / CLP	SEN / FL
	Trend	TE-TS	TE-TO	TE-TD	TE-TI	TE-TC	●
10K4A1 NTC 10 kOhm Precon	**Andover**	TTS-S Series	●	TT-O Series	TT-I Series	TT-ST	●
	Delta Controls	●	●	●	●	●	●
	Siebe	●	●	●	●	●	●
	York (< 40°C)	●	●	●	●	●	●
20K6A1 NTC 20 kOhm	**Honeywell**	T 7460 H T 7470 A DRF 20-S RF 20 T 4712	AF 20 DAF 20 T 7416 A1022	LF 20	VF 20 T VF 20 NT VF 20 L VF 20 LN WPF 20 T 7425 A	VF 20 A WPF 20 A	KFT 20 KFT 20 B DKF 20
PT 100 DIN EN 60 751 class B	**Sauter**	EGT 430 / F 011	●	EGT 466 / F 011 EGT 447 / F 011	●	●	EGT 456 / F 011
	Serck	●	●	●	●	●	●
	Siemens / Landis & Staefa	QAA 100 QAA 2010	QAC 2010	FK-TP / 200 QAM 2110	QAE 2110	QAD 2010	QAP 2010
PT 1000 DIN EN 60 751 class B	**Honeywell**	T 7412	T 7416 A1014	T 7411	T 7413	T 7414	●
	Sauter	EGT 430 / F 101	EGT 401 / F 101	EGT 446 / F 101 EGT 447 / F 101	–	EGT 411 / F 101	EGT 456 / F 101
	Serck	●	●	●	●	●	●
	Siebe	TS-5811	●	●	●	●	●
	Cylon	●	●	●	●	●	●
Ni 1000 DIN EN 43 760	**Sauter**	EGT 330 / F 101	EGT 301 / F 101	EGT 346 / F 101 EGT 347 / F 101 EGT 348 / F 101	EGT 346 / F 101 EGT 347 / F 101 EGT 348 / F 101	EGT 311 / F 101	EGT 354 / F 101 EGT 356 / F 101
Ni 1000 / TCR Ni1000 TK 500	**Siemens / Landis & Staefa**	QAA 24 QAA 25 QAA 26 QAA 27 QAA 64	QAC 22	QAM 2120	QAE 2120	QAD 22 QAD 26	QAP 21 QAP 22 QAZ 21
SAT 1	**Satchwell**	DRT DU, DUS, DUSF	DOT 0002 DOS 0002	DDT 0001	DWT 0001 DST 0001	●	DDU
FeT (T1)	**Landis & Staefa**	QAA 2040 FR-T1	FW-T1	QAM 2140 FK-T1	QAE 2140 FT-T1	FA-T1	QAP 2040 FTK-T1
TAC 1 NTC 1.8 kOhm	**TAC Schneider**	●	●	●	●	●	●
2.2 K3 A1 NTC 2.2 kOhm	**Ambiflex**	RTN 3060	ETN 3060	DTN 3060	ITN 3060	CTN 3060	●
	Johnson	TE-6344 P	TE-6343 P	TE-6341 P TE-6341 V TE-634 GV-1	TE-6342 P	–	–
3 K3 A1 NTC 3 kOhm	**Alerton**	MS-1000 Series TS-1050	●	●	●	●	●
3 K6 A1 NTC 30 kOhm	**Drayton**	A 701	A 702	●	A 703	A 704	●
LM235Z (KP10)	**Kieback & Peter**	TR TD	TA TAD	TLS TLD	TV, TVD TDN, TVP	TAV TAVD	TEV TKV

* Manufacturer names are brands and / or trademarks of the respective companies.

S+S REGELTECHNIK

Sensor type (+)
Thermistor elements with positive temperature coefficient –
Temperature ranges (temperature/resistance)

FeT (T1)		**KTY 81-210**		**LM 235 Z** (KP10)		**Ni 1000** according to DIN EN 43760 TCR= 6180 ppm/K		**Ni 1000 - TK 5000** (LG-Ni 1000) TCR= 5000 ppm/K		**PT 100** according to DIN EN 60751 TCR= 3850 ppm/K		**PT 1000** according to DIN EN 60751 TCR= 3850 ppm/K	
°C	Ω	°C	Ω	°C	mV	°C	Ω	°C	Ω	°C	Ω	°C	Ω
– 50	–	**– 50**	1030	**– 50**	–	**– 50**	743	**– 50**	790.8	**– 50**	80.3	**– 50**	803
– 40	–	– 40	1135	– 40	2330	– 40	791	– 40	826.8	– 40	84.3	– 40	843
– 30	1935	– 30	1247	– 30	2430	– 30	842	– 30	871.7	– 30	88.2	– 30	882
– 20	2030	– 20	1367	– 20	2530	– 20	893	– 20	913.4	– 20	92.2	– 20	922
– 15	2078	– 15		– 15	2580	– 15	920	– 15	934.7	– 15	94.1	– 15	941
– 10	2027	– 10	1495	– 10	2630	– 10	946	– 10	956.2	– 10	96.1	– 10	961
– 5	2176	– 5		– 5	2680	– 5	973	– 5	978.0	– 5	98.0	– 5	980
0	2226	0	1630	0	2730	0	1000	0	1000.0	0	100.0	0	1000
1	2236	1		1	2740	5	1028	1	1004.4	5	102.0	5	1020
2	2246	2		2	2750	10	1056	2	1008.9	10	103.9	10	1039
3	2256	3		3	2760	15	1084	3	1013.3	15	105.8	15	1058
4	2266	4		4	2770	20	1112	4	1017.8	20	107.8	20	1078
5	2276	5		5	2780	25	1142	5	1022.3	25	109.8	25	1098
6	2286	6		6	2790	30	1171	6	1026.7	30	111.7	30	1117
7	2298	7		7	2800	35	1200	7	1031.2	35	113.6	35	1136
8	2306	8		8	2810	40	1230	8	1035.8	40	115.5	40	1155
9	2316	9		9	2820	45	1261	9	1040.3	45	117.5	45	1175
10	2326	10	1772	10	2830	50	1291	10	1044.8	50	119.4	50	1194
11	2337	11		11	2840	55	1322	11	1049.3	55	121.3	55	1213
12	2347	12		12	2850	60	1353	12	1053.9	60	123.2	60	1232
13	2357	13		13	2860	65	1385	13	1058.4	65	125.2	65	1252
14	2367	14		14	2870	70	1417	14	1063.0	70	127.1	70	1271
15	2377	15		15	2880	75	1450	15	1067.6	75	129.0	75	1290
16	2388	16		16	2890	80	1483	16	1072.2	80	130.9	80	1309
17	2398	17		17	2900	85	1516	17	1076.8	85	132.8	85	1328
18	2408	18		18	2910	90	1549	18	1081.4	90	134.7	90	1347
19	2418	19		19	2920	95	1584	19	1086.0	95	136.6	95	1366
20	2429	20	1922	20	2930	100	1618	20	1090.7	100	138.5	100	1385
21	2439	21		21	2940	110	1688	21	1095.3	110	142.3	110	1423
22	2449	22		22	2950	120	1760	22	1100.0	120	146.1	120	1461
23	2460	23		23	2960	130	1833	23	1104.6	130	149.8	130	1498
24	2470	24		24	2970	140	1909	24	1109.3	140	153.6	140	1536
25	2480	25	2000	25	2980	150	1987	25	1114.0	150	157.3	150	1573
26	2491	26		26	2990	160	2066	26	1120.0	160	161.0	160	1611
27	2501	27		27	3000	170	2148	27	1123.4	170	164.8	170	1648
28	2512	28		28	3010	**180**	2232	28	1128.1	180	168.5	180	1685
29	2522	29		29	3020			29	1132.9	190	172.2	190	1722
30	2532	30	2080	30	3030			30	1137.6	200	175.8	200	1758
35	2585	35		35	3080			35	1161.5	210	179.5	210	1795
40	2638	40	2245	40	3130			40	1185.7	220	183.2	220	1832
45	2692	45		45	3180			45	1210.2	230	186.8	230	1868
50	2745	50	2417	50	3230			50	1235.0	240	190.5	240	1905
55	2800	55		55	3280			55	1260.1	250	194.1	250	1941
60	2855	60	2597	60	3330			60	1285.4	260	197.7	260	1977
65	2910	65		65	3380			65	1311.1	270	201.3	270	2013
70	2966	70	2785	70	3430			70	1337.1	280	204.9	280	2049
75	3022	75		75	3480			75	1363.5	290	208.5	290	2085
80	3079	80	2980	80	3530			80	1390.1	300	212.0	300	2121
85	3136	85		85	3580			85	1417.1	310	215.6	310	2156
90	3194	90	3182	90	3630			90	1444.4	320	219.1	320	2191
95	3252	95		95	3680			95	1472.0	330	222.7	330	2227
100	3311	100	3392	100	3730			100	1500.0	340	226.2	340	2262
105	3370	105		105	3780			105	1528.3	350	229.7	350	2297
110	3430	110	3607	110	3830			110	1557.0	360	233.2	360	2332
115	3491	115		115	3880			115	1586.0	370	236.7	370	2367
120	3552	120	3817	120	3930			**120**	1625.4	380	240.1	380	2401
125	3613	125	3915	125	3980					390	243.6	390	2436
130	3675	130	4008	130	–					**400**	247.0	**400**	2470
140	3802	140	4166	140	–								
150	3929	**150**	4280	**150**	–								

Sensor type (+)
Thermistor elements with positive temperature coefficient –
Temperature ranges (temperature/resistance)

Accuracy of passivee elements			
Sensor elements	Tolerance	Standard	Rated zero-power resistance
Pt 1000	± 0.3 K / 0 °C	DIN EN 60 751, class B	TK = 3850 ppm / K
Pt 1000 1/3 DIN	± 0.1 K / 0 °C	DIN EN 60 751, class A	TK = 3850 ppm / K
Pt 1000 A	± 0.15 K / 0 °C	DIN EN 60 751, class A, TGA	TK = 3850 ppm / K
Pt 1000 1/10 DIN	± 0.03 K / 0 °C	DIN EN 60 751, class A	TK = 3850 ppm / K
Pt 100	± 0.3 K / 0 °C	DIN EN 60 751, class B	TK = 3850 ppm / K
Pt 100 1/3 DIN	± 0.1 K / 0 °C	DIN EN 60 751, class A	TK = 3850 ppm / K
Ni 1000	± 0.4 K / 0 °C	DIN EN 43 760, class B	TCR = 6180 ppm / K
Ni 1000 1/2 DIN	± 0.2 K / 0 °C	DIN EN 43 760, class B	TCR = 6180 ppm / K
Ni 1000 TK5000	± 0.4 K / 0 °C		TCR = 5000 ppm / K
LM235Z, KP10	± 0.2 K / 25 °C	10 mV / K	
NTC 1.8K	± 0.3 K / 25 °C	B25 / 85 = 3499 K	R25 = 1.8 K ± 0.3 %
NTC 2.2K	± 0.3 K / 25 °C	B25 / 85 = 3610 K	R25 = 2.2 K ± 1 %
NTC 10K	± 0.3 K / 25 °C	B25 / 85 = 3977 K	R25 = 10 KOhm ± 1 %
NTC 10K Precon	± 0.3 K / 25 °C	B25 / 85 = 3695 K	R25 = 10 KOhm ± 1 %
NTC 10K Carell	± 0.3 K / 25 °C	B25 / 85 = 3435 K	R25 = 10 KOhm ± 1 %
NTC 20K	± 0.2 K / 25 °C	B25 / 85 = 4262 K	R25 = 20 KOhm ± 0.5 %

ATTENTION, NOTE !

Due to self-heating, the testing current has an influence on the measuring accuracy of the thermometer and should therefore never exceed the following:

Guide values for the testing current:

Maximum sensor current ..... I_{max}
Pt1000 (thin layer) ..... < 0.6 mA
Pt100 (thin layer) ..... < 1.0 mA
Ni1000 (DIN), Ni1000 TK5000 ..... < 0.3 mA
NTC xx ..... < 2.0 mW
LM235Z ..... 400 µA ... 5 mA
KTY 81 - 210 ..... < 2.0 mA

To avoid damage/errors, it is recommended to use shielded cables. It is imperative to avoid parallel laying of current-carrying lines. The EMC directives must be observed!

These devices must be installed by an authorised qualified expert!

Sensor type (–)
Thermistor elements with negative temperature coefficient –
Temperature ranges (temperature/resistance)

S+S REGELTECHNIK

NTC 1,8 kΩ R_{25} = 1.8 kΩ ±0,2K $B_{25/85}$ = 3499 K ±1%		NTC 2,2 kΩ R_{25} = 2.2 kΩ ±1% $B_{25/85}$ = 3610 K ±1%		NTC 3 kΩ R_{25} = 3 kΩ ±1% $B_{25/85}$ = 3977 K ±1%		NTC 5 kΩ R_{25} = 5 kΩ ±1% $B_{25/85}$ = 3977 K ±1%		NTC 10 kΩ R_{25} = 10 kΩ ±1% $B_{25/85}$ = 3977 K ±1%		NTC 10 kΩ Precon R_{25} = 10 kΩ ±1% $B_{25/85}$ = 3695 K ±1%		NTC 10 K e.g. Carell R_{25} = 10 kΩ ±1% $B_{25/85}$ = 3435 K ±1%	
°C	Ω	°C	Ω	°C	Ω	°C	Ω	°C	Ω	°C	Ω	°C	Ω
– 50	–	– 50	–	– 50	–	**– 50**	–	– 50	–	**– 50**	–	**– 50**	–
– 40	39073	– 40	–	– 40	–	– 40	–	– 40	–	– 40	–	– 40	–
– 30	22301	**– 30**	27886	**– 30**	53093	– 30	88488	– 30	175785	– 30	135200	– 30	111300
– 20	13196	– 20	16502	– 20	29125	– 20	48541	– 20	96597	– 20	78910	– 20	67770
– 15	10278	– 15	12844	– 15	21887	– 15	36479	– 15	72650	– 15	61020	– 15	53410
– 10	8069	– 10	10070	– 10	16599	– 10	27664	– 10	55142	– 10	47540	– 10	42470
– 5	6383	– 5	8134	– 5	12698	– 5	21163	– 5	42215	– 5	37310	– 5	33900
0	5085	0	6452	0	9795	0	16325	0	32590	0	29490	0	27280
1	4863	1	6164	1	9309	1	15515	1	30974	1	28156	1	26130
2	4652	2	5891	2	8849	2	14749	2	29448	2	26890	2	25030
3	4452	3	5631	3	8415	3	14025	3	28007	3	25687	3	23990
4	4261	4	5384	4	8005	4	13341	4	26645	4	24545	4	23000
5	4079	5	5150	5	7617	5	12695	5	25357	5	23460	5	22050
6	3906	6	4927	6	7251	6	12085	6	24138	6	22430	6	21150
7	3742	7	4715	7	6905	7	11508	7	22984	7	21451	7	20300
8	3585	8	4513	8	6575	8	10959	8	21892	8	20519	8	19480
9	3436	9	4321	9	6265	9	10442	9	20858	9	19633	9	18700
10	3294	10	4138	10	5971	10	9951	10	19880	10	18790	10	17960
11	3159	11	3964	11	5691	11	9485	11	18953	11	17987	11	17240
12	3030	12	3797	12	5427	12	9045	12	18074	12	17222	12	16560
13	2906	13	3639	13	5177	13	8628	13	17242	13	16494	13	15900
14	2789	14	3488	14	4938	14	8230	14	16452	14	15801	14	15280
15	2677	15	3345	15	4713	15	7855	15	15704	15	15140	15	14690
16	2570	16	3207	16	4500	16	7500	16	14992	16	14510	16	14120
17	2468	17	3076	17	4298	17	7163	17	14317	17	13910	17	13580
18	2371	18	2952	18	4104	18	6841	18	13676	18	13337	18	13060
19	2278	19	2832	19	3922	19	6536	19	13068	19	12791	19	12560
20	2189	20	2719	20	3747	20	6246	20	12491	20	12270	20	12090
21	2104	21	2610	21	3582	21	5970	21	11941	21	11773	21	11630
22	2023	22	2506	22	3426	22	5710	22	11418	22	11298	22	11200
23	1945	23	2407	23	3277	23	5462	23	10921	23	10845	23	10780
24	1871	24	2289	24	3135	24	5224	24	10450	24	10413	24	10380
25	1800	25	2200	25	3000	25	5000	25	10000	25	10000	25	10000
26	1732	26	2115	26	2872	26	4787	26	9572	26	9606	26	9632
27	1667	27	2034	27	2750	27	4583	27	9166	27	9229	27	9281
28	1605	28	1957	28	2634	28	4389	28	8778	28	8869	28	8944
29	1546	29	1883	29	2522	29	4203	29	8409	29	8525	29	8622
30	1489	30	1812	30	2417	30	4028	30	8058	30	8196	30	8313
35	1238	35	1500	35	1960	35	3266	35	6534	35	6754	35	6940
40	1034	40	1248	40	1597	40	2662	40	5329	40	5594	40	5827
45	869	45	1043	45	1310	45	2184	45	4371	45	4655	45	4911
50	733	50	876	50	1081	50	1801	50	3605	50	3893	50	4160
55	622	55	738	55	896	55	1493	55	2988	55	3270	55	3536
60	529	60	626	60	746	60	1244	60	2489	60	2760	60	3020
65	453	65	532	65	625	65	1042	65	2084	65	2338	65	2588
70	389	70	454	70	526	70	876	70	1753	70	1900	70	2228
75	335	75	390	75	444	75	740	75	1480	75	1700	75	1924
80	290	80	335	80	346	80	627	80	1256	80	1457	80	1668
85	252	85	289	85	321	85	535	85	1070	85	1254	85	1451
90	220	90	251	90	275	90	458	90	915	90	1084	90	1266
95	192	95	218	95	236	95	393	95	786	95	939	95	1108
100	169	100	190	100	204	100	339	100	678	100	817	100	973
105	148	105	167	105	176	105	294	105	586	105	713	105	857
110	131	**110**	146	110	138	110	255	110	509	110	624	110	758
115	116			115	120	115	223	115	445	115	548	115	671
120	103			120	105	120	195	120	389	120	482	120	597
125	92			125	92	125	171	125	341	125	426	125	531
				130	81	130	151	130	300	130	377	130	474
				140	64	140	118	140	234	140	298	140	381
				150	50	**150**	93	**150**	185	**150**	238	**150**	308

Sensor type (–)
Thermistor elements with negative temperature coefficient – Temperature ranges (temperature/resistance)

NTC 20 kΩ R_{25} = 20 kΩ ±0.5% $B_{25/85}$ = 4262 K ±1%		NTC 50 kΩ R_{25} = 50 kΩ ±1% $B_{25/85}$ = 4262 K ±1%		Satchwell SAT 1	
°C	Ω	°C	Ω	°C	Ω
– 50	–	– 50	–	**– 50**	9719
– 40	806800	**– 40**	2017000	– 40	9584
– 30	413400	– 30	1033500	– 30	9349
– 20	220600	– 20	551500	– 20	8968
– 15	163480	– 15	408700	– 15	8708
– 10	122260	– 10	305650	– 10	8396
– 5	92220	– 5	230550	– 5	8031
0	70140	0	175350	0	7614
1	66469	1	166173	1	7525
2	63011	2	157527	2	7434
3	59751	3	149378	3	7341
4	56678	4	141696	4	7246
5	53780	5	134450	5	7150
6	51041	6	127602	6	7053
7	48457	7	121142	7	6954
8	46018	8	115044	8	6853
9	43715	9	109287	9	6752
10	41540	10	103850	10	6649
11	39489	11	98723	11	6545
12	37550	12	93875	12	6440
13	35716	13	89291	13	6334
14	33982	14	84954	14	6228
15	32340	15	80850	15	6121
16	30782	16	76954	16	6013
17	29307	17	73269	17	5905
18	27912	18	69780	18	5786
19	26591	19	66478	19	5684
20	25340	20	63350	20	5580
21	24156	21	60389	21	5471
22	23033	22	57582	22	5362
23	21968	23	54921	23	5254
24	20958	24	52396	24	5147
25	20000	25	50000	25	5039
26	19090	26	47726	26	4933
27	18227	27	45566	27	4827
28	17406	28	43515	28	4721
29	16627	29	41567	29	4617
30	15886	30	39715	30	4513
35	12698	35	31745	35	4012
40	10212	40	25530	40	3545
45	8260	45	20650	45	3117
50	6718	50	16795	50	2730
55	5494	55	13735	55	2386
60	4518	60	11295	60	2082
65	3732	65	9330	65	1816
70	3098	70	7745	70	1585
75	2586	75	6465	75	1385
80	2166	80	5415	80	1213
85	1823	85	4558	85	1064
90	1541	90	3852	90	937
95	1308	95	3269	95	828
100	1114	100	2785	100	734
105	953	105	2382	105	654
110	818	110	2045	110	585
115	704	115	1761	115	525
120	609	120	1523	120	474
125	528	125	1321	125	429
130	460	130	1149	130	391
140	351	140	878	140	329
150	272	**150**	679	**150**	281

Sensor type (–)

Resistor element with
negative temperature coefficient,

also called negative temperature coefficient thermistor, or NTC thermistor.

To avoid damage/errors, it is recommended to use shielded cables. It is imperative to avoid parallel laying of current-carrying lines. The EMC directives must be observed!

These devices must be installed by an authorised qualified expert!

Characteristics and wiring of terminal connections of some passivee temperature sensors

Characteristics **Pt**

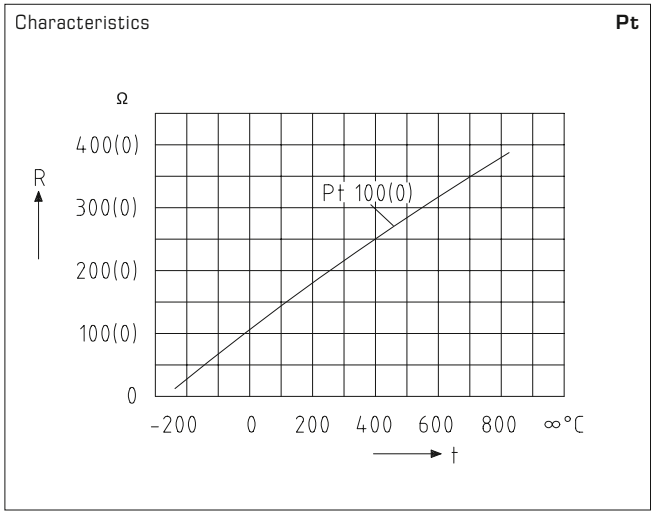

Characteristics **Ni**

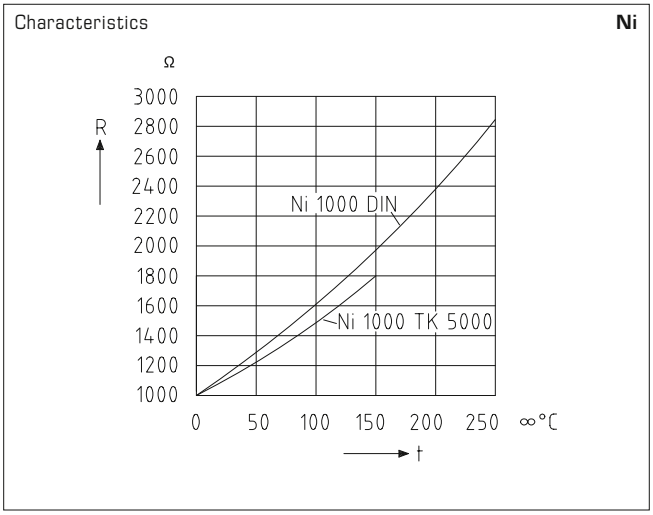

Wiring of terminal connections room devices and box head

Connecting diagram — **1 x two-wire connection standard**

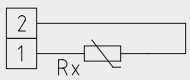

Connecting diagram — **1 x two-wire connection LM 235 Z (KP 10)**

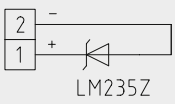

Connecting diagram — **1 x four-wire connection** (optional)

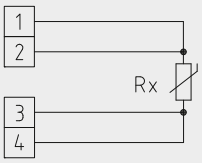

Wiring of terminal connections head form B

Connecting diagram — **1 x two-wire connection**

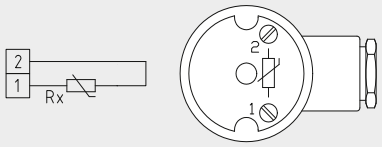

Connecting diagram — **1 x three-wire connection**

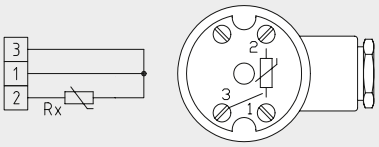

Connecting diagram — **1 x four-wire connection**

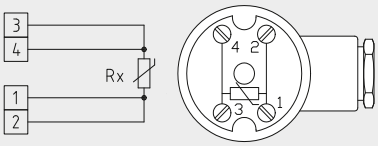

Connecting diagram — **2 x two-wire connection**

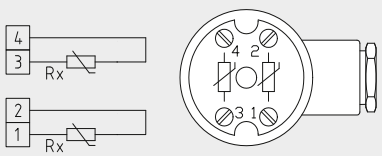

Connecting diagram — **2 x three-wire connection**

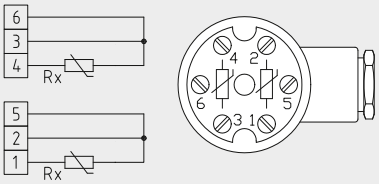

Measuring transducers, calibratable, with active output for THERMASGARD® temperature sensors

TEMPERATURE RANGES:

When selecting measuring transducer ranges, it is necessary to ensure that the maximum temperatures permissible for the sensor/enclosure are not exceeded!

Ambient temperature for measuring transducers: –30...+70 °C

Load resistance diagram
4...20 mA

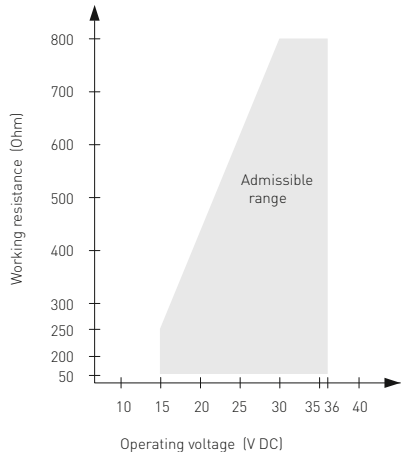

Dependency of output voltage on output current

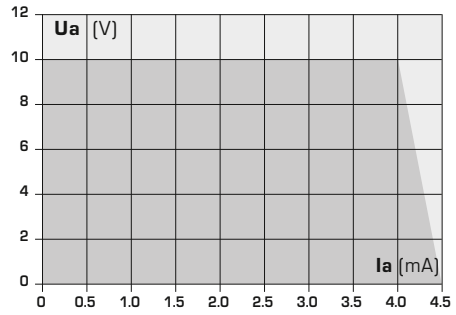

SUPPLY VOLTAGE:

For operating voltage reverse polarity protection, a one-way rectifier or reverse polarity protection diode is integrated in this device variant. This internal one-way rectifier also allows operating 0 - 10 V devices on AC supply voltage.

The output signal is to be tapped by a measuring instrument. Output voltage is measured here against zero potential (0 V) of the input voltage!

When this device is operated on DC supply voltage, the operating voltage input UB+ is to be used for 15...36 V DC supply and UB– or GND for ground wire!

When several devices are supplied by one 24 V AC voltage supply, it is to be ensured that all "positive" operating voltage input terminals (+) of the field devices are connected with each other and all "negative" operating voltage input terminals (–) = reference potential are connected together (in-phase connection of field devices).
All outputs of field devices must be referenced to the same potential!

In the event of a reversed polarity at one field device, that device would cause a supply voltage short-circuit. The resulting short-circuit current flowing through this field device may cause damage to it.

Therefore, ensure correct wiring!

Schematic diagram **Individual operation**

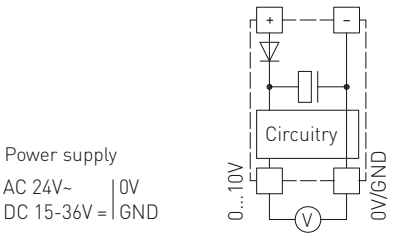

Schematic diagram **Parallel operation**

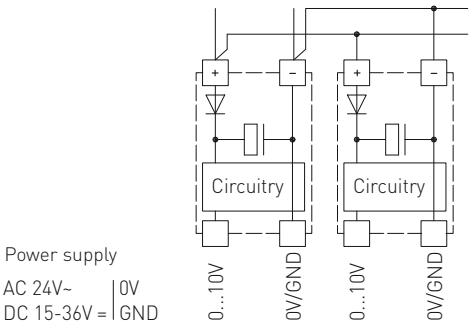

S+S REGELTECHNIK

Further information and legal notice

NOTE

All devices supplied display the company logo of S+S Regeltechnik GmbH as standard!
Neutral versions without the logo printed are available on request!

ORDER PLACEMENT

Orders can be placed in writing, by phone, by fax, or by e-mail. In doing so, the requested items shall be identified by denomination and quantities ordered and also the requested delivery date shall be stated. Special orders must generally be placed in writing, precisely specifying all requested special features. Or order directly ONLINE at **www.SplusS.de!**

DELIVERY PERIODS

The catalogue items are available from stock in partial quantities – subject to prior sale.
Delivery dates for large and special orders are determined after receipt of order / release order and mutual agreement.
We reserve the right to make partial deliveries. Events of force majeure such as difficulties in procurement of materials, strikes, etc. entitle us to withdraw from the contract.

TRADEMARK PROTECTION RIGHTS

S+S Regeltechnik GmbH, S+S logo and S+S brand names are trademarks registered in the register at the German Patent and Trademark Office and must not be used in other publications without the trademark owner's prior written consent.
All other product and company names mentioned here are brands or trademarks of the respective proprietors.

INFRINGEMENT OF INDUSTRIAL PROPERTY RIGHTS

Registered trademarks, trade names and general descriptive names are used in this product catalogue.
Even if these are not expressly marked as such, the pertinent protection provisions and copyrights shall nevertheless apply.

ATTENTION!

We generally only supply commercial, retail and industrial customers. We do not sell to the general public!

Our General Terms and Conditions of Sale and Delivery are applicable in all cases!
This price list supersedes all previous price lists.

LEGAL NOTICE

© Copyright by S+S Regeltechnik GmbH

Reprints, even excerpts, are only permitted with the approval of S+S Regeltechnik GmbH.
All information provided without prejudice, technical modifications and price changes reserved.

Editor: S+S Regeltechnik GmbH, Mr. Tino Schulze, Managing Director
Graphic design: straub design

PHOTO CREDITS

REFERENCES:
iStock-157512295 © iStock.com/„Bertlmann“
iStock-183042951 © iStock.com/„TommL“
iStock-503865996 © iStock.com/„Lisa-Blue“
shutterstock_19478008 © „K-i-T“/Shutterstock.com
shutterstock_688127869 © „Joann Pate“/Shutterstock.com

SOLUTIONS (graphic building):
Fotolia_136855914_V © “Flat 3d isometric airport terminal infographics vector.“@„Sentavio“ – Fotolia.com

APPENDIX:
iStock-480586617 © iStock.com/„xavierarnau“

BEGINNING OF CHAPTERS:
iStock-482550126 © iStock.com/„vm“ (Modbus)
iStock-510487654 © iStock.com/„shironosov“ (Humidity)
iStock-510676770 © iStock.com/„mediaphotos“ (Light intensity)
iStock-637081054 © iStock.com/„alvarez“ (Air quality)
iStock-468377000 © iStock.com/„TommL“ (Radio sensors)
shutterstock_121578847 © „SnvvSnvvSnvv“/Shutterstock.com (Temperature sensors passive)
shutterstock_412795528 © „Dmitry Kalinovsky“/Shutterstock.com (Temperature sensors active)
shutterstock_373407667 © „Jan Faukner“/Shutterstock.com (Temperature controllers)
shutterstock_423350014 © „goodluz“/Shutterstock.com (Accessories)
Fotolia_131639768 © “Portrait of a worker, constructing and checking development of a small business hall. Reliable civil engineer working on a construction site, foreman at work“@„urbans78“ – Fotolia.com (Pressure)

11/2018

S+S REGELTECHNIK

S+S Regeltechnik GmbH
General Terms and Conditions of Sale and Delivery

1. Scope

(1) Any and all quotations, performances and agreements are solely made on the basis oft these S+S Regeltechnik GmbH (S+S) General Terms and Conditions of Sale and Delivery in their respective effective version. These General Terms and Conditions of Sale and Delivery are effective towards entrepreneurs in terms of BGB (German Civil Code) only.

(2) Customers' terms and conditions conflicting with or deviating from these General Terms and Conditions of Sale and Delivery will be acknowledged by S+S only, if S+S has expressly consented to the validity of such terms in writing. These S+S General Terms and Conditions of Sale and Delivery shall also be effective when services have been provided in knowledge of conflicting or deviating customers' terms and conditions to such customer without reservation.

(3) These S+S General Terms and Conditions of Sale and Delivery are being acknowledged through the customer's order placement or acceptance of services provided for the term of the entire business connection, also if they are not expressly repeated.

2. Quotation/contract conclusion/termination of contract

(1) All quotations made by S+S are without engagement. A contract is concluded through the written order confirmation or the delivery of goods ordered as far as S+S does not indicate via other circumstances that the order has been accepted.
As far as the customer communicates change requests after receipt of the order confirmation, S+S is entitled to charge the additional costs resulting thereof in case of accepting such changes.

(2) Illustrations, drawings and other specifications are only committal upon written acknowledgement. The corresponding applies for advisory or informative conversations between S+S and the customer, in particular about the applicability of goods ordered.

(3) As far as the customer cancels the contract regardless for whatever reason without S+S being accountable for, S+S is entitled to the right to claim blanket damages in the amount of 10 % of the total price being agreed at the date of order cancellation unless S+S or the customer provides other evidences in the individual case.

3. Performances/dates

(1) Delivery terms are binding only (fixed date transaction), if S+S has expressly confirmed that in writing.

(2) The adherence to binding terms of delivery presupposes the clarification of all technical and other questions as well as the timely and proper performance of any of the customer's duties.

(3) Delays in delivery for reasons beyond the sphere of influence of S+S, particularly because of unforeseeable occurrences preventing or impeding a delivery in due time, S+S cannot be held responsible for. In such cases the delivery term extends accordingly. In the case of delay of performance the customer is entitled to withdraw from the non-performed part of the contract as far as such impediment to performance continues for more than 6 weeks and a reasonable grace period for delivery has been granted. Customer's claims for damages because of extension of a delivery period or in case of S+S being exempted from its duty to perform are excluded as far as the customer had been forthwith notified of such impediment to performance.

(4) As far as S+S is responsible for the non-compliance with binding delivery dates, S+S's liability is limited to 0.5 % of the order value for each full week of default, however up to a maximum of 5 % of the order value of the shipment concerned. Any further claims for damages the customer can only assert as far as the customer has granted S+S a reasonable grace period in writing and such delay in delivery is attributable to gross negligence or intent on part of S+S.

(5) S+S is exempt from its duty to supply when circumstances become known during the term of the contractual relationship that give reason to rightful doubts in the solvency of the customer. In that case S+S will perform the delivery as far as the customer makes an advance payment in respect of the purchase price, or provides appropriate securities.

(6) As far as a customer orders goods on call (in particular pre-order), the full acceptance of the purchase or the full release order respectively has to be made within 12 months from the date of contract conclusion or order respectively. Otherwise the customer is obligated to accept the goods within 10 working days as far as S+S requests to do so in writing.

(7) In case of noncompliance with the time limit mentioned under cipher (6), the legal consequences of default of acceptance in terms of BGB will commence.

(8) Generally no right to return goods not needed anymore by buyer or for the purpose of stock reduction does exist.

4. Delivery

(1) Shipment of goods is effected ex principal office of S+S at the customer's risk and expense (Incoterms 2010: EXW). Any transport, breakage, theft, or other insurance will be taken out by S+S only at customer's request. Any expenses resulting thereof will be charged to the customer's account.

(2) As far as a shipment is supposed to be carried out at a later date than the practically possible date of shipment upon the customer's request, S+S is entitled to charge the costs of storage to the customer's account, starting from one month after readiness for shipment at a blanket rate of 0.5 % of the order value for each month, subject to providing other evidences. One month after notification of readiness for shipment S+S is alternatively entitled to request the customer to accept the goods and in case of non-acceptance, to dispose of the goods in any other way. Then the customer is to be supplied within a reasonably extended period of time.

(3) Partial performances are permissible as far as that is not unreasonable to the customer.

5. Prices/terms of payment

(1) Prices by S+S are understood plus legal value added tax at the respective rate in effect, ex principal office of S+S plus transport/shipping and packing costs to be separately charged. For orders of less than 75.00 EUR in value we reserve the right to charge a small quantity surcharge in the amount of 8.50 EUR. For special custom-made items we charge 67.00 EUR setup costs.
Existing customers from which the last payment was received more than 12 months ago as well as new customers are supplied two times against prepayment and then after a positive creditworthiness check by our Euler Hermes trade credit default insurance on basis of payment on account. Foreign customers are supplied against prepayment.

(2) S+S is entitled to invoice partial billing in accordance with the progress of order processing.

(3) The invoice amount is due for payment upon receipt of the invoice. As far as payment is not effected within 14 working days form the date of performance in form of goods and receipt of the invoice, the customer is in default. All payments must be made in EUR. With the reservation of providing evidence of further damages in case of default of payment the customer has to pay interest on arrears at a rate of 8 percentage points above the respective base rate.

(4) Bills of exchange and checks are only accepted for processing and take fulfilling effect only after being unconditionally credited. Eventual ancillary costs arising due to payment by bill of exchange or check are for the customer's account.

6. Warranty

(1) The customer is obligated to inspect the goods immediately after the delivery by S+S as far as that is feasible according to the proper course of business and to forthwith notify S+S of any defects. In case the customer fails to provide such notification, the goods are deemed approved unless a defect is concerned that was not recognizable in the course of inspection. If such a defect appears at a later date, notification must be made immediately after discovery; otherwise the goods are deemed approved also in view of such defect. To maintain the customer's rights the timely dispatch of the notification is sufficient. If S+S has maliciously concealed a defect, then S+S cannot refer to that clause.

(2) If the suitability or functionality of the goods can only be checked and ascertained in the course of further processing, the customer is obliged to carry out a test processing run. If no notification of defects is made after this test run, the goods shall also be deemed approved.

(3) Within the scope of supplementary performance S+S has a right of choice. When the first-time attempt to eliminate the defect remains unsuccessful, S+S reserves the right to deliver goods free of defects. In case the supplementary performance has failed, the customer is optionally entitled to the right of withdrawal, or to the right of curtailment.

(4) Excluded from any warranty are: faults caused by inapplicable or improper application and utilization, faulty mounting & installation or putting into operation, particularly in the case of non-observance of operating instructions, or because of incorrect or negligent treatment by the customer or any third-party person not being within the sphere of responsibility of S+S.

(5) S+S assigns its warranty claims existing against the manufacturer to the customer. The customer accepts such assignment. The customer is only entitled to assertion of warranty claims against S+S as far as the seriously pursued extra-judicial assertion of claims against the manufacturer has remained unsuccessful. In that case the customer is obligated to assign those claims against the manufacturer back to S+S again.

(6) Warranty claims prescribe within one year from the date of delivery of goods through S+S.

(7) If the customer calls upon S+S because of warranty claims and it turns out that either no defect was existing, or the asserted defect is due to a circumstance that does not commit S+S to warranty, then the customer has to reimburse S+S for the expenses resulting thereof as far as the customer has caused such availment of S+S grossly negligent or with intent.

(8) Eventual supplementary performances or subsequent improvements made by S+S always happen without acknowledgement of any statutory duty and on goodwill basis.

(9) In case the customer withdraws from the sales contract or rightfully requests delivery of new goods free of defects, or compensation for damages instead of the full performance, then S+S is obligated to dismount such defective goods delivered at its own expense as far as the customer had already installed such goods and to remove them. The customer itself is allowed to dismount defective goods upon request. In that case S+S refunds the customer for the costs arising in the course of doing so, however only as far as such are the customer's primary costs not including any share of profit. As far as the customer commissions a third party contractor with demounting, expenses resulting thereof will only be reimbursed by S+S if the buyer had granted S+S reasonable respite before without success. This does not apply when additional respite is legally superfluous according to statutory regulation.

(10) In the event of justified complaints, the corresponding returned goods will only be accepted if an RMA number has been issued for them. This must be requested from S+S and should always be quoted on the documents accompanying the returned goods.

7. Liability

(1) S+S is liable for damages due to wilfully and gross negligently caused violation of duties. S+S is furthermore liable for damages resulting from slightly negligently caused violation of material contractual obligations. Material contractual obligations in terms of this are duties where the performance of which enables the proper performance of the contract in the first place, and in the observance of which the customer regularly trusts and may rely upon. Any liability of S+S for slight negligence apart from that is excluded. The same applies to wilful or grossly negligent violation of duties and the slightly negligent violation of material contractual obligations through a legal representative or vicarious agent of S+S. Liability for personal injury remains unaffected by the aforesaid limitation of liability.

(2) In case of slightly negligent violation of material contractual obligations, liability of S+S is limited in the amount to the contract-typical damage. Contract-typical in terms of this is a damage, when in the normal course of affairs its occurrence in consequence of the committed violation of duty was to be assumed.

(3) S+S can only be held liable for deliberate breach of duty and not for any consequential damage caused by processing unsuitable or defective goods.

8. Retention of title

(1) Goods delivered remain the property of S+S up to the complete settlement of any and all claims by the customer. As far as the customer alienates goods under reserve without receiving the purchase price from its buyer matching payment with physical delivery or in advance, the customer also has to agree with such buyers reservation of title in accordance with this regulation.

(2) The customer is not entitled to pledge goods under reserve or to assign such goods for security. In cases of garnishment or other third parties' interventions the customer must notify S+S forthwith in writing.

(3) The customer is entitled to resell goods under reserve in the course of its regular business operations. The customer already now assigns to S+S all receivables in the amount of the total invoice amount (including VAT) of the claim that are accruing to the customer against its buyers in consequence of the resale, in fact irrespective of whether such goods are alienated without or after processing. The customer also remains entitled to collect the receivable even after assignment, whereas the entitlement of S+S to collect the outstanding amount itself remains thereof unaffected. S+S however undertakes towards the customer not to collect the outstanding amount as long as the customer does not fall behind with payments, or an application for institution of composition or insolvency proceedings has not been filed. If that is the case, the customer upon request by S+S is committed to disclose those assigned receivables and their debtors, to provide the necessary records, and to notify the debtors of the assignment.

9. Operating, mounting & installation instructions

The customer undertakes to adhere to operating, mounting & installation instructions being delivered together with goods where appropriate, and also to make possible third-party buyers aware of the same. The complete or partial non-observance of such instructions may cause a complete loss of buyers' rights. This does no apply to possible claims for damages according to § 7.

10. Copyright

The customer is not entitled to reproduce or copy any contents of S+S catalogues, in particular technical drawings and photographs, for its own advertising or other purposes without the express written approval by S+S. The customer is not allowed to make quotations or other entrepreneurial documents available to third parties.

11. Miscellaneous

(1) For any disputes arising from or in connection with the contractual relationship, Nuremberg/Germany is agreed as place of jurisdiction. Place of performance is Nuremberg/Germany.

(2) The customer can only offset against with claims that are undisputed or have been established as final and absolute. The customer is entitled to a right of retention only if its counterclaims originate from the very same contractual relationship, or such claims are undisputed or have been established as final and absolute.

(3) Modifications of and amendments to the contract require the written form. That also applies to the alteration of this written-form requirement clause.

(4) In case one or several provisions of these General Terms and Conditions of Sale and Delivery should be ineffective or have not been properly incorporated into the contract, the rest of the provisions of these General Terms and Conditions of Sale and Delivery remain effective.

(5) Solely the laws of the Federal Republic of Germany are applicable while excluding the law regarding the United Nations Convention on Contracts for the International Sale of Goods (CISG) – also when the customer has its registered office abroad.

These General Terms and Conditions of Sale and Delivery are protected by copyright.
Infringements of copyright will be legally prosecuted.

Issued on: October 2018

BASIC

S+S REGELTECHNIK

Range of preferential items permanently available from stock
in standard design with S+S company logo

THERMASGARD® TF 43

Temperature sensors with passive output,
basic device

Type / WG03B	Output	Item No.
TF 43 PT 1000 xx	**passive**	**IP43**
TF43 PT1000 50MM		1101-7010-5011-000
TF43 PT1000 100MM		1101-7010-5021-000
TF43 PT1000 150MM		1101-7010-5031-000
TF43 PT1000 200MM		1101-7010-5041-000
TF43 PT1000 300MM		1101-7010-5061-000
TF 43 Ni1000 xx	**passive**	**IP43**
TF43 NI1000 50MM		1101-7010-9011-000
TF43 NI1000 100MM		1101-7010-9021-000
TF43 NI1000 150MM		1101-7010-9031-000
TF43 NI1000 200MM		1101-7010-9041-000
TF43 NI1000 300MM		1101-7010-9061-000
TF 43 Ni1000TK xx	**passive**	**IP43**
TF43 NITK 50MM		1101-7011-0011-000
TF43 NITK 100MM		1101-7011-0021-000
TF43 NITK 150MM		1101-7011-0031-000
TF43 NITK 200MM		1101-7011-0041-000
TF43 NITK 300MM		1101-7011-0061-000
TF 43 LM235Z xx	**passive**	**IP43**
TF43 LM235Z 50MM		1101-7012-1011-000
TF43 LM235Z 100MM		1101-7012-1021-000
TF43 LM235Z 150MM		1101-7012-1031-000
TF43 LM235Z 200MM		1101-7012-1041-000
TF43 LM235Z 300MM		1101-7012-1061-000
TF 43 NTC 1,8 K xx	**passive**	**IP43**
TF43 NTC1,8K 50MM		1101-7011-2011-000
TF43 NTC1,8K 100MM		1101-7011-2021-000
TF43 NTC1,8K 150MM		1101-7011-2031-000
TF43 NTC1,8K 200MM		1101-7011-2041-000
TF43 NTC1,8K 300MM		1101-7011-2061-000
TF 43 NTC10K xx	**passive**	**IP43**
TF43 NTC10K 50MM		1101-7011-5011-000
TF43 NTC10K 100MM		1101-7011-5021-000
TF43 NTC10K 150MM		1101-7011-5031-000
TF43 NTC10K 200MM		1101-7011-5041-000
TF43 NTC10K 300MM		1101-7011-5061-000
TF 43 NTC20K xx	**passive**	**IP43**
TF43 NTC20K 50MM		1101-7011-6011-000
TF43 NTC20K 100MM		1101-7011-6021-000
TF43 NTC20K 150MM		1101-7011-6031-000
TF43 NTC20K 200MM		1101-7011-6041-000
TF43 NTC20K 300MM		1101-7011-6061-000







THERMASGARD® TM 43

Temperature measuring transducer,
calibratable, with multi-range switching, basic device



Basic device
(without accessories)

Type / WG01B	Output	Item No.
TM43-U xx	**active**	**IP43**
TM43-U 50MM	0 -10 V	1101-7111-0019-900
TM43-U 100MM	0 -10 V	1101-7111-0029-900
TM43-U 150MM	0 -10 V	1101-7111-0039-900
TM43-U 200MM	0 -10 V	1101-7111-0049-900
TM43-U 300MM	0 -10 V	1101-7111-0069-900
TM43-I xx	**active**	**IP43**
TM43-I 50MM	4...20 mA	1101-7112-0019-900
TM43-I 100MM	4...20 mA	1101-7112-0029-900
TM43-I 150MM	4...20 mA	1101-7112-0039-900
TM43-I 200MM	4...20 mA	1101-7112-0049-900
TM43-I 300MM	4...20 mA	1101-7112-0069-900



Immersion / screw-in
temperature sensor
with immersion sleeve
(accessories)



Duct temperature sensor
with mounting flange
(accessories)

Accessories
for basic device
TF43 / TM43



Type / WG01B	Item No.
Immersion sleeves	
TH08-ms / xx (T_{max} +150 °C)	without neck tube
TH08-MS 50MM	7100-0011-0010-132
TH08-MS 100MM	7100-0011-0020-132
TH08-MS 150MM	7100-0011-0030-132
TH08-MS 200MM	7100-0011-0040-132
TH08-MS 300MM	7100-0011-0060-132
TH08-VA / xx (T_{max} +600 °C)	Stainless steel, V4A (1.4571)
TH08-VA 50MM	7100-0012-0010-132
TH08-VA 100MM	7100-0012-0020-132
TH08-VA 150MM	7100-0012-0030-132
TH08-VA 200MM	7100-0012-0040-132
TH08-VA 300MM	7100-0012-0060-132
Mounting flanges	Plastic
MF-15-K Ø 15.2 mm (T_{max} +100 °C)	7100-0032-0000-000

BASIC

S+S REGELTECHNIK

Range of preferential items permanently available from stock
in standard design with S+S company logo

THERMASGARD® ATF 01

Outside temperature sensors / wet room temperature sensors

Type / WG03B	Output	Item No.
ATF 01 xx	**passive**	**IP 43**
ATF01 PT1000		1101-1030-5001-000
ATF01 NI1000		1101-1030-9001-000
ATF01 NITK		1101-1031-0001-000
ATF01 LM235Z		1101-1032-1001-000
ATF01 NTC1,8K		1101-1031-2001-000
ATF01 NTC10K		1101-1031-5001-000
ATF01 NTC20K		1101-1031-6001-000



THERMASGARD® ATM2-SD

Outside temperature / wet room temperature measuring transducers
calibratable, with multi-range switching

Type / WG01B	Output	Item No.
ATM 2-SD	**active**	**IP 43**
ATM2-SD-U	0 -10 V	1101-1191-0009-900
ATM2-SD-I	4...20 mA	1101-1192-0009-900

THERMASGARD® ALTF 02

Surface contact temperature sensors / tube contact temperature sensors, **compact variant**

Type / WG03B	Output	Item No.
ALTF 02 xx	**passive**	**IP 43**
ALTF02 PT1000		1101-1010-5001-000
ALTF02 NI1000		1101-1010-9001-000
ALTF02 NITK		1101-1011-0001-000
ALTF02 LM235Z		1101-1012-1001-000
ALTF02 NTC1,8K		1101-1011-2001-000
ALTF02 NTC10K		1101-1011-5001-000
ALTF02 NTC20K		1101-1011-6001-000

THERMASGARD® ALTM1-SD

Surface contact / tube contact temperature measuring transducers,
compact variant, calibratable, with multi-range switching

Type / WG01B	Output	Item No.
ALTM1-SD	**active**	**IP 43**
ALTM1-SD-U	0 -10 V	1101-6141-0219-920
ALTM1-SD-I	4...20 mA	1101-6142-0219-920

THERMASGARD® ALTF1

Surface contact temperature sensors / tube contact temperature sensors, **with detached sensor head**, (NL = 50 mm, cable material: PVC, cable length: 1.5 m, without enclosure)

Type / WG03B	Output	Item No.
ALTF 1 xx	**passive**	**IP 43**
ALTF1 PT1000		1101-6020-5211-110
ALTF1 NI1000		1101-6020-9211-110
ALTF1 NITK		1101-6021-0211-110
ALTF1 LM235Z		1101-6022-1211-110
ALTF1 NTC1,8K		1101-6021-2211-110
ALTF1 NTC10K		1101-6021-5211-110
ALTF1 NTC20K		1101-6021-6211-110



THERMASGARD® ALTM2-SD

Surface contact / tube contact temperature measuring transducers, **with detached sensor head**, calibratable, with multi-range switching
(NL = 50 mm, cable material: PVC, cable length: 1.5 m, with enclosure)

Type / WG01B	Output	Item No.
ALTM2-SD	**active**	**IP 43**
ALTM2-SD-U	0 -10 V	1101-6151-0219-920
ALTM2-SD-I	4...20 mA	1101-6152-0219-920



THERMASGARD® HTF 50

Sleeve temperature sensors / cable temperature sensors
(NL = 50 mm, cable material: PVC, cable length: 1.5 m, without enclosure)

Type / WG03B	Output	Item No.
HTF 50 xx	**passive**	**IP65**
HTF50 PT1000		1101-6030-5211-110
HTF50 NI1000		1101-6030-9211-110
HTF50 NITK		1101-6031-0211-110
HTF50 LM235Z		1101-6032-1211-110
HTF50 NTC1,8K		1101-6031-2211-110
HTF50 NTC10K		1101-6031-5211-110
HTF50 NTC20K		1101-6031-6211-110

THERMASGARD® HFTM-SD

Sleeve sensors with temperature measuring transducer,
calibratable, with multi-range switching
(NL = 50 mm, cable material: PVC, cable length: 1.5 m, with enclosure)

Type / WG01B	Output	Item No.
HFTM-SD	**active**	**IP43**
HFTM-SD-U	0 -10 V	1101-6161-0219-920
HFTM-SD-I	4...20 mA	1101-6162-0219-920

THERMASGARD® RTF1-SD

Room temperature sensors without operating elements

Type / WG03B	Output	Item No.
RTF1-SD xx	**passive**	**IP30**
RTF1-SD PT1000		1101-40D0-5000-000
RTF1-SD NI1000		1101-40D0-9000-000
RTF1-SD NITK		1101-40D1-0000-000
RTF1-SD LM235Z		1101-40D2-1000-000
RTF1-SD NTC1,8K		1101-40D1-2000-000
RTF1-SD NTC10K		1101-40D1-5000-000
RTF1-SD NTC20K		1101-40D1-6000-000



THERMASGARD® RTM1-SD

Room temperature measuring transducers without operating elements

Type / WG01B	Output	Item No.
RTM1-SD	**active**	**IP30**
RTM1-SD-U	0 -10 V	1101-41D1-0000-200
RTM1-SD-I	4...20 mA	1101-41D2-0000-200



THERMASGARD® MWTF-SD

Mean value / rod / duct temperature sensor
including mounting flange
(Measuring rod: reinforeced thermoplastic tube with anti-kink spring, NL = 3m / 6m)

Type / WG03B	Output	Item No.
MWTF-SD xx	**passive**	**IP43**
MWTF-SD PT1000 3M		1101-3050-5231-200
MWTF-SD PT1000 6M		1101-3050-5261-200

THERMASGARD® MWTM-SD

Mean value / rod / duct temperature measuring transducer,
including mounting flange, calibratable, with multi-range switching
(Measuring rod: reinforeced thermoplastic tube with anti-kink spring, NL = 3m / 6m)

Type / WG01B	Output	Item No.
MWTM-SD-U	**active**	**IP43**
MWTM-SD-U 3M	0 -10 V	1101-3131-0239-90K
MWTM-SD-U 6M	0 -10 V	1101-3131-0269-90K
MWTM-SD-I	**active**	**IP43**
MWTM-SD-I 3M	4...20 mA	1101-3132-0239-90K
MWTM-SD-I 6M	4...20 mA	1101-3132-0269-90K

BASIC

S+S REGELTECHNIK

Range of preferential items permanently available from stock
in standard design with S+S company logo

HYGRASGARD® RFTF-SD

Room humidity and temperature sensors (±2.0%),
calibratable

Type / WG01B	Output	Item No.
RFTF-SD	**active (2x)**	**IP30**
RFTF-SD-U	0 -10 V	1201-4131-1000-000
RFTF-SD-I	4...20 mA	1201-4132-1000-000



HYGRASGARD® KFF-SD
HYGRASGARD® KFTF-SD

Duct humidity and temperatures sensors (±2.0%),
including mounting flange,
calibratable, with multi-range switching

Type / WG01B	Output	Item No.
KFF-SD	**active**	**IP43**
KFF-SD-U	0 -10 V	1201-3181-0000-029
KFF-SD-I	4...20 mA	1201-3182-0000-029
KFTF-SD	**active (2x)**	**IP43**
KFTF-SD-U	0 -10 V	1201-3181-1000-029
KFTF-SD-I	4...20 mA	1201-3182-1000-029



HYGRASGARD® AFF-SD
HYGRASGARD® AFTF-SD

On-wall humidity and temperatures sensors (±2.0%),
calibratable, with multi-range switching

Type / WG01B	Output	Item No.
AFF-SD	**active**	**IP43**
AFF-SD-U	0 -10 V	1201-1121-0000-100
AFF-SD-I	4...20 mA	1201-1122-0000-100
AFTF-SD	**active (2x)**	**IP43**
AFTF-SD-U	0 -10 V	1201-1121-1000-100
AFTF-SD-I	4...20 mA	1201-1122-1000-100





HYGRASREG® KW-SD

Condensation control switches
including strap

Type / WG01B	Output	Item No.
KW-SD	**switching**	**IP43**
KW-W-SD	Changeover contact	1202-1075-0001-020

Range of preferential items permanently available from stock
in standard design with S+S company logo



PREMASGARD® 212x-SD

Pressure, differential pressure and volume flow measuring transducers
(without display), including connection set,
adjustable, calibratable, with multi-range switching

Type / WG01	Output	Item No.
max. – 1000...+ 1000 Pa	**active**	**IP43**
PREMASGARD 2121-SD	0-10 V / 4...20 mA	1301-11B7-0010-000
max. – 5000...+ 5000 Pa	**active**	**IP43**
PREMASGARD 2125-SD	0-10 V / 4...20 mA	1301-11B7-0050-000
max. – 100...+ 100 Pa	**active**	**IP43**
PREMASGARD 2120-SD	0-10 V / 4...20 mA	1301-11B7-0110-000



PREMASGARD® 212x

Pressure, differential pressure and volume flow measuring transducers **with display**,
including connection set,
adjustable, calibratable, with multi-range switching

Type / WG01	Output	Item No.
max. – 1000...+ 1000 Pa	**active**	**IP43**
PREMASGARD 2121 LCD	0-10 V / 4...20 mA	1301-11A7-2010-000
max. – 5000...+ 5000 Pa	**active**	**IP43**
PREMASGARD 2125 LCD	0-10 V / 4...20 mA	1301-11A7-2050-000
max. – 100...+ 100 Pa	**active**	**IP43**
PREMASGARD 2120 LCD	0-10 V / 4...20 mA	1301-11A7-2110-000



PREMASREG® DS 2

Mechanical differential pressure switches for air,
including connection set

Type / WG03B		Item No.
DS2	**Pressure range**	**IP54**
DS-205 F	20 ... 300 Pa	1302-4026-0000-000
DS-205 B	50 ... 500 Pa	1302-4022-0000-000
DS-205 D	100 ... 1000 Pa	1302-4027-0000-000



AERASGARD® KCO_2-SD

Duct CO_2 sensors,
including mounting flange

Type / WG02B	Output	Item No.
KCO_2-SD	**active**	**IP43**
KCO2-SD-U	0-10 V	1501-3160-1001-200



AERASGARD® RCO_2-SD

Room CO_2 sensors,
self-calibrating

Type / WG02B	Output	Item No.
RCO_2-SD	**active**	**IP30**
RCO2-SD-U	0-10 V	1501-61A0-1001-200

You can rely on S+S –
We have the paperwork to prove it!

When it comes to quality, we leave nothing to chance. We make sure of this with systematic quality management and uncompromising checks at our in-house testing centre. In addition, we undergo regular certification by independent inspection authorities and institutions. We are very proud that our quality "Made in Germany" also passes the strictest international inspections and tests again and again with flying colours.

Approved Safety

- DIN tested/certified devices
- RoHS conforming materials
- ESD compliant manufacturing
- CE compliance tested by external laboratories

Certified Quality

Our development and production in Nuremberg /Germany is certified by TÜV Thüringen according to DIN EN ISO 9001:2015.

- GOST certificates for exports of all products by S+S Regeltechnik GmbH to the Commonwealth of Independent States and Russia
- EAC certified



S+S REGELTECHNIK



ZERTIFIKAT

CERTIFICATE

EU-Baumusterprüfung (Modul B) - Baumuster - nach Richtlinie 2014/68/EU

Zertifikat-Nr.: Z-IS-TAF-MUC-18-03-2852130-002

Name und Anschrift des Herstellers: S+S Regeltechnik GmbH, Pirnaer Str. 20, 90411 Nürnberg

Prüfbericht Nr.: C-T 1382-01/18 vom 2018-02-26

Geltungsbereich: Sicherheitstemperaturbegrenzer als Ausrüstungsteil mit Sicherheitsfunktion Typ: ETR und KTR (siehe Seite 3) Prüfgrundlagen siehe Seite 3

Fertigungsstätte: S+S Regeltechnik GmbH, Pirnaer Str. 20, 90411 Nürnberg

München, 29.02.2018 (Ort, Datum)

TÜV SÜD Industrie Service GmbH Zertifizierungsstelle für Druckgeräte

Johannes Steigerwald



CERTIFICATE

ZERTIFIKAT

EU Type examination (module B) - production type - according to Directive 2014/68/EU

Certificate No.: Z-IS-TAF-MUC-18-03-2852130-002

Name and address of manufacturer: S+S Regeltechnik GmbH, Pirnaer Str. 20, 90411 Nürnberg

Evaluation report No.: C-T 1382-01/18 dated 2018-02-26

Scope of examination: Safety temperature limiter as safety accessory type: ETR and KTR (see page 3) basis of examination and details see page 3

Manufacturing plant: S+S Regeltechnik GmbH, Pirnaer Str. 20, 90411 Nürnberg

München, 29.02.2018 (Place, date)

TÜV SÜD Industrie Service GmbH Certification Body for pressure equipment

Johannes Steigerwald



СЕРТИФИКАТ

Certificate

Испытание ЕС типового образца (модуль B) в соответствии с Директивой 97/23/ЕС

Certificate No.: Z-IS-TAF-MUC-18-03-2852130-002

Name and address of manufacturer: S+S Regeltechnik GmbH, Pirnaer Str. 20, 90411 Nürnberg

Evaluation report No.: C-T 1382-01/18 dated 2018-02-26

Scope of examination: Safety temperature limiter as safety accessory type: ETR and KTR (see page 3) basis of examination and details see page 3

Manufacturing plant: S+S Regeltechnik GmbH, Pirnaer Str. 20, 90411 Nürnberg

München, 29.02.2018 (Place, date)

TÜV SÜD Industrie Service GmbH Certification Body for pressure equipment

Johannes Steigerwald



ZERTIFIKAT

TIC

für das Managementsystem nach DIN EN ISO 9001:2015

Die regelwerkskonforme Anwendung wurde nachgewiesen und wird gemäß Zertifizierungsverfahren bescheinigt für das Unternehmen

S + S Regeltechnik GmbH
Pirnaer Straße 20
90411 Nürnberg

Geltungsbereich

Entwicklung, Herstellung und Vertrieb von Sensoren, Fühlern und Feldgeräten für die Gebäude-, Versorgungstechnik und Infrastrukturautomation

Zertifikat-Registrier-Nr.: TIC 15 100 21333 — Gültig bis: 2020-06-22, Gültig ab: 2017-07-13

Audit Bericht Nr.: 3330 209P R0

Diese Zertifizierung wurde gemäß TIC-Verfahren zur Auditierung und Zertifizierung durchgeführt und wird regelmäßig überwacht.

TÜV Thüringen e.V. Zertifizierungsstelle für Systeme und Personal

Jena, 2018-07-02



CERTIFICATE

TIC

for the management system according to ISO 9001:2015

The proof of the conforming application with the regulation was furnished and in accordance with certification procedure it is certified for the company

S + S Regeltechnik GmbH
Pirnaer Straße 20
90411 Nürnberg / Germany

Scope

Development, production and sale of sensors, detectors and field instruments for building, supply technology and infrastructure automation

Certificate Registration No.: TIC 15 100 21333 — Valid until: 2020-06-22, Valid from: 2017-07-13

Audit Report No.: 3330 209P R0

This certification was conducted in accordance with the TIC auditing and certification procedures and is subject to regular surveillance audits.

TÜV Thüringen e.V. Certification body for systems and personnel

Jena, 2018-07-02



СЕРТИФИКАТ

TIC

соответствия системы менеджмента требованиям стандарта ISO 9001:2015

В соответствии с правилами сертификации подтверждено выполнение требований стандарта в организации

S + S Regeltechnik GmbH
Pirnaer Straße 20
90411 Nürnberg / Германия

в области:

Разработка, производство и сбыт сенсоров, зондов, регулирующих и контрольных приборов для автоматизации сооружений и инфраструктуры

Регистрационный номер сертификата: TIC 15 100 21333 — Действителен до: 2020-06-22, Действителен с: 2017-07-13

Отчет по аудиту №: 3330 209P R0

Сертификация проведена в соответствии с процедурой аудитирования и сертификации TIC и предусматривает проведение регулярных наблюдательных аудитов.

Орган по сертификации систем и персонала TÜV Thüringen e.V.

Йена, 2018-07-02



DIN CERTCO

ZERTIFIKAT

Zertifikatinhaber	S + S Regeltechnik GmbH, Pirnaer Str. 20, 90411 Nürnberg
Produkt	Temperaturregel- und Begrenzungseinrichtungen für Wärmeerzeugungsanlagen
Typ, Modell	ETR-060, ETR-080, ETR-90140, ETR-1, ETR-0120, KTR-060, KTR-090, KTR-90140, KTR-1, KTR-0120
Prüfgrundlage(n)	DIN EN 14597:2015-02, Zertifizierungsprogramm Temperaturregel- und -begrenzungseinrichtungen für wärmeerzeugende Anlagen (2009-01)
Konformitätszeichen	DIN CERTCO
Registernummer	TR1199
Gültig bis	2023-02-28
Nutzungsrecht	Dieses Zertifikat berechtigt zum Führen des oben stehenden Konformitätszeichens in Verbindung mit der genannten Registernummer. Weitere Angaben siehe Anhang.



DIN CERTCO

CERTIFICATE

Certificate holder	S + S Regeltechnik GmbH, Pirnaer Str. 20, 90411 Nürnberg, GERMANY
Product	Temperature control and limiting devices for heat generating systems
Type, Model	ETR-060, ETR-080, ETR-90140, ETR-1, ETR-0120, KTR-060, KTR-090, KTR-90140, KTR-1, KTR-0120
Testing basis	DIN EN 14597:2015-02, Certification scheme Temperature control and limiting devices for heat generating systems (2009-01)
Mark of conformity	DIN CERTCO
Registration No.	TR1199
Valid until	2023-02-28
Nutzungsrecht	This certificate entitles the holder to use the mark of conformity shown above in conjunction with the specified registration number. See annex for further information.



DIN CERTCO

СЕРТИФИКАТ

Владелец сертификата	S + S Regeltechnik GmbH, Pirnaer Str. 20, 90411 Nürnberg, Германия
Изделие	УСТРОЙСТВА КОНТРОЛЯ И ОГРАНИЧЕНИЯ ТЕМПЕРАТУРЫ
тип, модель	ETR-090090 U, KTR-090090 U
Технические условия на испытания	DIN EN 14597:2015-02, Программа сертификации устройств контроля и ограничения температуры для теплогенерирующих систем (2009-01)
Знак соответствия	DIN CERTCO
Регистрационный номер	TW/TM1241
Действителен до	2023-02-28
Право на использование	Настоящий сертификат дает право на использование вышеуказанного знака соответствия вместе с приведенным регистрационным номером. Дальнейшая информация - см. приложение.

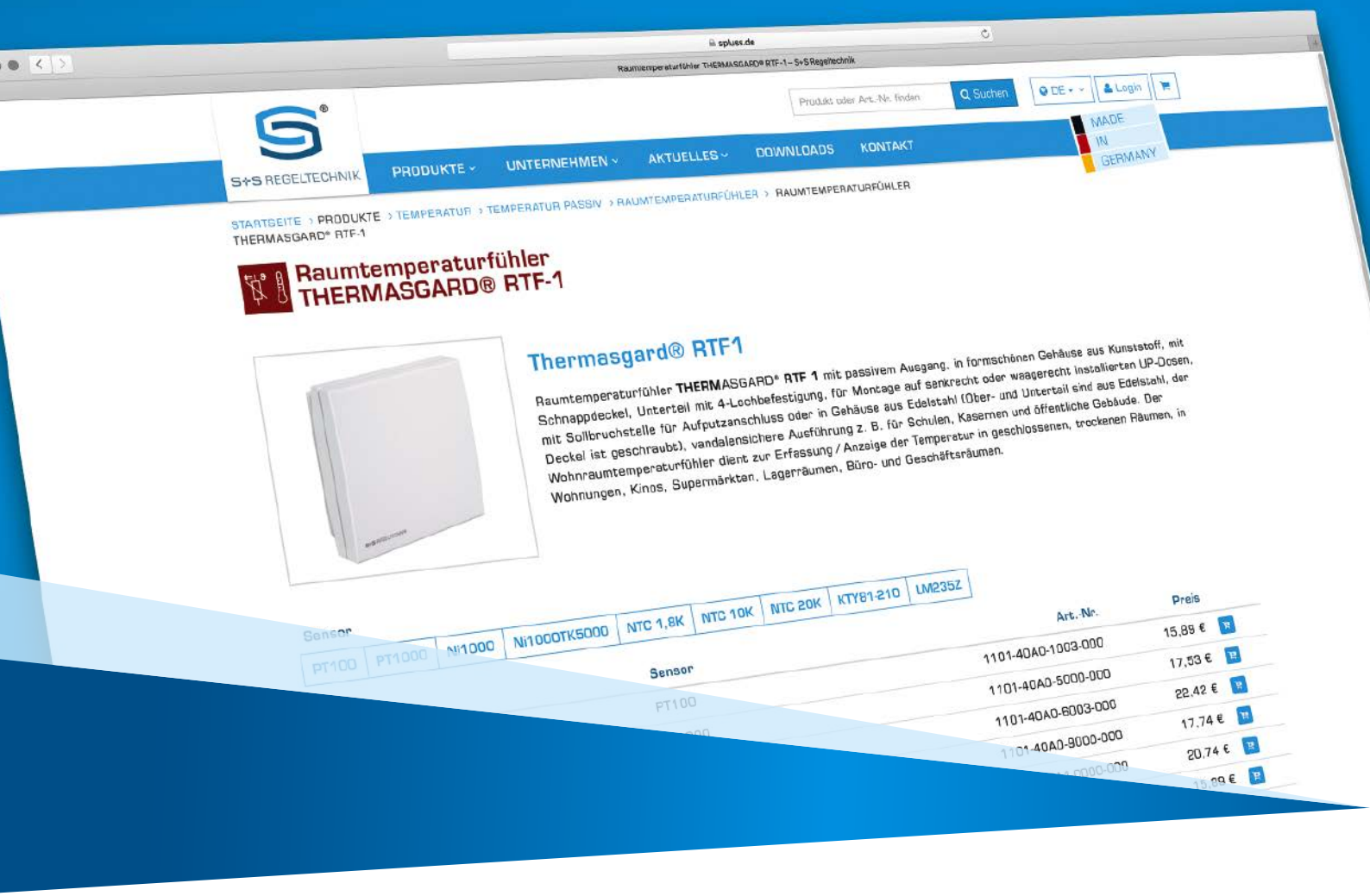

Online Ordering with Ease

Visit our online shop for fast and easy ordering at any time around the clock. All catalogue items are available from stock and will be shipped within 24 hours. We guarantee: No device will be delivered before it has been 100 percent function tested.

www.SplusS.de

24 / 7 ordering

All catalogue items available ex stock

24-hours shipment of catalogue items



At Your Service

All of our staff members are specialists in their jobs and know how to contribute to your satisfaction.
You can reach our motivated team by phone, email or fax.
Don't hesitate to contact us – now!

Contact us by phone:
+49 (0) 911 519 47-0

Write us an email:
mail@SplusS.de

Send us a fax:
+49 (0) 911 519 47-70

S+S REGELTECHNIK

S+S REGELTECHNIK GMBH
PIRNAER STRASSE 20
90411 NUREMBERG / GERMANY

PHONE +49 (0) 911 / 519 47-0
FAX +49 (0) 911 / 519 47-70
FAX +49 (0) 911 / 519 47-73

mail@SplusS.de
www.SplusS.de

FÜHLBARE PRÄZISION